DOOSAN

950106-083011EN

Operation & Maintenance Manual

DIESEL POWER UNIT ENGINE

DM01P, DM01VA

WARNING: Breathing diesel engine exhaust exposes you to chemicals known to the State of California to cause cancer and birth defects or other reproductive harm.

- Always start and operate the engine in a well- ventilated area.
- If in an enclosed area, vent the exhaust to the outside.
- Do not modify or tamper with the exhaust system.
- Do not idle the engine except as necessary.

For more information go to www.P65Warnings.ca.gov.

WARNING: This product can expose you to chemicals including lead, which is known to the State of California to cause cancer and birth defects or other reproductive harm.

For more information go to www.P65Warnings.ca.gov.

Forward

This Operation and Maintenance Manual provides information on engine management and maintenance techniques to customers and technicians of Hyundai Doosan Infracore's DM01-LEP00/LEP01/LEP02/LEP03/LEP04/LEP05/MFP00/MFP01/MFP02/MFP03/MFP04/MFP05 electronically controlled industrial diesel engine.

To provide the best engine to our customers, the DM01-LEP00/LEP01/LEP02/LEP03/LEP04/LEP05/MFP00/MFP01/MFP02/MFP03/MFP04/MFP05 electronically controlled industrial diesel engine is designed to satisfy all requirements for low noise, economic fuel consumption, high speed and durability with the latest technology and quality.

Exact operation and proper maintenance are essential for operating engines for an extended time with optimum conditions and best performance. This Operation and Maintenance Manual provides detailed descriptions of specifications, specified values, defect diagnosis, component diagrams, and drawings for easier and more precise understanding of the product and for proper maintenance and troubleshooting.

With the help of the recommended operation methods and procedures, high-level maintenance techniques and safety of workers can be ensured. Please read and understand this manual before working with our engines.

To ensure best performance and quality as well as to enhance maintenance techniques, Hyundai Doosan Infracore is doing it's best to continuously develop and invest. The design of our product may be changed without prior notice and Hyundai Doosan Infracore shall not be held liable for the failure of this manual to contain all the design changes made to improve the product.

We, Hyundai Doosan Infracore, do our best to provide more convenient and safe maintenance techniques and to meet the requirements of our customers.

If you have any questions or find any errors in this Operation and Maintenance Manual, please do not hesitate to contact us.

Thank you for purchasing our engine and we hope this Operation and Maintenance Manual be helpful for you.

2023. 03.
950106-083011EN
Hyundai Doosan Infracore

* Items exempted from warranty coverage
- Malfunctions resulting from failing to comply with the proper handling instructions, regular inspections, and machine storage techniques specified in the user manual
- Malfunctions resulting from failing to have the machine repaired at a designated dealer or center, or resulting from the use of non-genuine parts
- Malfunctions resulting from unauthorized modifications, changes, or external hardware
- Malfunctions resulting from incorrect operation by the user, delayed repairs, accidents, and natural disasters

* The contents of this operation and maintenance manual are the exclusive property of Hyundai Doosan Infracore. Any unauthorized reproduction, printing and distribution thereof are strictly prohibited.

Table of contents

1. General introduction 1

General information 3

Danger, warning, caution and note 4

Emission information 7

Engine maintenance 10

2. Operation and maintenance 13

Starting and stopping of the engine 15

Break-in period of the engine 16

Operation in winter 17

Inspection and repair of the engine 18

Injection nozzle maintenance 19

3. Performance and specifications 21

Engine specifications and performance 23

Outside drawing of the engine 34

4. Regular inspection 41

General information 43

Regular inspection table 44

Cooling system 46

Lubrication system 50

Fuel system 54

Others/driving system 59

5. About the engine 61

Marking system of units 63

Tightening torque 64

Engine disassembly 66

Engine assembly 78

6. Cooling system 101

General information 103

Water pump 105

Thermostat 108

7. Lubrication system 111

General information 113

Oil pump 115

Oil filter assembly 122

Oil pan 125

8. Fuel system 127

General information 129

Fuel return hose 130

Injector 131

Common rail 136

Fuel injection pump 142

9. Intake/exhaust system 149

Turbocharger 151

Intake manifold 163

Exhaust manifold 168

10. Cylinder block/head 173

General information 175

Cylinder block 176

Cylinder head 178

Valve 179

Rocker arm 182

Tappet and push rod 197

Camshaft 212

Timing gear case 214

Flywheel housing 217

Breather 219

Cylinder head cover 220

Idle gear 226

Lifting hook 231

11. Electric system 235

Electric parts 237

Circuit diagram 238

Switches and sensors 243

Wire harness 248

Electronic control unit (ECU) 249

Starter 252
Alternator 254

12. Others/driving system 257

General information 259
Crankshaft 261
Piston 266
Connecting rod 269
Flywheel 271
Crankshaft pulley 273
Others 275

13. Aftertreatment system 279

Exhaust gas reduction system (Stage-V) 281
Exhaust gas reduction system (Tier-4 Final) 290

14. Accessory system 293

Radiator & Cooling fan 295
Intake & CAC 303
Engine mount 306

1. General introduction

General information 3
General Information 3
Danger, warning, caution and note 4
General Information 4
General Instructions 4
Cautions for Starting the Engine 4
Cautions for Inspection and Repair 4
General Repair 5
Other Safety Instructions and Environmental Pollution 6
Use of Genuine Parts 6
Emission information 7
REGULATION (EU) 2017/654 ANNEX XV (Applies to customers using equipment in EU only.) 7
Engine maintenance 10
Prevention of Damage and Abrasion 10
Prevention of Pollution 10
Handling of Engine Oil 10
Biodiesel Blend Fuel 11
HVO (Hydro treated Vegetable Oil) 11
GTL (Gas To Liquids) 11

General information

General Information

This Operation and Maintenance Manual provides the most efficient methods for engine maintenance as well as quick, efficient methods to determine the cause of engine faults to ensure that any actions taken by professionally certified maintenance technicians are done in the most efficient and efficient way possible. If maintenance is performed by unskilled technicians, or maintenance without the specified tools and facilities, serious bodily injury or critical faults in engine performance may occur.

Regular inspection and maintenance are required to maintain long-term optimal engine conditions and best performance. In the event that a part must be replaced, only genuine parts as defined by the parts the list (PARTS BOOK) should be used. Hyundai Doosan Infracore shall not be held liable for any critical damage or faults which may be caused by the use of unauthorized or remanufactured parts.

The maintenance methods stated in this Operation and Maintenance Manual are the most efficient and safest work procedures. Some work procedures require special tools. For questions about genuine parts and special tools, please contact us.

This Operation and Maintenance Manual includes 'Danger,' 'Warning,' and 'Caution' in order to reduce possible injuries and engine faults which may occur while performing maintenance. If workers do not follow the instructions, critical faults in engine performance and operation or serious bodily injury may occurred. 'Danger,' 'Warning,' and 'Caution' instructions must be followed. However, we inform you that it is not possible to describe all possible and unexpected dangers which may arise while performing engine maintenance.

1. General introduction

Danger, warning, caution and note

General Information

This Operation & Maintenance manual divides maintenance operations such as performing engine checks, trouble-shooting, or diagnosing faults into three categories, "Danger," "Warning," and "Caution." In addition, **Note)** is used to provide additional descriptions and information required for maintenance technicians to successfully operate our engines. The recommended repair methods and 'Danger,' 'Warning,' and 'Caution' can enhance the degree of completion of engine maintenance and prevent bodily injury which may occur to workers. However, this manual cannot predict all possible risks.

⚠ DANGER

Workers must follow this instruction as failing to do so may result in the death or serious bodily harm of workers or others.

⚠ WARNING

Workers must observe instructions, otherwise fatal or serious injuries to workers and other persons may occur.

⚠ CAUTION

Workers must observe this instruction since failing to do so may cause critical faults which can have impact on the engine performance and operation.

Note) Indicates additional description, information, and references for workers' easy understanding.

General Instructions

1. In order to maintain the best long term performance and safety, please read and understand this manual and execute routine inspections and regular inspections.
2. We have divided the content of this manual into causes of bodily injury and damage to assets and causes of pollution.

⚠ WARNING

When a safety accident, such as skin contact with corrosive acids or fuel, burns with hot oil, exposure of eyes to fuel or antifreeze, occurs while starting, inspecting, or repairing an engine, see a doctor immediately.

Cautions for Starting the Engine

1. Before starting the engine, please read this manual carefully and fully understand 'Danger,' 'Warning,' and 'Caution'. If you cannot fully understand it or have any question, please contact us.
2. For safety reasons, attach "Warning" signs around engines in operation to keep people other than workers from accessing the engines. Let engine operators know that they are responsible for the safety of the engine room.
3. Only authorized people may start and operate engines. Unauthorized people should not be allowed to handle engines.
4. Do not access running or rotating parts while the engine is in operation.
5. Be careful not to touch or contact the engine during operation since it becomes hot during operation.
6. Exhaust gas is poisonous. Fully ventilate before starting engine. If the space is airtight, ensure that it is well ventilated.

Cautions for Inspection and Repair

1. Inspection and repair of engine should be performed only when the engine is stopped. Otherwise, burns or safety accidents may occur, so do not perform inspection or repair while the engine is running.
2. If it is absolutely necessary to perform inspection or repair on the operating engine, do not get close to the rotating parts.

⚠ DANGER

When accessories such as necklaces, rings, watches, or gloves become stuck in rotating parts while the engine is running, serious bodily injury may occur.

⚠ WARNING

Do not exchange or disassemble a pipe or horse (from the engine fuel circuit, engine oil circuit, coolant circuit, or compressed air circuit) while the engine is running. The leaked liquid may cause bodily injuries.

3. Use an engine oil drain container that is large enough to prevent the overflow of engine oil while draining engine oil.
4. Open the engine coolant cap after fully cooling the engine to exchange or replenish coolant.

⚠ WARNING

If the coolant cap is opened while the engine is still hot, hot water will spurt out and may cause burns. Open the engine coolant cap after fully cooling the engine.

5. Fuel is highly flammable. Smoking or use of fire around an engine may cause fire.

⚠ WARNING

Only refuel when the engine is stopped.

6. Mark and separately manage the containers for storing coolant from beverage containers for avoiding confusion. See a doctor immediately in case of drinking coolant.
7. Follow the instructions provided by the battery manufacturer when checking or handling batteries.

⚠ WARNING

Battery fluid is corrosive and dangerous because of its explosiveness and toxicity. Therefore, it should only be handled by a skilled technician who specializes in battery fluid.

8. Only certified professional technicians should repair and maintain engines.
9. Only appropriate tools should be used. If the jaws of a wrench are worn out, the wrench might slip during use, causing safety accidents.
10. Do not allow other persons to stay or pass under an engine when lifting the engine with a crane. Before lifting the engine, ensure that there is no one around the engine and reserve enough safety space.
11. Before inspecting or replacing the electrical apparatus, disconnect the battery ground wire first. Connect the battery ground wire after completing all required work for checking or replacing the electrical apparatus in order to prevent a short circuit.
12. Before performing electric welding works, turn off engine, block the power supply to the engine, and remove the wire harness connector connected to the engine control unit (ECU).
13. Do not give any electric or mechanical shocks or perform welding works on the electrical apparatus or the ECU.

General Repair

1. Wait until the engine is properly cooled down before starting work, since you may get burned by the heated engine.
   Before performing fuel line work, check the common rail pressure and engine temperature by using the failure diagnosis device.
2. Disconnect the battery ground wire from to prevent damage of wires and sensors caused by a short circuit.
3. Engine oil and coolant may damage paint and should be stored in a separate container and marked for safe management.
4. Store the disassembled parts in a specified space to avoid damage or pollution.
5. Use specified and special tools for efficient and safe repair.
6. If parts need to be replaced, use only genuine parts for replacement. Using unauthorized or remanufactured parts may cause critical damage and faults in engine performance.
7. Replace parts such as cotter pins, gaskets, O-rings, seal rings, oil seals, and washers with new ones during repairs. Reuse of parts may be the cause of engine faults and engine may not operate properly.
8. Group and store disassembled parts in disassembling order. The strength, shape, and screw torque of bolts and nuts are different according to their assembly position. Please divide and store them accordingly to these characteristics.
9. Clean disassembled parts to remove foreign substances before inspecting or reassembling parts. Use compressed air to clean the oil holes or holes.
10. Thinly spread oil or grease on rotating parts or parts requiring lubrication, before assembling them.
11. If required, use a specified adhesive to assemble gaskets to prevent water or oil from leaking.
12. Assemble bolts and nuts with the specified tightening torque.

13. After completing repairs, conduct a final inspection and perform a test operation to check if all works have been successfully completed.

Other Safety Instructions and Environmental Pollution

Observe the following instructions to protect workers from danger and to prevent the environmental pollution while performing engine repairs.

1. Good ventilation and low humidity should be maintained in the work space.
2. The workspace should be clean, in good order, and no flammables are allowed in the workshop.
3. Smoking is strictly forbidden in the workshop.
4. Workers should wear working clothes, protective goggles, and safety shoes.
5. Workers are not allowed to wear accessories such as necklaces, rings, watches, and earrings.
6. Start the engine in a well-ventilated space and fully ventilate the space before starting engine to prevent carbon monoxide poisoning.
7. Wait until the engine is properly cooled down before starting work, since you may get burned by the heated engine.
8. Do NOT work on rotating or running parts once the engine has been started.
9. Discard oil according to the regulations set forth by the relevant authorities.
10. If engine oil or fuel leaks on the floor or is improperly discharged, serious environmental pollution of sea, river or underground water may occur.
11. Discard the undiluted anticorrosive agent, antifreeze, filter elements, and cartridges as special wastes.
12. Discard coolant and special waste according to the regulations of the appropriate authorities.

⚠ WARNING

Failure to observe the regulations of the relevant authorities violates environmental pollution regulations and may be subject to legal penalties.

Use of Genuine Parts

An engine consists of many parts which are mechanically harmonized. To prevent engine faults in advance and use engines with best performance for a long period, maintenance and replacement of expendable parts should be conducted regularly.

Use of genuine parts is recommended. Using unauthorized or remanufactured parts may cause critical damage and faults to engine for which Hyundai Doosan Infracore shall not be held liable.

Emission information

Tampering with the engine voids the US and EU type-approval of that particular engine.

REGULATION (EU) 2017/654 ANNEX XV (Applies to customers using equipment in EU only.)

Hyundai Doosan Infracore provide to the customer all information and necessary instructions for the correct operation of the engine in order to maintain the gaseous and particulate pollutant emissions of the engine within the limits of the approved engine type or engine family. The customer should operate machine in accordance with the following information and instruction.
The customer should operate machine in accordance with the following information and instruction.

Engine Operation and Maintenance

You must comply with the following things when you operate an engine.

- The engine, including the emissions control system, shall be operated, used and maintained in accordance with the instructions provided to the end users in order to maintain the emissions performance of the engine within the requirements applicable to the engine's category.
- No deliberate tampering with or misuse of the engine emissions control system in particular with regard to deactivating or not maintaining an exhaust gas recirculation (EGR) system should take place.
- This machine is equipped with an engine exhaust emission control system. The operator is responsible for proper operation and maintenance of the emission controls system. For details, see "Engine Exhaust Emission Control System" in the Operation and Maintenance Manual.
- It is essential to take prompt action to rectify any incorrect operation, use or maintenance of the emissions control system in accordance with the rectification measures indicated by the warnings referred to "Malfunctions & Inducement"
- Where the engine is to be operated within the Union on diesel or non-road gas-oil, a fuel with sulphur content not greater than 10 mg/kg (20 mg/kg at point of final distribution) cetane number not less than 45 and a FAME content not greater than 8% v/v shall be used.
- Use the correct lubrication oil to maintain the performance of the emissions control system. For details, see "Engine Oil Standards" in the Lubrication system.
- Maintain in accordance with the scheduled emission-related maintenance requirements. For details, see "General Conditions" in the Regular inspection table.

Malfunctions & Inducement

The operator will be informed by the operator warning system when the emission control system does not function correctly. Ignoring the operator warning signals will lead to the activation of the operator inducement system, resulting in an effective disablement of machine operation.

Operator Warning System & Inducement

Diagnosis		Warning symbols	Action	
Functions	**Detection targets**		**Low level inducement**	**Severe level inducement**
NOx control diagnosis (NCD)	Impeded EGR		36hr after warning, Torque reduction 25%	64hr after low level inducement, Torque reduction 50% & engine rpm reduction 60%
	Tampering			
Particulate control diagnosis (PCD)	Removing of DPF	Check engine lamp (It's up to the decision of Vehicle maker(s))	PCD related faults are stored in ECU ROM from fault healing during 40 warming up cycle. (=Typically over 20 hours engine operation). Authority must have capability to confirm. (Can be through service tool)	
	Malfuction and tampering in PCD			

Malfunction Table

(P: Plausibility fault, E: Electric fault)

Component	Fault detection type	Actions after fault confirmation						Fault code			
		Check engine lamp activation	Depends on NCD inducement level	Torque reduction (level1 30%)	Torque reduction (level2 50%)	Speed limit	Engine stop	P-code	SPN	FMI	NCD or PCD
EGR	P	ON	●					P0C17	27	20	N
	E	ON	●					P2143	2791	5	N
	E	ON	●					P2145	2791	3	N
	E	ON	●					P2144	2791	4	N
	P	ON	●					P042	27	1	N
	P	Flashing	●		●			P042E	27	0	N
	P	ON	●					P0C18	27	22	N
	P	ON	●					P0C19	27	23	N
	E	ON	●	●				P0406	27	3	N
	E	ON	●					P0407	27	4	N
MAF sensor	P	Flashing	●		●			P00BE	132	21	N
	E	ON	●	●				P0100	132	19	N
	E	ON	●	●				P0103	132	3	N
	E	ON	●	●				P0102	132	4	N
	P	ON	●	●				P049B	3236	0	N
	P	ON	●	●				P0408	3236	16	N
Intake manifold pressure & Temperature sensor	E	ON	●	●				P0108	102	3	N
	E	ON	●	●				P0107	102	4	N
	E	ON	●					P00AD	105	3	N
	E	ON	●					P00AC	105	4	N
Coolant temperature sensor	E	ON	●	●				P0118	110	3	N
	E	ON	●	●				P0117	110	4	N
Exhaust manifold temperature sensor	E	ON	●					P0546	2789	3	N
	E	ON	●					P0545	2789	4	N
DPF differential pressure sensor	P	ON						P3052	3251	13	P
	P	ON		●				P1454	3251	18	P
	E	ON		●				P2455	3251	3	P
	E	ON		●				P2454	3251	4	P
DPF inlet temperature sensor	E	ON						P2034	3242	11	P
	E	ON						P2033	3242	3	N, P
	E	ON						P2032	3242	4	N, P

The Value of the Carbon Dioxide (CO_2) Emissions

This CO_2 measurement results from testing over a fixed test cycle under laboratory conditions a(n) (parent) engine representative of the engine type (engine family) and shall not imply or express any guarantee of the performance of a particular engine.

Engine family name	DM01VA
NRSC CO_2	761.5 g/kWh
NRTC CO_2	813.7 g/kWh

Engine maintenance

Prevention of Damage and Abrasion

Using an engine for any purposes other than the designed purpose may cause critical faults in engine performance for which Hyundai Doosan Infracore shall not be held liable. For details concerning the usage and purpose of the engine, please direct questions to our Sales Team. Do not adjust, convert, or change the ECU without our authorization.
If a problem is found in an engine, figure out and solve the cause to prevent the critical faults in advance.
Use of genuine parts is recommended. Using unauthorized or remanufactured parts may cause critical damage and faults to engine for which Hyundai Doosan Infracore shall not be held liable.
Consider the following while managing engines.

1. Use clean, specified, and qualified fuel only. Use fuel recommended in this Operation and Maintenance Manual.

⚠ CAUTION

Using inappropriate or unspecified fuel may cause critical damage and faults in engine performance.

2. Do not operate an engine without lubrication oil or coolant. Use only the products (engine oil, cooling water, anticorrosive agent, and etc) recommended by Hyundai Doosan Infracore.
3. Always keep surroundings of the engine clean.
4. Use fuel recommended in this Operation & Maintenance manual.
5. Conduct inspections and exchanges regularly according to the regular inspection table.
6. If the engine is overheated, do not stop it immediately, but operate it at idle status for five minutes or more to lower the engine temperature to the proper level.

⚠ WARNING

If the radiator cap is opened while the engine is still hot, hot water will spurt out and may cause burns.

7. Check the engine oil level on a flat surface. Do not exceed the maximum on the oil level gauge.

⚠ CAUTION

Immediately replenish engine oil when the engine oil level is below the lower limit of the engine oil gauge.

8. If there are gauges for battery, oil pressure and coolant and temperature, check if they indicate a normal status.
9. Do not operate engine without coolant.

⚠ CAUTION

Always use coolant mixed with antifreeze. If coolant without antifreeze is used, the coolant may freeze causing the coolant passage in the cylinder block to freeze and damaging the engine.

⚠ CAUTION

Do not spray high-pressure water directly on the engine. It may damage engine parts, electronic parts, and wiring.

Prevention of Pollution

Consider the following to manage engine without causing environmental pollution.

1. Discharge oil and coolant using collection containers.
2. Discard oil and coolant according to the regulations of the relevant authorities.
3. Be careful not to let discharged oil and cooling water flow into the ground or the sewer. Otherwise, serious pollution of the drinking water source may occur.
4. Classify the oil, filters, and filter cartridges as environmental pollution wastes and discards them according to regulations.
5. Classify the antifreeze, cooling water, and anticorrosive agent as hazardous wastes and discards them according to the regulations.

Handling of Engine Oil

Prolonged and repeated contact of skin with engine oil may cause skin to dry out and contract, causing dermatitis.
Engine oil includes substances toxic to the human body.
Handle engine oil by observing the following safety rules:

1. Do not expose skin to new engine oil for a long time.
2. Always wear working clothes and gloves.
3. If skin comes in contact with engine oil, immediately wipe it off with water, soap or hand cleaners.
4. Do not clean skin with gasoline, fuel, thinner, or solvent.
5. Apply a skin protective cream after cleaning from oil.
6. Do not put oil-stained gloves or cloth in ones pocket.

⚠ WARNING

Discard oil according to the regulations set forth by the relevant authorities. Disposing of discharged oil into the ground, sewers, drains, rivers, or the sea will cause serious environmental pollution. Violation of regulations regarding discard of engine oil without observing the handling regulations, will be punished.

Biodiesel Blend Fuel

Note) Biodiesel blend fuel may also be used in this machine. Biodiesel blend fuel must contain no more than five percent biodiesel mixed with ultra low sulfur petroleum based diesel.
This biodiesel blend fuel is commonly marketed as B5/B7 (US/EU) blended diesel fuel. B5/B7 (US/EU) blended diesel fuel must meet ASTM D975 (US Standard) or EN590 (EU Standard) specifications.

Biodiesel blend fuel unique qualities that should be considered before using in engine.

- Cold weather conditions can lead to plugged fuel system components and hard starting.
- Biodiesel blend fuel is excellent medium for microbial growth and contamination that can cause corrosion and plugging of fuel system components.
- Use of biodiesel blend fuel may result in premature failure of fuel system components, such as: plugged fuel filters and deteriorated fuel lines.
- Shorter maintenance intervals may be required, such as: cleaning the fuel system and replacing fuel filters and fuel lines.
- Using biodiesel blended fuels containing more than five percent biodiesel can affect engine life and cause deterioration of hoses, tubelines, injectors, injection pump, and seals.

Apply the following guidelines if biodiesel blend fuel is used:

- Ensure the fuel tank is as full as possible at all times to prevent moisture from collecting in the fuel rank.
- Ensure that the fuel tank cap is securely tightened.
- Biodiesel blend fuel can damage painted surfaces, remove all spilled fuel from painted surfaces immediately.
- Drain all water from the fuel filter daily before operating the engine.
- Do not exceed engine oil change interval. Extended oil change interval can cause engine damage.
- Before vehicle storage: drain the fuel tank, refill with100% petroleum diesel fuel, add fuel stabilizer, and operate the engine for at least 30 minutes.

Note) Biodiesel blend fuel does not have long term stability and should not be stored for more than 3 month.

HVO (Hydro treated Vegetable Oil)

HVO is a synthetic diesel which is manufactured through the hydrogenation of plants and animal fats.
To the user, HVO is reminiscent of diesel in accordance with EN590, apart from HVO having a somewhat lower density.
Hyundai Doosan Infracore approves the use of up to 100% HVO for engines in accordance with the EU standard EN15940.

GTL (Gas To Liquids)

GTL is a synthetic fuel that is often refined from natural gas.
To the user, GTL is reminiscent of diesel in accordance with EN590, apart from GTL having a somewhat lower density and less odour.
Hyundai Doosan Infracore approves the use of up to 100% GTL in accordance with the EU standard EN15940.

- Fuel requirements
  - The properties of diesel fuels can easily change by various factors, under different conditions used by customers. (Particles in atmosphere, moisture in air, temperature change, storage periods, local fuel quality, dirty storage condition, etc..)
  - Biodiesel (BD) is derived from natural oils, and can thus, deteriorate. The deteriorated BD contains acid, sticky substances (sludge), diesel fungi, and etc., which can increase in fuel.
  - These contaminated and deteriorated fuels can cause critical engine troubles, thereby leading to higher maintenance costs. (e.g. fuel filter early clogging, wear/damage of fuel injection equipment, injector inner deposit, piston melting due to injector clogging)
  - 0% BD fuels must be used for emergency generator after a long stand still. (Engine dose will not start due to fuel line and filter plugging, caused by deteriorated BD.)
  - Do not use BD after 3 months from the date of its manufacture.
  - Any problems or risks associated with the use of unsuitable fuels will not be covered by Hyundai Doosan Infracore warranty. (Such claims will not be covered by Hyundai Doosan Infracore warranty)
- Day fuel tank and fuel storage tank (for operation site) system requirements
  - An air breathing device (the pressure/vacuum relief valve or air vent port) should be installed at the clean side of the day fuel tank and the fuel storage tank.
    (i) The end of the air inlet should be protected from dirt/mud/water intrusion.
    (ii) A suitable air/moisture filter system should be included in the tank breathing system.
  - A day fuel tank and a fuel storage tank should be included in the water drain and the contamination cleaning port.
    (i) Drain/clean the sludge, contamination, condensed water inside the fuel tank on a weekly basis.
    (ii) Check the contamination status of the fuel tank and flush with clean diesel on a monthly basis.
  - The amount of condensed water, created due to the difference in temperatures, must be minimized inside the storage tank.
    (i) The fuel tank should be positioned at least 30 cm above the ground.
  - Avoid the entry of air in the fuel tank by adequately designing and installing the tank (e.g. swirl pot).
  - The fuel storage tank (operation site) should have a dirt/water separation filter in the dispensing nozzle. (e.g. 10 micron rating filter)
  - Do not paint the inner surface of the fuel tank when biodiesel is used. (Biodiesel will strip the paint, which will plug the filter and fuel line)

2. Operation and maintenance

Starting and stopping of the engine 15

Preparing for Start 15

Starting the Engine 15

After Starting the Engine 15

During Operation 15

Stopping the Engine 15

ECU Learning after Engine Key Off 15

Break-in period of the engine 16

General Information 16

Break-in Period of a New Engine 16

Check Points 16

Inspection after Starting the Engine 16

Operation in winter 17

Cold Start 17

Preventing Coolant from Freezing. 17

Preventing Overcooling of the Engine 17

Engine Oil 17

Inspection and repair of the engine 18

Checking Engine Parts after Prolonged Operation 18

Inspection and Repair of Turbocharger 18

Intake Unit 18

Exhaust Unit 18

Lubrication System 18

Injection nozzle maintenance 19

Tips for Preventing Internal Clogging of the Injector! 19

Starting and stopping of the engine

Preparing for Start

Check the following before starting the engine for the first time after purchase.

1. Before starting an engine, check the levels of fuel, coolant, and oil and replenish those fluids if required.
2. Check if engine oil level is between the upper and lower limit of the oil level gauge. The upper and lower limit of the oil level gauge indicate the maximum and minimum of the engine oil level.

⚠ CAUTION

When replenishing engine oil, do not exceed the maximum on the oil level gauge. Too much oil may cause damage to the engine.
Refer to the engine specifications or the lubrication system.

3. Be careful not to mix foreign substances in fuel, engine oil, or coolant while adding the fluid, and keep the fluid clean while it is not in use. Use fuel, oil, and coolant recommended by Hyundai Doosan Infracore. Otherwise, critical damage to the engine may occur.

Starting the Engine

Observe the following when starting the engine.
Make sure to check the oil and coolant levels before starting the engine.
When to start engine for the first time, it may not start correctly because of air in fuel system. In this case, please try cranking 2 ~ 3 more times. It leads bleed air in fuel line and the engine will be start well.

1. For a cold start, start the engine after preheating it sufficiently through the glow plug.

After Starting the Engine

1. Immediately after starting the engine, do not increase the rpm abruptly until the engine has warmed up sufficiently. Otherwise, it may increase the load upon the engine and burning may occur at the positions that have not been sufficiently lubricated yet. To prevent this, rotate the engine at idle after starting it to lubricate the turbocharger with oil.
2. Oil, air, or gas leaks may lower the oil pressure. Additionally, oil leaks may cause burning of bearings. As such, if oil, air, or gas leaks occur, check the leaking parts and solve the problem.

During Operation

1. Insufficient oil pressure may cause abnormal wear and burning of bearings and excessive oil pressure may cause leaks.
2. Continuing to operate the engine after noises or vibrations coming from the engine may lead to serious engine damage. As such, if noises or vibrations come from the engine, immediately decrease the rpm to a stop the engine.

Stopping the Engine

Do not suddenly stop the engine if operated under high loads for a long period. If oil burns because of heat sent from the high-temperature turbine blade to the bearing part, the bearing metal and rotating shaft may burn. As such, if the engine was operated under high loads for a long period, sufficiently rotate the engine at idle before stopping it.

ECU Learning after Engine Key Off

1. Metering unit on high pressure pump
- Metering unit on the high pressure pump can make a 'buzzing sound' when key off during 20 ~ 30 seconds.
- This is for fast pressure reduction of high pressure system by metering unit actuation.

2. Throttle valve
- Throttle valve position sensor need to learn close position after key off during 20 ~ 30 seconds.

3. E-feed pump
- E-feed pump with pressure sensor operates after key off during 15 ~ 20 seconds for diagnostic.
- It doesn’t work E-feed pump without pressure sensor.

Break-in period of the engine

General Information

Hyundai Doosan Infracore engines are subjected to a final approval test to ensure the provision of high quality engines before being shipped to ensure the best quality possible. However, engines are not operated for a long period of time in this test. Therefore, new engines require a break-in period of during the initial 50 hours after delivery. By properly breaking-in an engine, the highest levels of engine performance can be maintained long-term.

Break-in Period of a New Engine

If the engine's bearings are not properly broken in, they may be easily damaged and the lifetime of the engine may be shortened by overloading or high-speeds. In order to prevent this, please follow the guidelines below for the initial 50 hours after delivery of new engine.

1. Fully warm up the engine until the engine temperature reaches normal operation condition, before starting operation of the engine.
2. Do not overload the engine or operate it at excessive RPM.
3. Do not operate the engine with high speed at idle.
4. Do not rapidly start up or stop the engine.
5. Operate the engine with less than 70 % of the engine load.
6. Inspection, check, and repair of engines should be managed by officially-certified technicians at certified service centers in compliance with corresponding rules.

Check Points

Check the following during the break-in period of a new engine.

1. Periodically check if the engine oil level is between the minimum and maximum limit of the oil level gauge.

Note) The amount of engine oil has a significant effect on engine performance, so check it every day check the engine oil in the following order.

1. After parking in a flat area, warm up the engine to normal operating temperature.
2. Turn off the engine, wait until the oil is stabilized (about 5 minutes), pull out the level gauge, wipe it off with a clean cloth, and insert the level gauge again.
3. Pull out the level gauge and check.

⚠ CAUTION

If you cannot accurately check the oil level through the oil level gauge, rotate the oil level gauge to 180 degree, put it in the guide tube, and then pull it out again to check.

2. If the oil indicator lamp on the apparatus is turned on or blinks, the oil pressure may be insufficient. In this case, check the oil level and replenish the oil if required. When replenishing engine oil, do not exceed the maximum on the oil level gauge. If the oil level is normal, check other related parts such as the oil pressure sensor, oil pump, or oil line.

⚠ CAUTION

The oil pressure may increase with high rpm and decrease with low rpm. In addition, the pressure of cold oil may be higher at a specific rpm than of warm oil. Use oil with the correct specifications for the engine.

3. Check the level in the coolant tank and add more if necessary.
   Coolant is added as follows: Add coolant → Run the engine for one or two minutes → Add coolant if tank is lower than minimum level → Run the engine for one or two minutes → (Add more if necessary)

⚠ CAUTION

If engine oil and oil filter need to be replaced, use only the genuine engine oil and parts recommended by Hyundai Doosan Infracore.

Inspection after Starting the Engine

The output torque may be limited if the engine oil pressure is abnormal. Check the P-CODE with a diagnostic tool or OBD. In addition, make sure that the recharge alarm indicator lamp of the alternator is turned off while the engine is operating.

1. Tightly connect the +/- terminals to prevent gaps between them. The sheath of battery connection cables should not be damaged or broken.
2. If the recharge alarm indicator lamp suddenly turns on or blinks during engine operation and the engine stops, fix the fault of the electric apparatus.
3. If color or odor of exhaust gas is unusual during operation, stop the engine, diagnose the cause and fix the fault.
4. Check the engine status through the alarm indicator lamp and gauges mounted on the apparatus during operation.

Operation in winter

Cold Start

Periodically check for frozen coolant and viscosity of lubrication oil.

⚠ CAUTION

- **Check the battery is good condition. If battery condition is not good, please fully charge the battery before trying to start.**
- **Operate starter motor upto 30 second while engine speed (rpm) is not over 300 rpm. If engine rpm is below 100 rpm up to 20 seconds, stop operating starter motor and try again from preheating.**

Perform the cold start in the following order.

1. Turn the key switch to 'Preheat' and then the preheat lamp will operate for about 20 seconds.

Note) If the coolant is below 10°C, preheater will operate automatically.

2. When the preheat lamp switches off, turn the key switch to 'Start' to start the engine.

Note) Preheater heats about 180 seconds after starting the engine in order to quick reducing the exhaust white smoke.

Preventing Coolant from Freezing.

When only water used as coolant without mixing with antifreeze, corrosion in the engine, degradation of cooling efficiency, and freezing of the engine in winter may occur. If the engine is not operated for a long period during cold weather fully discharge the coolant from the engine. Freezing of coolant leads to critical damage to the engine. Please use a mixture of coolant with antifreeze at revised ratio when replacing or replenishing the coolant. The antifreeze prevents coolant from freezing.

Preventing Overcooling of the Engine

When the engine is cooled below the normal operating temperature, thermal efficiency is lowered and fuel consumption as well as abrasion of the cylinder liner may increase. Therefore, the engine should be operated within the normal operating temperature. If the engine has been sufficiently operated, but the temperature of coolant remains below the normal operating temperature, check the water temperature controller or other parts related to the cooler.

Engine Oil

When the viscosity of engine oil increases due to its low temperature during cold weather or in areas with cold climate, the rpm may not be stable after starting the engine. To prevent this, replace the oil with engine oil for cold weather or areas with cold climate. When replacing engine oil, Use only engine oil recommended by Hyundai Doosan Infracore.

Inspection and repair of the engine

Checking Engine Parts after Prolonged Operation

Wear, corrosion, or degradation of engine elements and assemblies may occur, causing lowered performance of engine parts. To maintain high engine performance, check the engine after prolonged operation to enhance the durability of the engine.

Unexpected faults may occur in some weak engine parts after normal operation of the engine, when operation time is prolonged. In this case, it is difficult to maintain high engine performance by simply repairing some parts. We recommend the entire part be replaced or repaired in order to find out the causes more accurately and maintain high engine performance.

To prevent engine failure in advance and use the engine safely for a long period, perform periodic replacements and inspections.

It is recommended to perform engine adjustments and preventive inspections during spring after the engine was exposed to winter or cold weather. This allows economic, long-term use of the engine without faults.

As the following parts affect the engine output and performance, these parts should be regularly checked and inspected.

1. Parts affecting intake and exhaust
- Air filter
- Intercooler
- Turbocharger, silencer
- EGR cooler and valve
- Other parts
2. Parts affecting lubrication and cooling
- Air filter
- Oil filter
- Antifreeze
- Other parts

Inspection and Repair of Turbocharger

As performance of turbocharger significantly affects the engine performance, regular inspections and repairs should be performed and inspection and maintenance regulations should be observed.

Intake Unit

Be careful when handling the air filter in the intake unit. If oil level of the wet air filter is below the specified level, filtering performance is degraded. On the other hand, if the oil level is higher, oil may flow into the case, and it may become polluted. In regards to the dry air filter, intake resistance should be small to ensure the smooth intake of air.

Exhaust Unit

If exhaust emission is leaked from the part connecting the exhaust tube and the turbocharger, the turbocharger efficiency is lowered, causing degraded engine output and, if serious, burning of related parts. As parts related to exhaust and turbocharger are used at high temperature, be careful not to mix the bolts and nuts with other parts when performing repair.

Lubrication System

Inspection and replacement of the lubrication system should be performed according to the replacement schedule of oil and oil filter. Overheated engine oil can affect not only the engine itself, but also the engine performance.

Injection nozzle maintenance

Clogging (lacquering or coking) of the valve and nozzle within the injector is a phenomenon where fuel is not injected normally due to an influx of prohibited chemical components into the fuel which accumulate on the valve or needle inside the injector.

Clogging of the valve/nozzle inside the injector can cause exhaust smoke, decreased power and failure to start the engine.
If you suspect that the valve/nozzle within the injector is clogged, we recommend adding the Hyundai Doosan Infracore fuel additive (500203-00127) immediately and proceeding with working under a load in order to effectively resolve the issue.
Using the fuel additive (500203-00127) in the following cases as well can prevent injector clogging so we recommend using the fuel additive regardless of the suitable intervals for usage.

- When reactivating machinery which has not been used for an extended period of time (over one month)
- When using fuel with a high content of biodiesel
- When the quality of the fuel in use is suspect

The Hyundai Doosan Infracore fuel additive (500203-00127) is effective in eliminating and preventing the accumulation of such deposits.
The proper amount to use is 100 mL per 100 L of fuel, and it should be used every 500 hours.

Tips for Preventing Internal Clogging of the Injector!

- Only use B7 or lower biodiesel.
  The oxidation stability of biodiesel drops and may lead to a rapid change in the properties of the fuel. It also contains a large amount of acidic material so it may corrode metal in the engine.
- Avoid using fuel which has been stored for an extended period of time.
  Fuel which has been stored for an extended period of time begins to oxidize and may cause clogging in the injector.
- If the problem persists, change service stations.
  There is a strong correlation between the management of fuel at the service station and clogging within the injector.
- Add the Hyundai Doosan Infracore fuel additive (500203-00127) whenever replacing the fuel filter. Avoid using any fuel additives except the genuine Hyundai Doosan Infracore fuel additive.
  Using unverified additives may even cause problems in the injector.

For customers overseas, we recommend using commercially available equivalents of genuine Hyundai Doosan Infracore products.

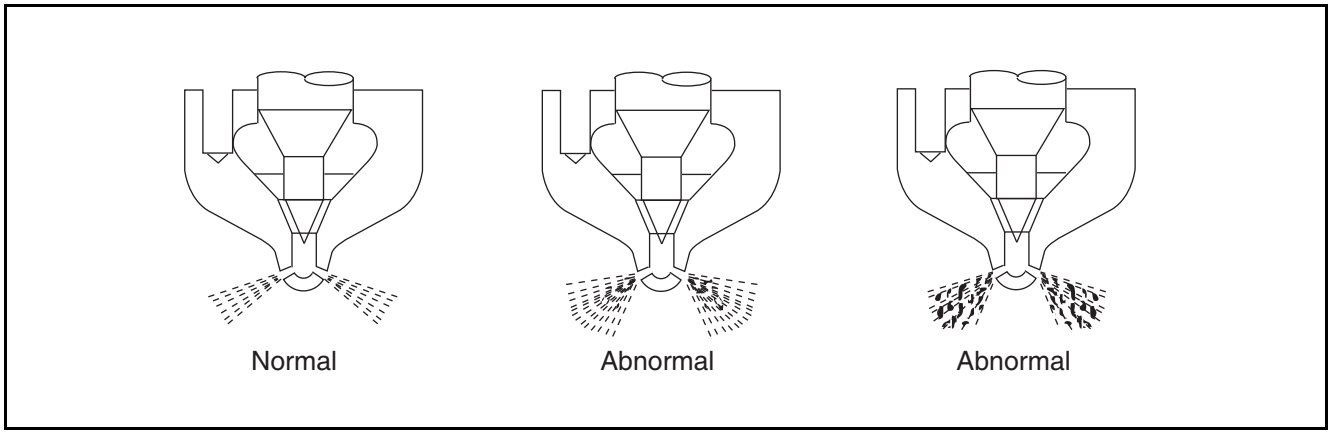

EFM1006I

3. Performance and specifications

Engine specifications and performance 23
Engine Specifications 23
Engine Performance Curve (DM01-MFP00) 25
Engine Performance Curve (DM01-LEP00) 26
Engine Performance Curve (DM01-MFP01) 27
Engine Performance Curve (DM01-MFP02) 28
Engine Performance Curve (DM01-LEP01) 29
Engine Performance Curve (DM01-LEP02) 30
Engine Performance Curve (DM01-MFP03/LEP03) 31
Engine Performance Curve (DM01-MFP04/LEP04) 32
Engine Performance Curve (DM01-MFP05/LEP05) 33
Outside drawing of the engine 34
Isometric Assembly Drawings 34
Assembly Drawings (Front/Rear) 35
Assembly Drawings (Left/Right) 36
Assembly Drawings (Top/Bottom) 37
Engine Number Engraving 38
Cylinder Block Number Engraving 38
Engraving of Piston Bore Level of Cylinder Block 38
Engraving of Main Bearing Bore Level of Cylinder Block 39
Crankshaft Main Journal Engraving 39
Connecting Rod Engraving 39
Piston Engraving 39
Cylinder Head Gasket Identification 40

Engine specifications and performance

Engine Specifications

Item		Specifications												Remarks
		DM01-LEP00	DM01-LEP01	DM01-LEP02	DM01-LEP03	DM01-LEP04	DM01-LEP05	DM01-MFP00	DM01-MFP01	DM01-MFP02	DM01-MFP03	DM01-MFP04	DM01-MFP05	
General Information														
Engine Type		4-stroke, Inline, Water-cooled, Turbocharged and Air-cooled												
Combustion Chamber Type		Direct Injection												
Cylinder Liner Type		Dry Liner												
Timing Gear System		Gear Driven Type												
Number of Piston Rings		Two Compression Rings and One Oil Ring												
Number of Cylinders		3												
Cylinder Bore		90 mm												
Cylinder Stroke		94 mm												
Total Displacement		1,794 cc												
Compression Ratio		16.9 : 1												
Compression Pressure		25 bar												at 200 rpm
Engine Dimension (L x W x H)		728 x 574 x 730 mm												
Engine Weight		206 kg												
Direction of Rotation		Counter-clockwise												View from Flywheel
Firing Order		1 - 2 - 3												
Cooling System														
Cooling Type		Radiator												
Capacity of Coolant		3 L												Engine Internal Area
Coolant Pump Type		Centrifugal type driven by belt												
Coolant Temperature Controller	Type	Unit + Housing (Wax-Pellet)												
	Opening Temperature	82°C												
	Fully Open Temperature	97°C												
Coolant Temperature Indicator		Coolant Temperature Sensor Mounted												
Lubrication System														
Lubricating Type		Forced Lubrication System												
Oil Pressure	Idle	above 0.8 bar												
	Max.	above 3.0 bar												

Item		Specifications												Remarks
		DM01-LEP00	DM01-LEP01	DM01-LEP02	DM01-LEP03	DM01-LEP04	DM01-LEP05	DM01-MFP00	DM01-MFP01	DM01-MFP02	DM01-MFP03	DM01-MFP04	DM01-MFP05	
Oil Specifications	Oil Grade	API CJ-4 (500hr interval) / API CK-4 (1,000hr interval)												
	SAE Viscosity	SAE 10W30/40												
Oil Capacity	Max.	6.3 L												
	Min.	2.3 L												
Allowable Oil Pan Inclination Angle (Front/Rear/Left/Right)		35° / 35° / 35° / 35°												
Oil Pump Type		Gear type driven by crankshaft												
Oil Coolant Type		Water-cooled Layered Plate												
Oil Strainer Type		Full Flow (Cartridge)												
Oil Separator Type		Impact (CCV)												
Hydraulic Pressure Indicator		Oil Pressure Sensor												
Fuel System														
Fuel Injection Pump Type		Bosch Common-rail Pump												
Engine Control Type		E.C.U (BOSCH, EDC17C87)												
Delivery Pump Type		Gear Type (With in CP4)												
Nozzle Opening Pressure (Operating Pressure)		1,800 bar												
Injector Nozzle Type		Multi Hole Type												
Fuel Filter Type		Full Flow (Cartridge)												
Cylinder Block/Head														
Valve		Over Head Valve												
Valve Clearance	Intake	0.0 mm												When Cold
	Exhaust	0.0 mm												When Cold
Electric System														
Start Motor	Type	Electronic Press-fit Type												
	Capacity	12.0 V, 2.5 kW												
Preheat System		Glow Plug (12 V x 3 EA)												

Engine Performance Curve (DM01-MFP00)

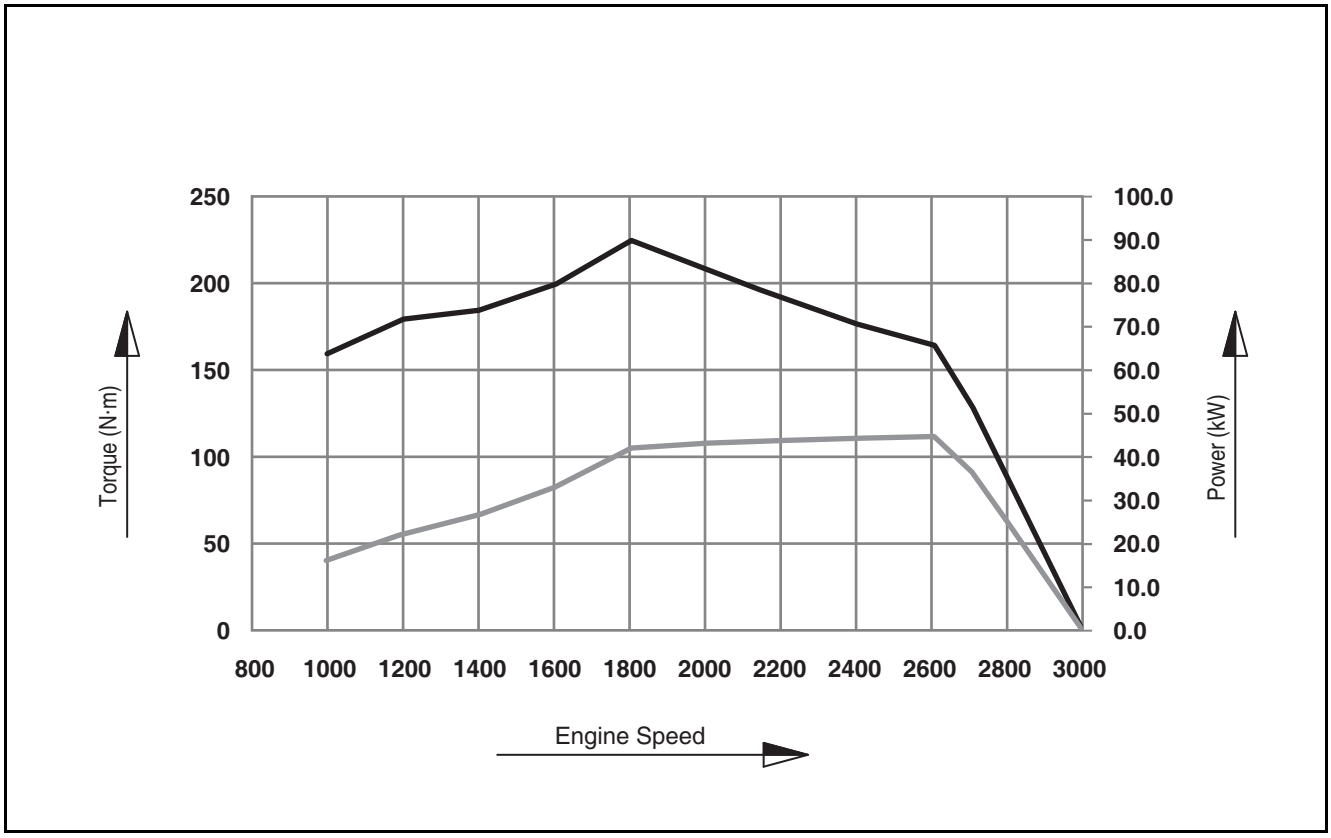

ED18190001

Test evaluation method	ISO8178
Engine output (rated)	45 kW
Torque (Max.)	225 N·m
Specific fuel consumption	226 g/kW.h

Engine Performance Curve (DM01-LEP00)

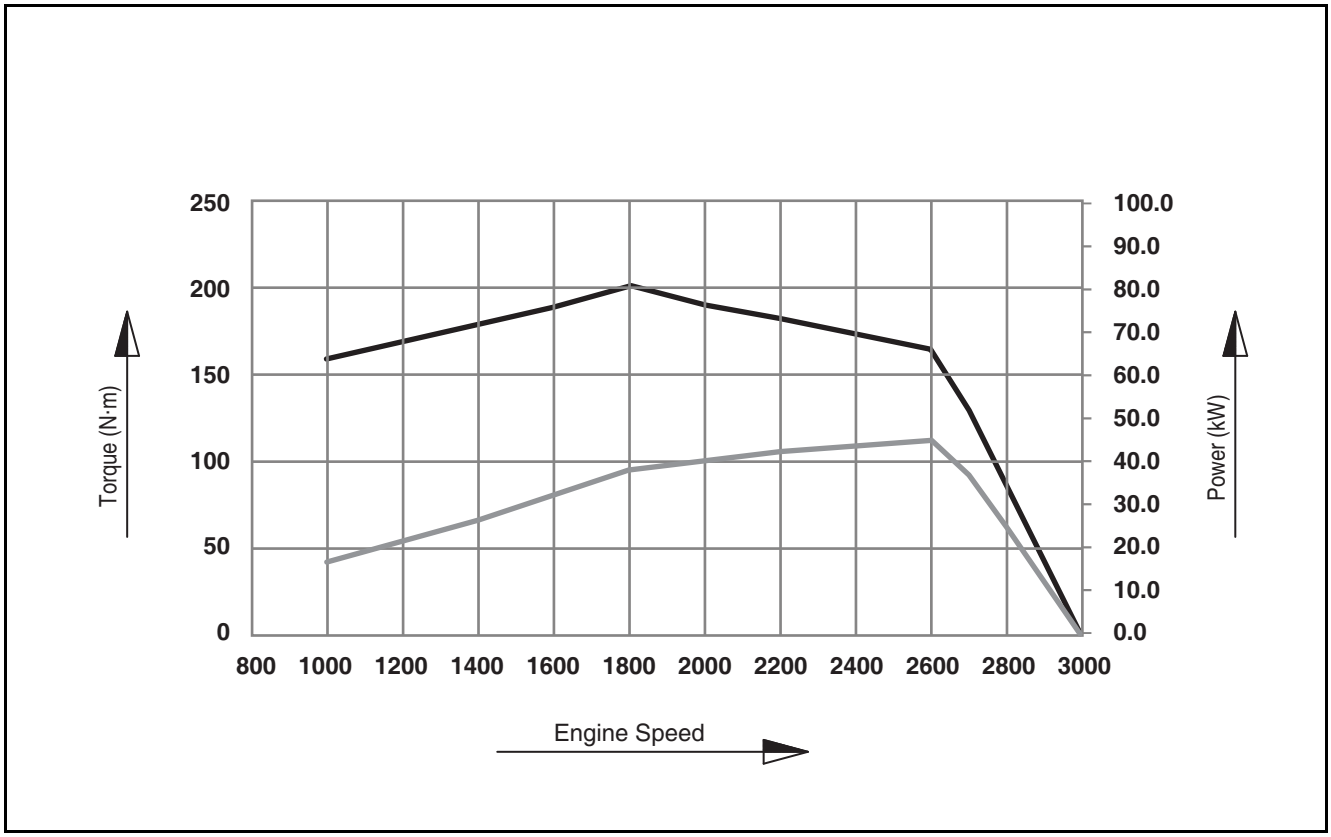

ED18190002

Test evaluation method	ISO8178
Engine output (rated)	45 kW
Torque (Max.)	202 N·m
Specific fuel consumption	226 g/kW.h

Engine Performance Curve (DM01-MFP01)

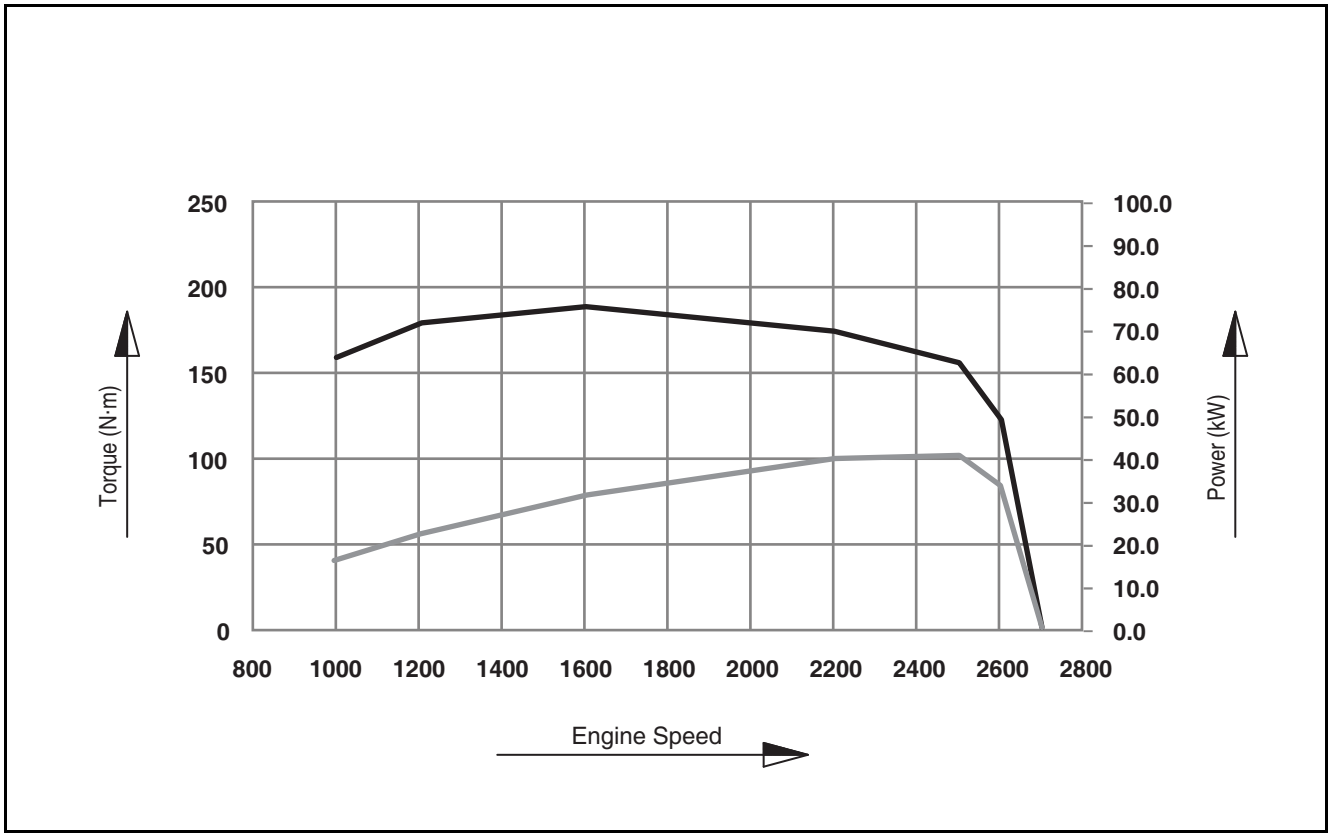

ED18190003

Test evaluation method	ISO8178
Engine output (rated)	41 kW
Torque (Max.)	190 N·m
Specific fuel consumption	226 g/kW.h

Engine Performance Curve (DM01-MFP02)

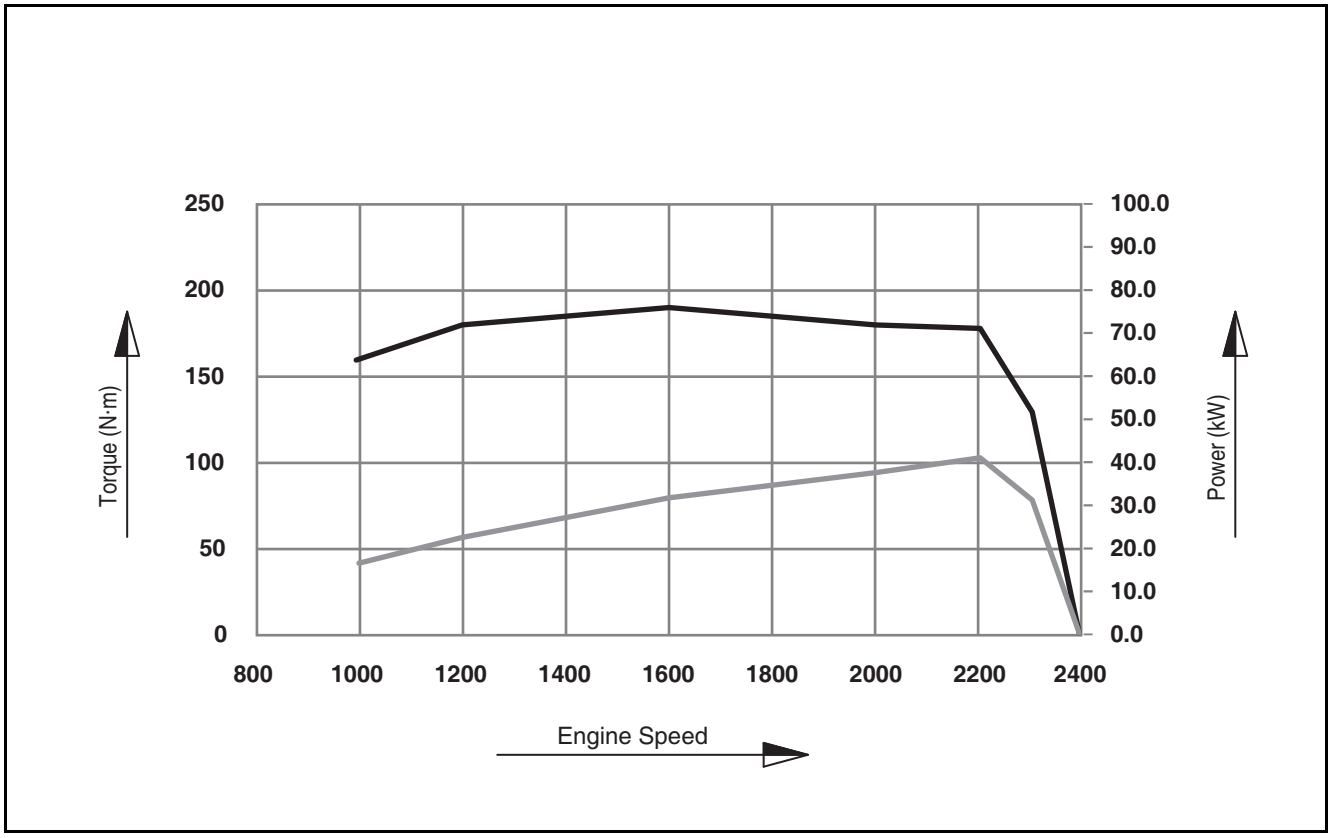

ED18190004

Test evaluation method	ISO8178
Engine output (rated)	41 kW
Torque (Max.)	190 N·m
Specific fuel consumption	223 g/kW.h

Engine Performance Curve (DM01-LEP01)

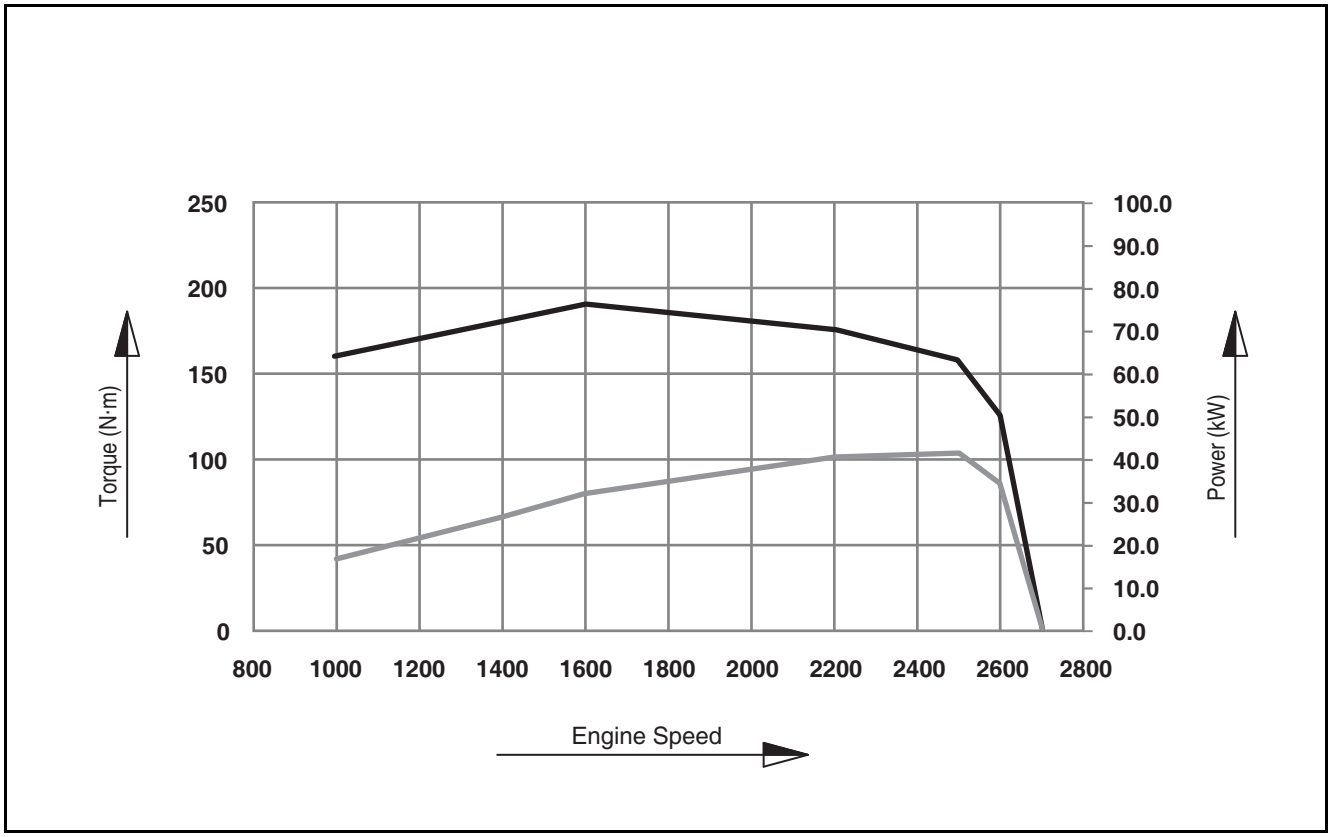

ED18190005

Test evaluation method	ISO8178
Engine output (rated)	41 kW
Torque (Max.)	190 N·m
Specific fuel consumption	226 g/kW.h

Engine Performance Curve (DM01-LEP02)

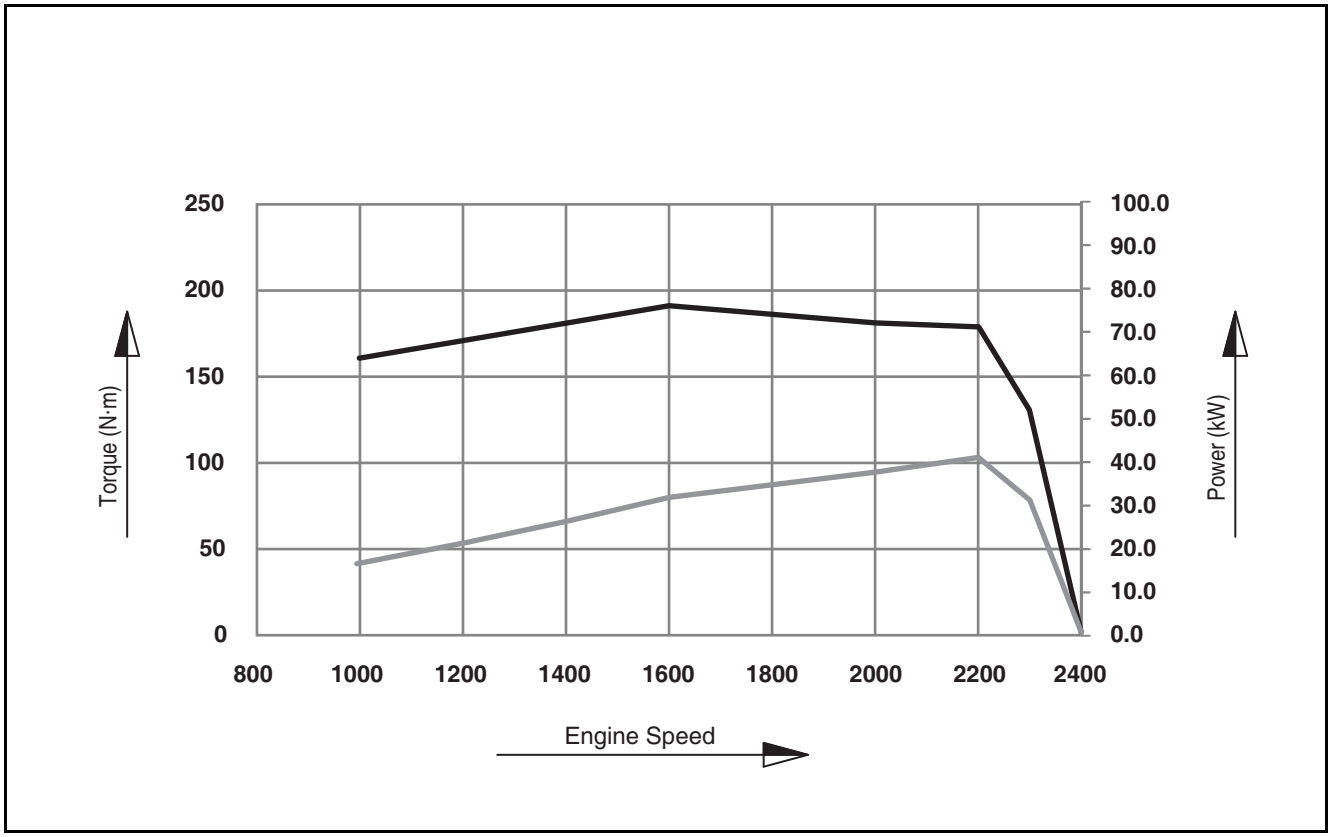

ED18190006

Test evaluation method	ISO8178
Engine output (rated)	41 kW
Torque (Max.)	190 N·m
Specific fuel consumption	223 g/kW.h

Engine Performance Curve (DM01-MFP03/LEP03)

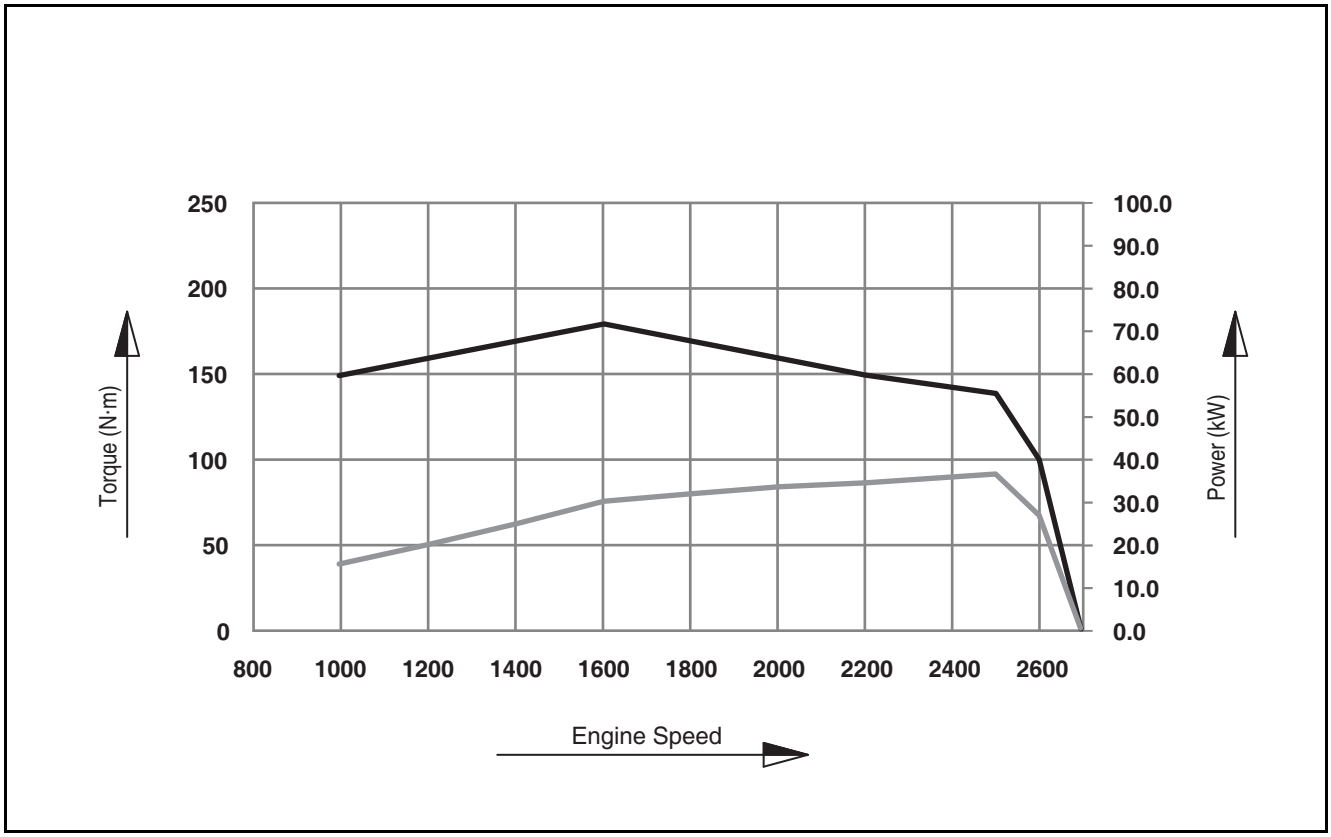

ED18190007

Test evaluation method	ISO8178
Engine output (rated)	37 kW
Torque (Max.)	180 N·m
Specific fuel consumption	225 g/kW.h

Engine Performance Curve (DM01-MFP04/LEP04)

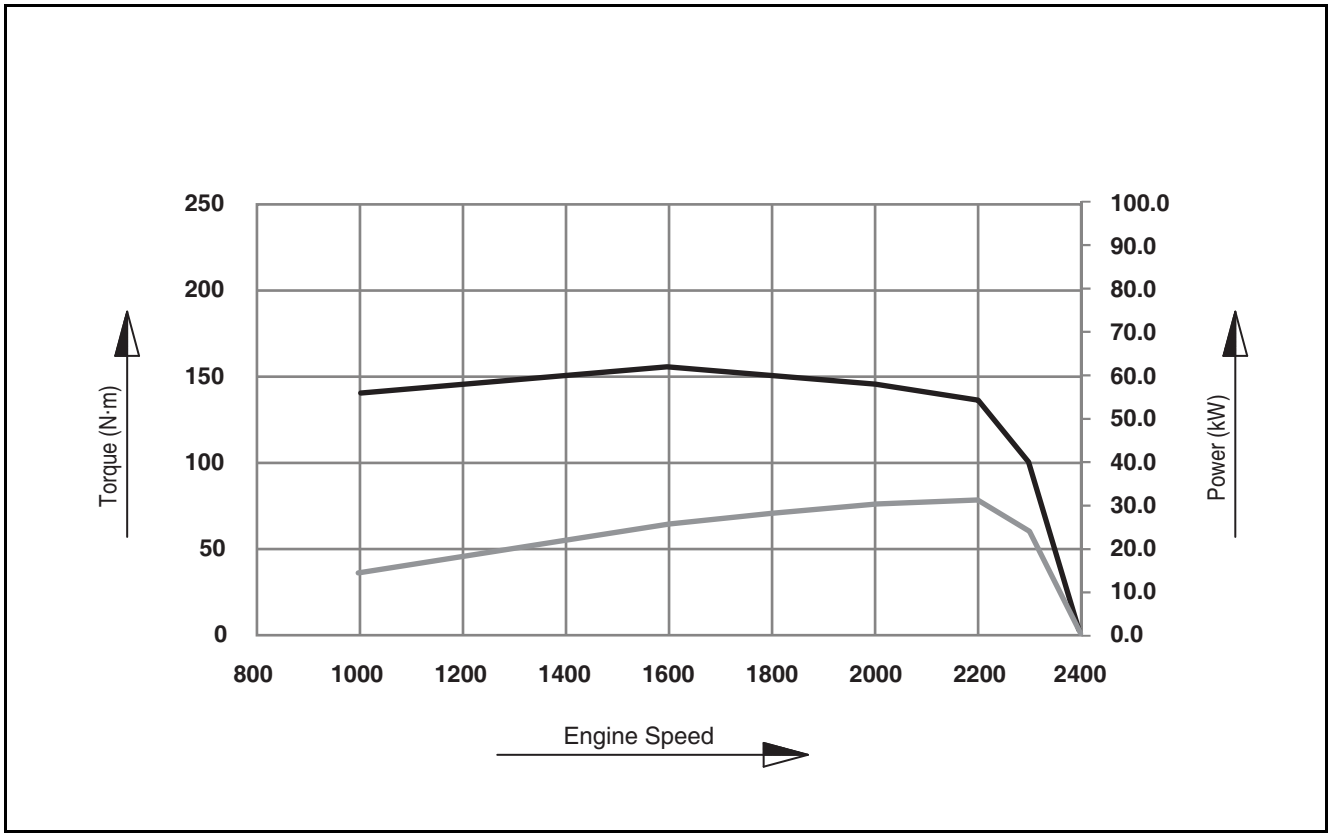

ED18190008

Test evaluation method	ISO8178
Engine output (rated)	31 kW
Torque (Max.)	155 N·m
Specific fuel consumption	227 g/kW.h

Engine Performance Curve (DM01-MFP05/LEP05)

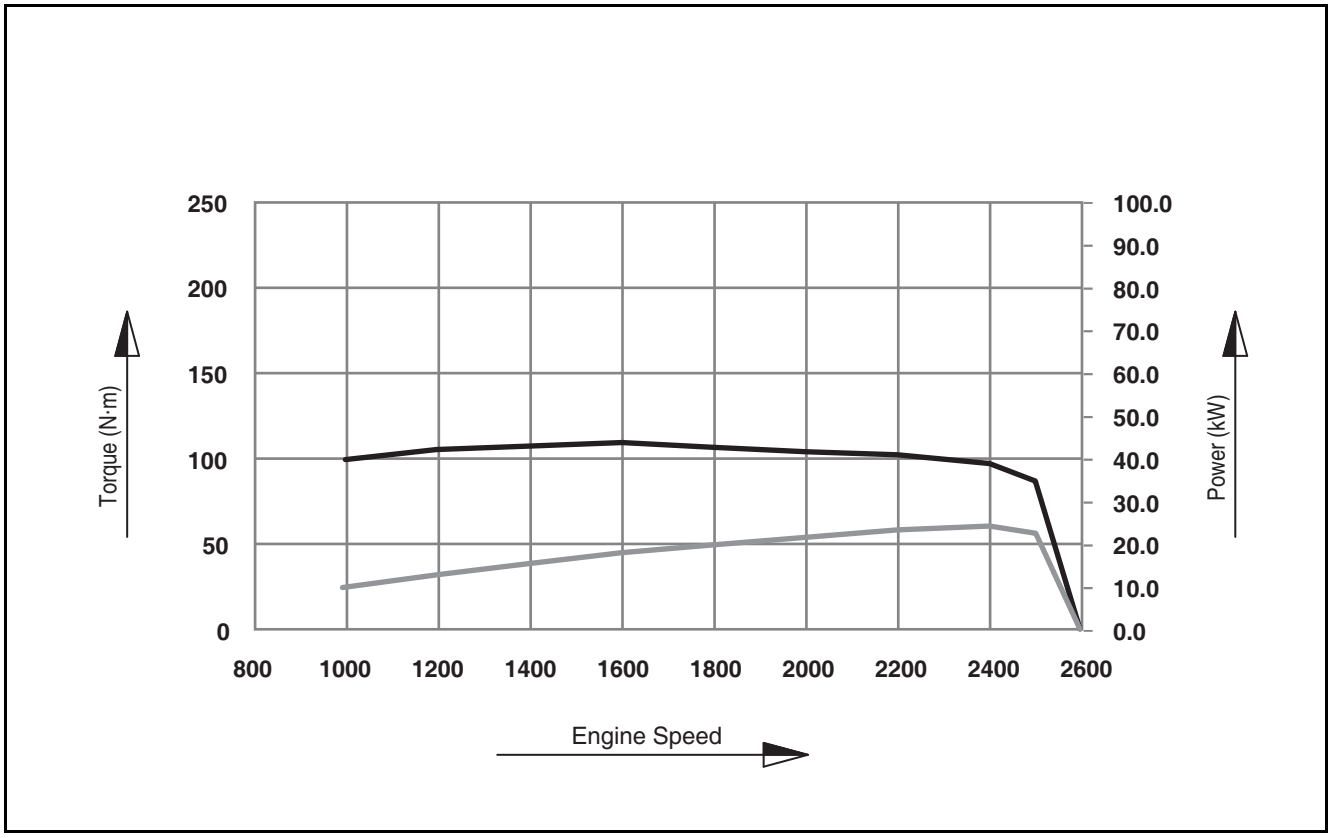

ED18190009

Test evaluation method	ISO8178
Engine output (rated)	25 kW
Torque (Max.)	110 N·m
Specific fuel consumption	239 g/kW.h

Outside drawing of the engine

Note) The images shown represent the standard model; they do not include all models.

Isometric Assembly Drawings

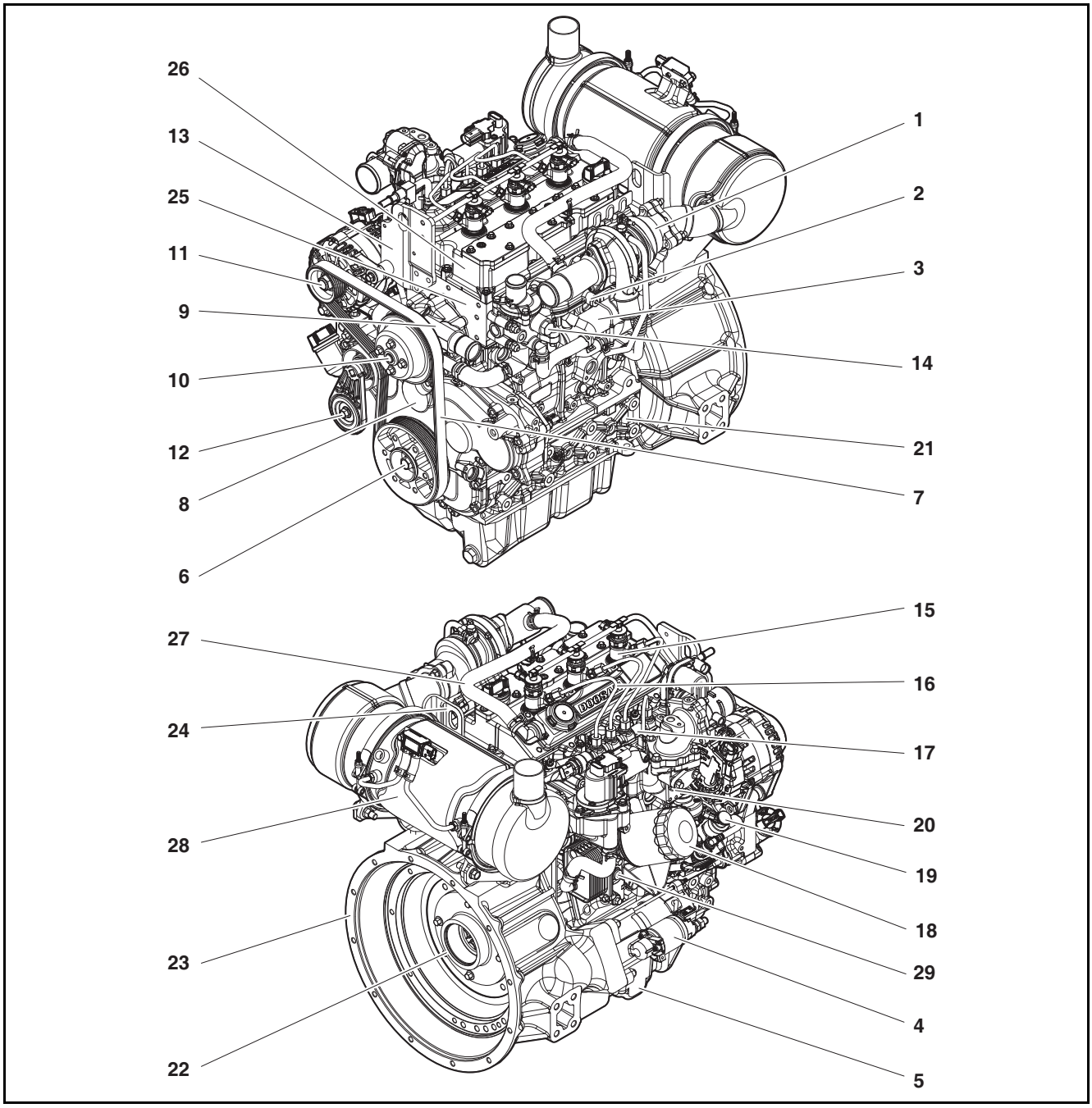

ED18190010

1. Turbocharger
2. Exhaust manifold
3. EGR cooler
4. Starter
5. Oil pan
6. Crankshaft pulley
7. V-belt
8. Timing gear case
9. Coolant pump
10. Coolant pump pulley
11. Alternator
12. Alternator mounting
13. Front lifting hook
14. Thermostat
15. Injector
16. Injection pipe
17. Common rail
18. Oil filter
19. Fuel injection pump
20. Intake manifold
21. Cylinder block
22. Drive plate
23. Drive Plate housing
24. Rear lifting hook
25. Cylinder head
26. Cylinder head cover
27. Breather hose
28. Catalytic muffler
29. Drain coolant

Assembly Drawings (Front/Rear)

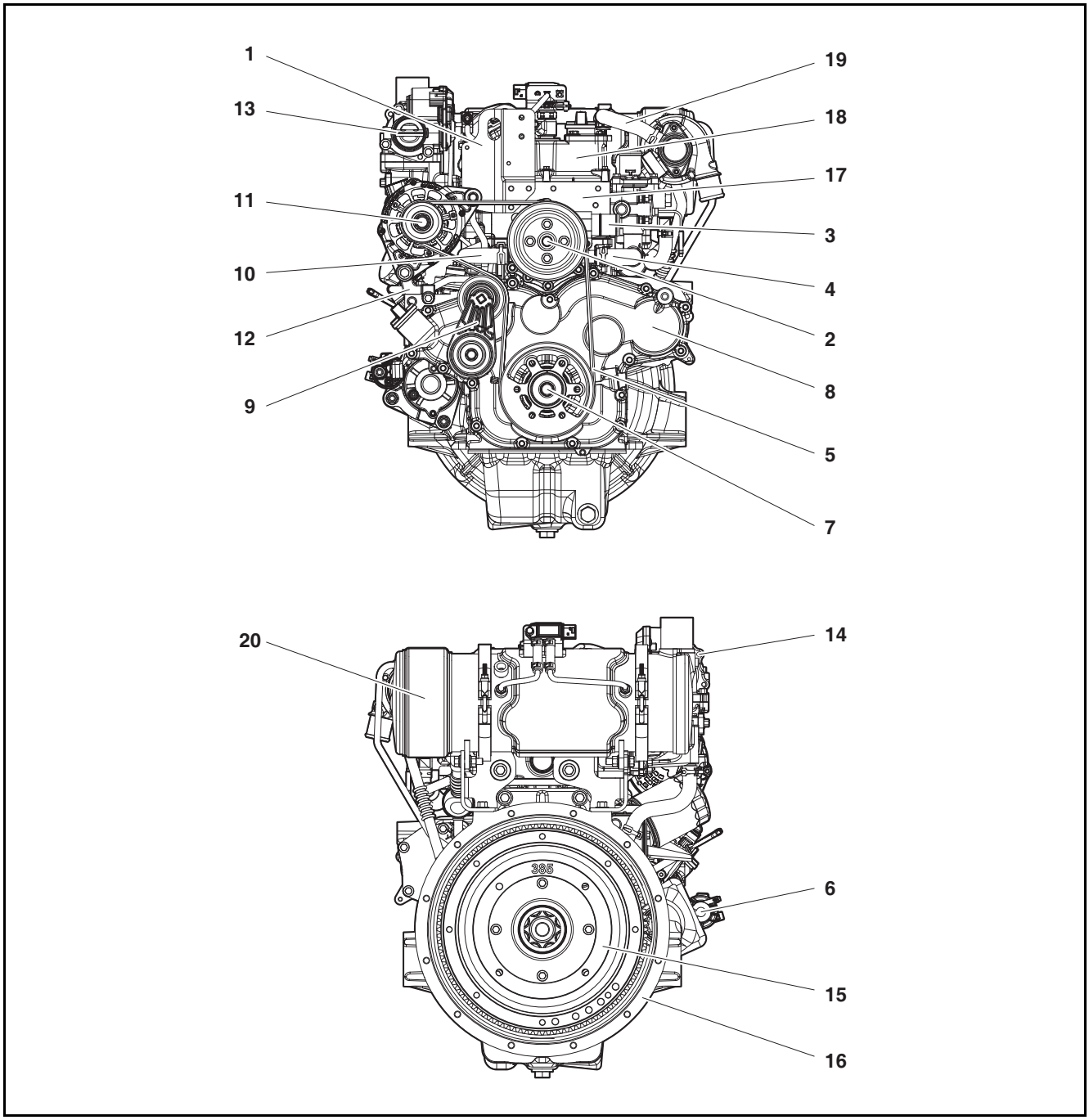

ED181900101

1. Front lifting hook
2. Coolant pump pulley
3. Coolant pump
4. Rubber hose
5. Micro V-belt
6. Starter
7. Crankshaft pulley
8. Timing gear case
9. Auto tensioner
10. Coolant hose
11. Alternator
12. Alternator mounting
13. Throttle (Inlet pipe)
14. Intake stake
15. Drive plate
16. Drive plate housing
17. Cylinder head
18. Cylinder head cover
19. Breather hose
20. Catalytic muffler

Assembly Drawings (Left/Right)

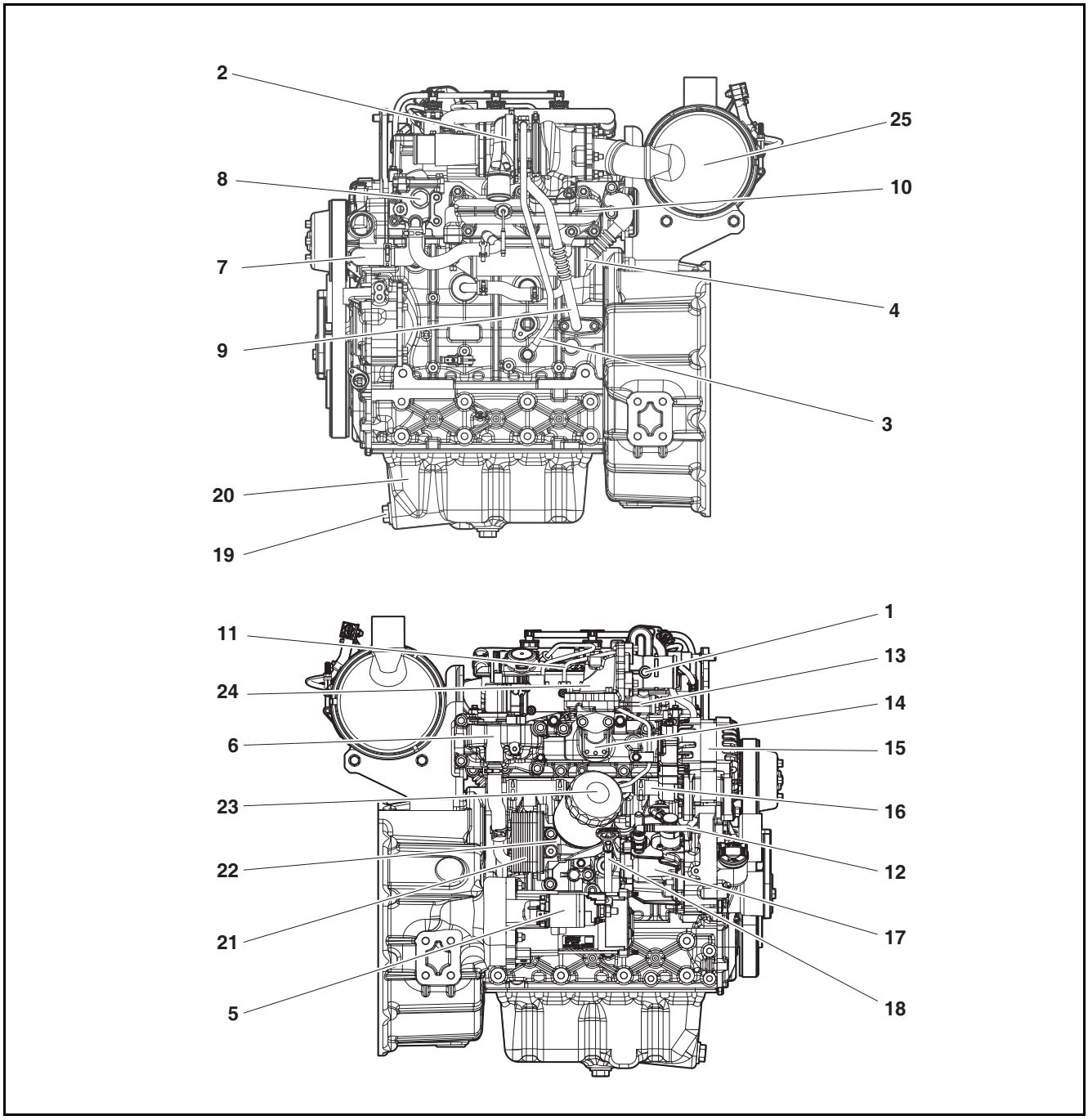

ED18190012

1. Throttle (Inlet pipe)	8. Thermostat	15. Alternator	22. Oil filter module
2. Turbocharger	9. Oil return pipe	16. Coolant hose	23. Oil filter
3. Oil delivery pipe	10. Exhaust manifold	17. Fuel injection pump	24. Intake stake
4. EGR cooler	11. Fuel injection pipe	18. Oil level gauge guide tube	25. Catalytic muffler
5. Starter	12. Fuel return hose	19. Drain plug	
6. EGR valve	13. Common rail	20. Oil pan	
7. Rubber hose	14. Intake manifold	21. Oil cooler	

Assembly Drawings (Top/Bottom)

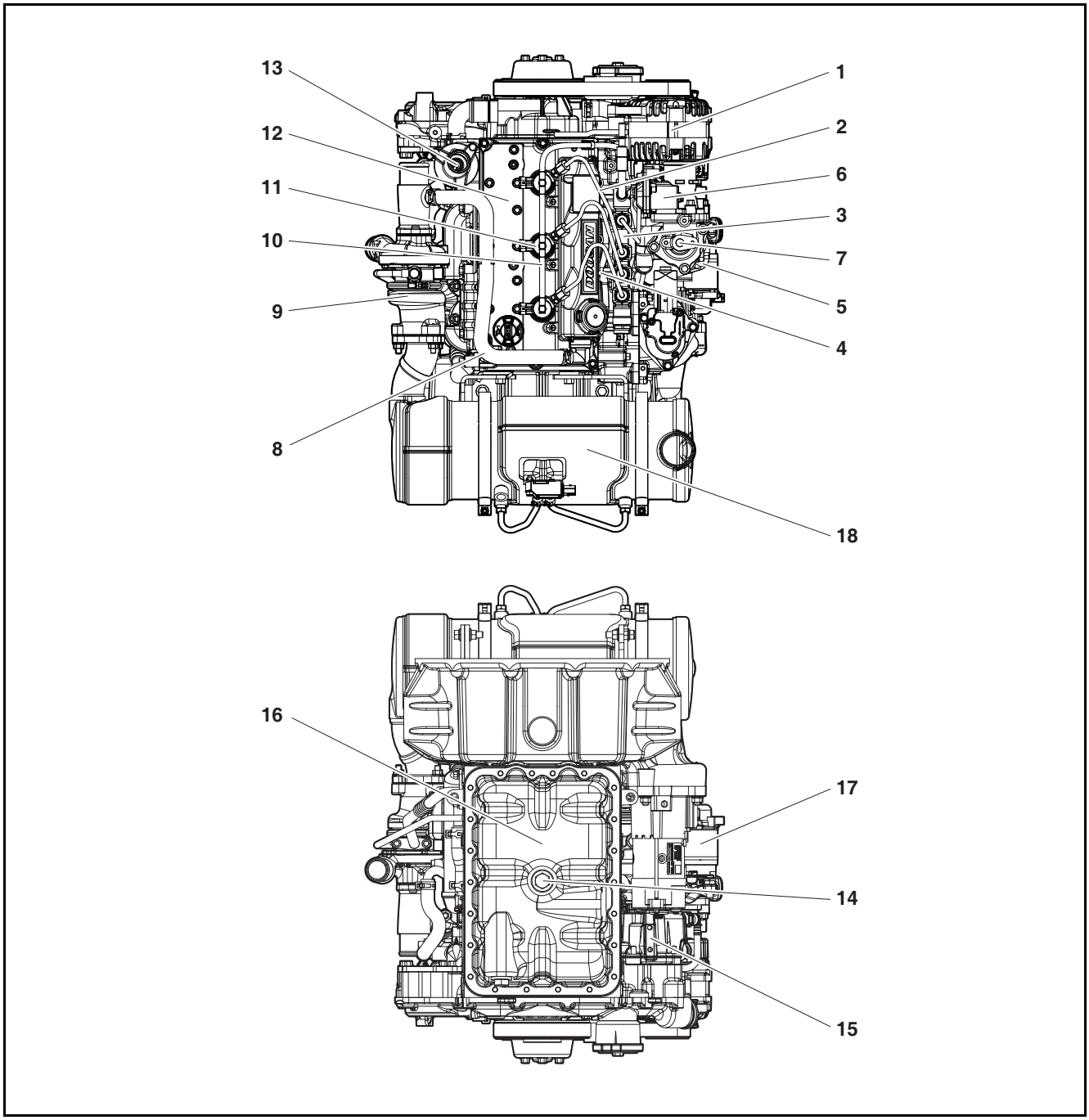

ED18190013

1. Alternator
2. Fuel injection pipe
3. Common rail
4. Glow plug
5. Oil filter
6. Throttle (Inlet pipe)
7. Intake stake
8. Breather hose
9. Turbocharger
10. Fuel return hose
11. Injectora
12. Cylinder head cover
13. Thermostat
14. Drain plug
15. Fuel injection pump
16. Oil Pan
17. Starter
18. Catalytic muffler

Engine Number Engraving

The engine code and manufacturing number are engraved in the position marked with A in the drawing. These numbers are necessary to request quality assurance or to order parts.

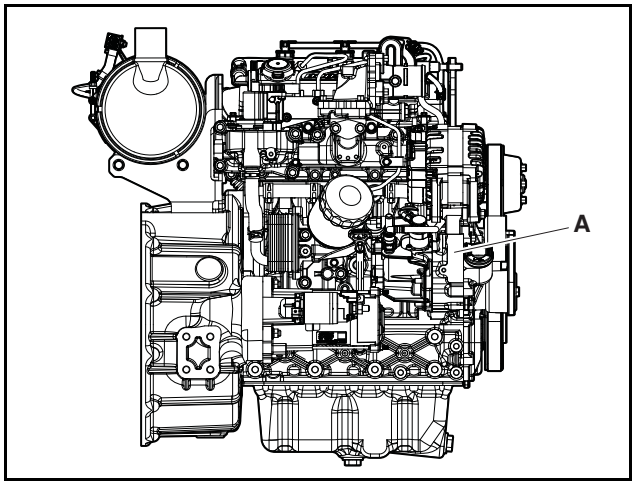

ED18190042

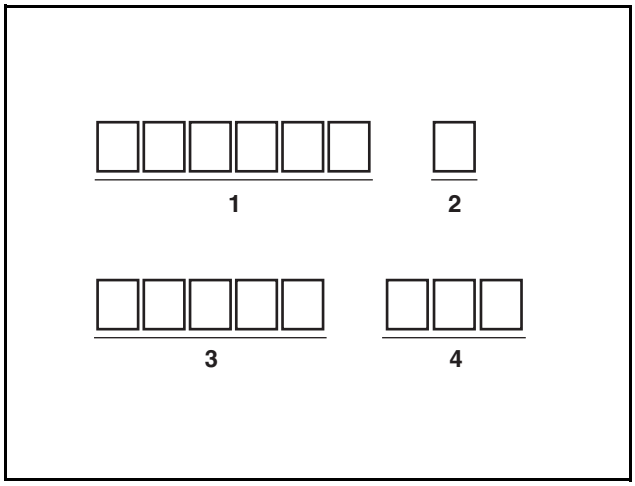

EDL022165B

1. Product name (6 digits)
2. Year (1 digit)
3. Serial Number (5 digits)
4. After new representative specification (3 digits)

Cylinder Block Number Engraving

The cylinder block serial number is engraved in the position marked as A in the drawing.

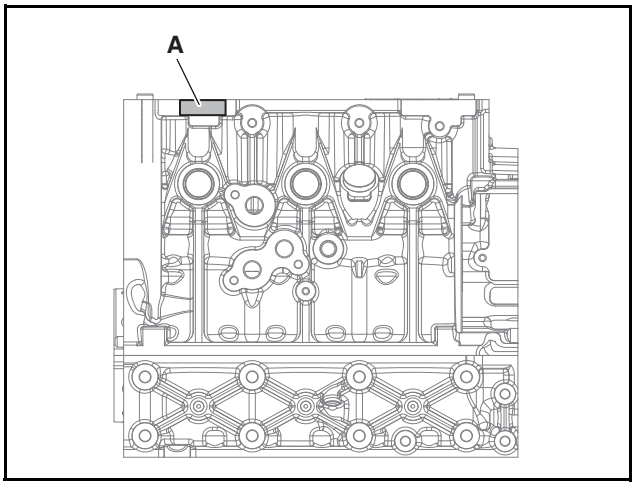

ED18190014

Engraving of Piston Bore Level of Cylinder Block

The piston bore level of the cylinder block is engraved in the position marked as A in the drawing. The piston bore level of the cylinder block is classified as A or B. These levels are necessary to order the suitable piston for the piston bore of the cylinder block.

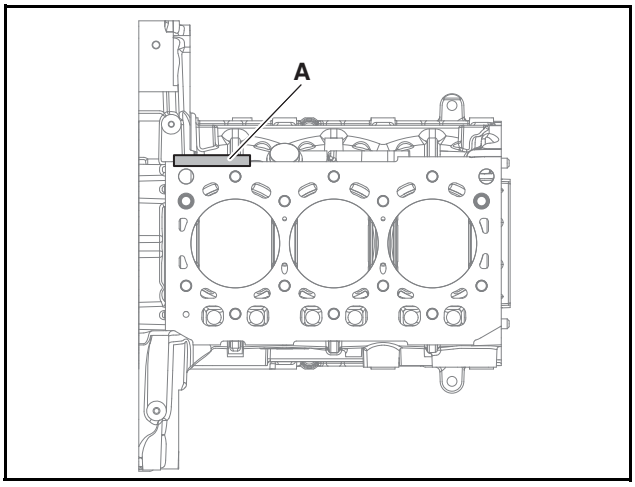

ED18190016

Engraving of Main Bearing Bore Level of Cylinder Block

The main bearing bore level of the cylinder block is engraved in the position marked as A in the drawing. The main bearing bore level of the cylinder block is classified as A, B, or C. These levels are necessary to order the suitable main bearing for the main bearing bore of cylinder block.

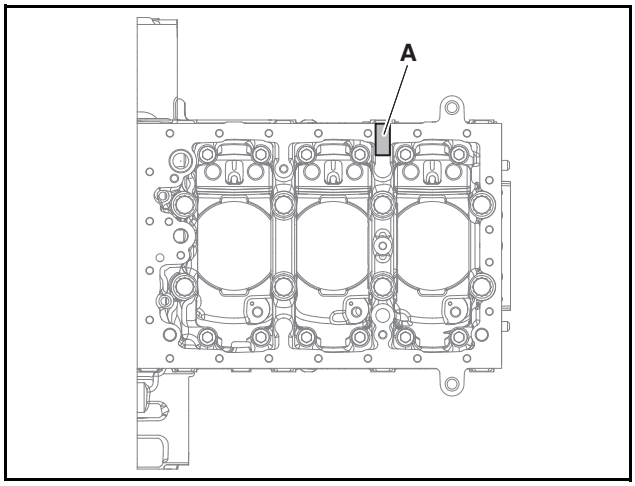

ED18190015

Crankshaft Main Journal Engraving

The crankshaft serial number is engraved at the position (A) in the drawing and the crankshaft main journal diameter class is engraved at the position (B) in the drawing. The crankshaft main journal diameter class is classified into A, B, and C. These levels are necessary to order the suitable main bearing.

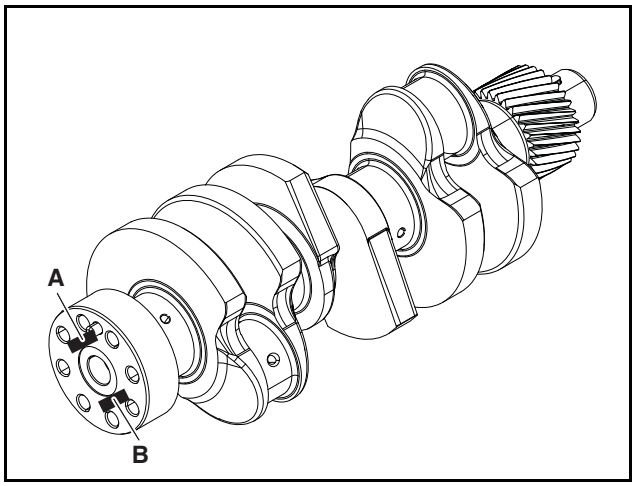

EDL013064A

Connecting Rod Engraving

The connecting rod weight is engraved in the position marked as A in the drawing and classified by a letter from A to F. These levels are necessary to order the connecting rod.

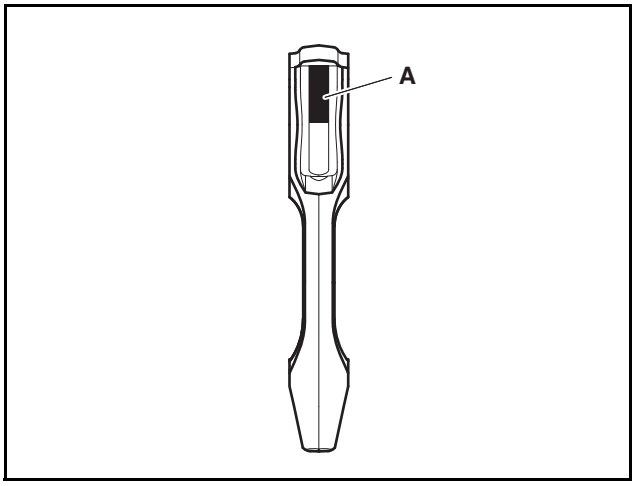

EDL022217A

Piston Engraving

The piston class is engraved on the position marked as A in the drawing. The piston class is classified into A and B. These levels are necessary to check the suitable piston class.

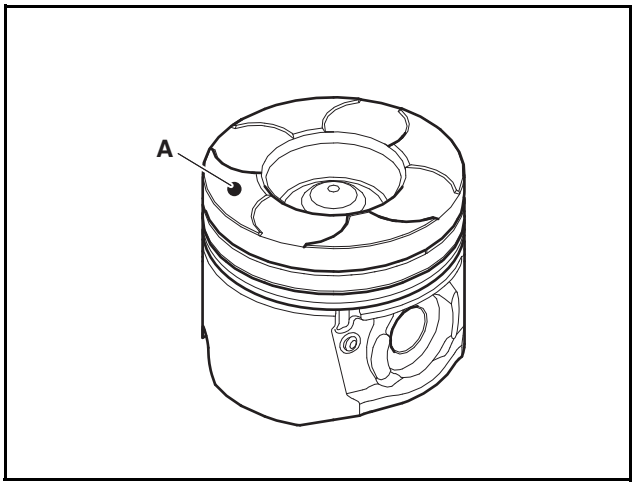

EDL022218B

Cylinder Head Gasket Identification

The cylinder head gasket identification hole (half circle) is located in the position marked as (A) in the drawing. It belongs to class A if there is one hole of identification on the cylinder head gasket, to class B if there are two holes, and class C if there are three holes. This identification is necessary to order the suitable cylinder head gasket.

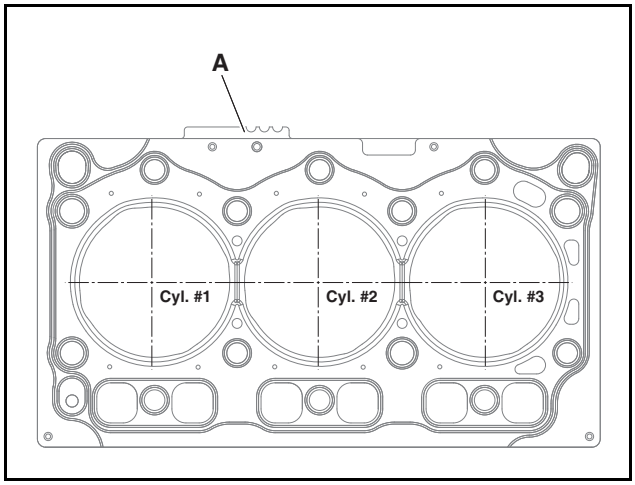

ED18190017

4. Regular inspection

General information 43
General Information 43
Routine Inspection 43
Regular inspection table 44
General Conditions 44
Cooling system 46
General Information 46
Amount of Antifreeze in Winter 46
Capacity of Coolant..... 46
Checking the Coolant..... 46
Measurement of Coolant Concentration 47
Replenishment of Coolant..... 48
Replacement of Coolant 48
Lubrication system 50
General Information 50
Engine Oil Standards 50
Engine Oil Capacity 51
Checking the Engine Oil 51
Replenishment of Engine Oil 52
Replacement of Engine Oil 52
Fuel system 54
General Information 54
Fuel Standards..... 54
Injector & Fuel Return Hose..... 54
Fuel Filter 55
Replacement of Fuel Filter..... 55
Air Bleeding in the Fuel Circuit..... 57
Fuel Filter Draining..... 58
Others/driving system 59
Belt Tension 59

General information

General Information

As time passes after purchasing an engine, each of the engines parts age and initial engine performance cannot be maintained.
Regular inspection and replacement according to the recommended regular inspection table allows you to maintain an engine with the optimum conditions and best performance for a long period and prevent unexpected accidents in advance.
Users are responsible for the proper operation and maintenance of engines. Engines should be inspected and replaced by officially-certified technicians in a workspace with the specified tools and facilities. Observe the following instructions to perform inspections.

1. Perform inspections on a flat floor without a slope.
2. Excluding extreme circumstances, only perform inspection while the engine is stopped.
3. Disconnect the '-' terminal of the battery before performing an inspection.
4. Perform inspection in a well ventilated space.
5. Use a wooden prop or lift when working under the engine.

⚠ DANGER

- **Wait until the engine is sufficiently cooled before starting inspection after operating the engine. Otherwise, you may be burned.**
- **You may be poisoned by the emission when starting an engine in a closed space. Perform inspection at the well-ventilate space.**
- **Unless absolutely compelled, do not perform inspection under an engine.**
- **Do not be close to fire when inspecting an engine. Fuel, oil, or batteries may generate gas, causing fire.**
- **If inspecting the engine while it is running, do not wear accessories such as necklaces, rings, watches or gloves. Such accessories may become stuck in rotating parts while the engine is running and may cause serious bodily injury.**
- **Individuals who use a mechanical heart or artificial internal organ should not enter the area near an engine while it is running. The high-voltage current of the injectors or ECU may cause abnormal operation of such equipment.**

⚠ CAUTION

- **Incorrect inspection methods may cause of engine faults.**
- **Cleaning an engine with liquids such as water or wax may cause breakdown of electrical parts.**
- **Be careful when handling batteries, cables, and electrical wirings because current flows through those parts.**
- **Do not put heavy things or apply excessive force or impact on the fuel-related units.**
- **Make sure that you connect the battery terminal ('+' and '-') to the right terminal. Connecting the '+' and '-' terminals to the wrong terminal may cause damage to the electrical unit parts and fire.**

Routine Inspection

Routine inspection is an inspection performed by an engine operator before operating the engine. It should be performed to protect operator's safety, as well as the engine.
The following is a minimal check list.

1. Check whether the engine smoothly starts and the levels of fuel, oil, and coolant are within the normal range.
2. Check if any discharged emissions are colored and if the exhaust contains toxic gas elements.
3. Check whether abnormal noise occurs after starting an engine or not.
4. Check whether oil or water is leaking.

4. Regular inspection

Regular inspection table

General Conditions

Regular inspection and replacement according to the recommended regular inspection table allows you to maintain the engine with optimum conditions and best performance for a long period and prevent unexpected accidents in advance.

(○ : Inspection and Adjustment, ● : Replacement)

Check Points	Daily	Inspection interval (x 1,000 hours)										Remarks
		0.5	1.0	1.5	2.0	2.5	3.0	3.5	4.0	4.5	5.0	
Coolant system												
State of connection between cooler and coolant hose	○											
Capacity and state of coolant Note 1) Note 2)	○	General genuine coolant: replace every 1,200 hours										
		Genuine Hyundai Doosan Infracore LLC coolant: replace every 6,000 hours Note 3)										
Cooling fan belt tension	○	Inspect every 1,000 hrs (or 6 months) and replace if required Replace every 3,000 hrs (or 3 years)										
Lubrication system												
Lubricating device and oil leakage	○											
Capacity and condition of engine oil	○											
Engine oil filter			●		●		●		●		●	
Engine oil	○*	500 hr interval or 1 year (Option: 1,000 hr**)										
Fuel system												
Fuel line and connection unit	○											
Fuel filter			●		●		●		●		●	
Fuel volume	○											
Water draining from water separator	○											
Fuel injection time		Inspect and adjust if required										
Injector		Inspect and adjust if required										
Compression pressure Note 4)		Inspect and adjust if required										
Intake/Exhaust system												
Air cleaner	○	Clean and replace if required										
Throttle body cleaning		Clean and replace if required										
Intake line and connection unit		Clean and replace if required										
Exhaust line and connection unit		Clean and replace if required										
Emission state												

Cylinder head												
Head cover injectors oil seal		Inspect and replace if required (Replace when replacing injectors)										
Electric system												
Battery charging state	◯											
Various electric units	◯											

Note 1) Replenish coolant if required.

Note 2) Check coolant every 500 hours to maintain the concentration of antifreeze and additives.

Note 3) Part number for 200 L drum: 500201-00011, part number for 3 L pail: 500201-00012

Note 4) Compression Pressure Range: 28 ~ 33 bar
Compression Pressure Lowest limit: 20 bar
(Sea level/Cranking speed 180 ~ 200 rpm/Battery SOC Over 80%)
However, The result can be varied by the condition of measurement.
In addition, the measurement is lower than the figures above.
Even though the measurement is lower than the guided figures, and when the differences among cylinders are lower than 10%, the compression pressures are regarded as Normal.
When other cases than the Hyundai Doosan Infracore guide above are encountered, please contact the service manager in regional Hyundai Doosan Infracore office and Hyundai Doosan Infracore HQ service.

* If an OLS is not installed, check the oil level gauge and add oil when the oil level gauge indicates the minimum level.
If an OLS is installed, even in the event of a low level warning, stop the machine on flat, even ground, perform a cross-check with the oil dipstick gauge, and add oil as necessary.

** Service interval varies depending on engine oil, diesel fuel quality and operation conditions.
Determine service intervals by analyzing the engine oil properties under working conditions after analyzing the result of the test. 1,000 hr interval is only for the customer who get the confirmation from DI for the machine usage profile.

Cooling system

General Information

Coolant plays an important role in preventing overheating and freezing of the engine. However, as the engine is used over time, the anticorrosive and anti-rust performance of the coolant diminishes. The state of the coolant must be maintained through daily inspections and replaced regularly. Genuine Hyundai Doosan Infracore LLC may be used continuously for up to 3 years or 6,000 hours.
We recommend using genuine Hyundai Doosan Infracore LLC. When genuine Hyundai Doosan Infracore LLC coolant is used, there is no need to add an anti-corrosive.

	DI general genuine coolant	DI general genuine LLC coolant
Replacement interval	1,200 hours or 1 year	6,000 hours or 3 years

Note) Genuine Hyundai Doosan Infracore LLC (part number for 200 L drum: 500201-00011, part number for 3 L pail: 500201-00012)

The mixture ratio for engine coolant should be 45 ~ 50% antifreeze included (Note: If anti-corrosive agent is not contained, the DCA should be added 3 ~ 5%) and 3 to 5% of an additive (DCA4) for preventing corrosion. For the water in the coolant, use clean tap water. The coolant must be inspected regularly in order to maintain the concentration of antifreeze and additives.

⚠ CAUTION

By maintaining the coolant at the mixture ratio recommended by Hyundai Doosan Infracore, you can effectively prevent corrosion in the engine and maintain long-term optimal engine performance. Using contaminated water or an unspecified antifreeze or additive can cause serious faults in the cooling system.

Amount of Antifreeze in Winter

- Coolant freezing point according to anti-freezing ratio

Coolant (%)	Antifreeze (%)	Freezing point (°C)
85	15	Above -10
80	20	-10
73	27	-15
67	33	-20
60	40	-25
56	44	-30
50	50	-35

Capacity of Coolant

Engine Model and Product Code	Coolant capacity (ℓ)
DM01-LEP00/LEP01/LEP02/ LEP03/LEP04/LEP05/MFP00/ MFP01/MFP02/ MFP03/MFP04/MFP05	3

Checking the Coolant

⚠ DANGER

If the radiator cap is opened to exchange or replenish coolant while the engine is overheated, hot water will spurt out and may cause serious burns. If it is absolutely necessary to open the radiator cap while the engine is overheated, wrap the radiator cap with a cloth and slowly open the cap in two steps until the steam pressure has been released from the inside. After the steam pressure has been completely released, remove the radiator cap.

1. Check the position of the supplementary tank.
2. Make sure that the engine and radiator are cooled.
3. If the coolant level indicates between the upper limit and the lower limit on the supplementary tank, it means that the coolant volume is normal.
4. If there is insufficient coolant, replenish it.
5. Open the radiator cap and check the condition of the coolant. If the coolant cap is contaminated or insufficient, measure the coolant concentration. If the coolant concentration is outside the specified range, exchange the coolant.

Measurement of Coolant Concentration

- Special Tools

Figure	Product Number/Name
	60.99901-0038 Coolant test sheet

The coolant concentration can be measured as follows.

1. If the engine coolant temperature is within a range of 10 ~ 55°C, drain the coolant and fill half a plastic cup with it.

⚠ CAUTION

When taking out a sample of coolant from the supplementary tank, it is difficult to measure the precise concentration. Always take out sample by opening the drain plug of coolant.

2. Soak the test sheet in the coolant and take it out after 3 ~ 5 seconds. Shake the sheet to remove the remaining coolant.
3. Wait for about 45 seconds until the test sheet changes its color.

⚠ CAUTION

Measurement time should not exceed 75 seconds. The color changes as time passes.

4. Check the color on test sheet.

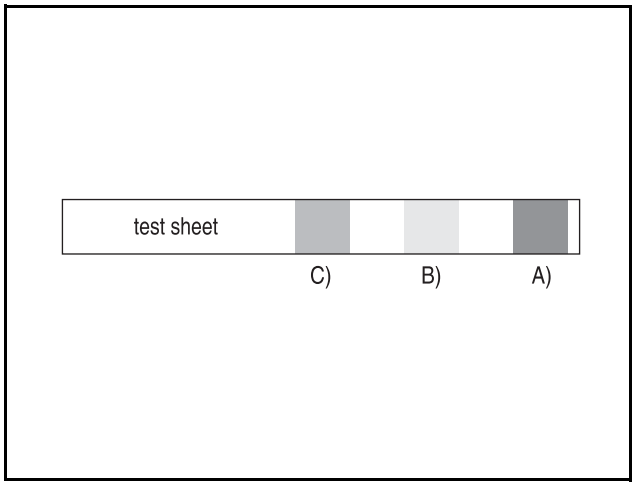

EDL0213002A

1) Compare the color of part A on the test sheet to the color of GLYCOL / FREEZEPOINT (End pad) of the standard color table.
2) Compare the color of the test sheet (B) to the color of MOLYBDATE (Middle pad) of the standard color table.
3) Compare the color of the test sheet (C) to the color of NITRITE of the standard color table.
5. Compare and confirm the parts with identical colors on the test sheet and the standard color table.

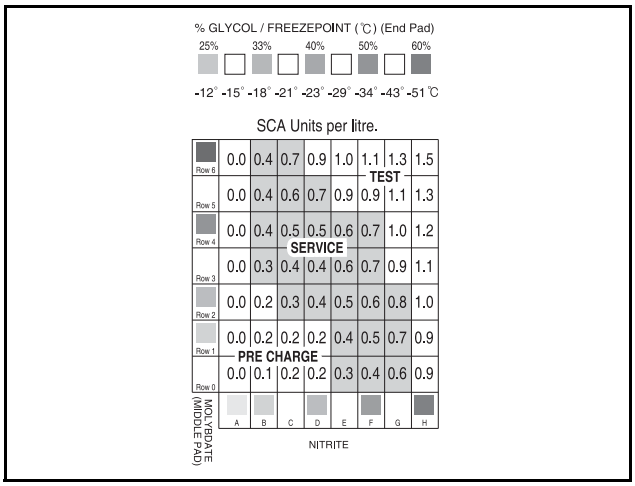

EDL022154A

1) Compare the changed pink color part A of the test sheet with the GLYOOL/FREEZEPOINT (End pad) of the standard color table on top of the container and confirm the concentration. The concentration indication has to be within the color scope of 33~50%.
2) The state of additives for anticorrosion is shown on the point where the color of MOLYBDATE (Middle pad) on the standard color table (which is identical with the Middle (B) of the test sheet) is crossed with the color of NITRITE on the standard color table (which is identical with the (C) of the test sheet). It should be maintained at the optimum range, in the green section between 0.3 to 0.8.
3) If the result is below 0.3, add more anti-corrosive (DCA4). If the result is over 0.8, drain some coolant and add some tap water to adjust the concentration.
4) Use distilled water or tap water. Natural water such as river water or underground water (hard water) contains a significant amount of minerals which form deposits in the cooling system and degrade the cooling performance, so make sure to use tap water which satisfies the following standards.

< Standards for usable tap water >

Standard					
Item	Inorganic chloride	Sulphate	Hardness	Solids	Acidity
Amount	< 40 ppm	< 50 ppm	< 9.5 °d.H	< 340 ppm	5.5 ~ 9.0

PPM (Parts Per Million) - Unit of concentration for small amounts of matter.
- 1 ppm = 1 mg/1 kg, 1 mL/1 L

°d.H - Unit of concentration for small amounts of matter.
- 1°d.H = 17 ppm

⚠ CAUTION

- **The tap water standards are intended for reference only. Do not use them as absolute standards.**
- **If the water quality is suspect, avoid using tap water and use distilled water instead, if possible.**

⚠ CAUTION

- **If the color on the test sheet does not match the color of the standard color table, find a middle color on the standard color table. For example, if the color of (C) of the test sheet matches D and F on the NITRITE of the standard color table, select E.**
- **To prevent corrosion inside of the engine cooling unit, drain the coolant and replace it with new coolant once a year.**

Replenishment of Coolant

If the coolant level of the supplementary tank is below the lower limit, replenish the coolant as follows.

1. Remove the supplementary tank cap.
2. Replenish coolant until its level is between the upper and lower limit of the supplementary tank.
3. Install the supplementary tank cap.

⚠ CAUTION

Be careful not let foreign substances flow into the engine when replenishing coolant.

If there is not coolant in the supplementary tank, replenish the coolant as follows.

1. Remove the radiator cap while the engine and radiator are cold.
2. Replenish coolant up to the inlet of the radiator.
3. After starting the engine let the coolant circulate sufficiently and check the coolant level. If there is insufficient coolant, replenish more.
4. Install the supplementary tank cap.
5. Remove the supplementary tank cap.
6. Replenish coolant until its level is between the upper and lower limit of the supplementary tank.

⚠ CAUTION

- **If the radiator cap is opened while the engine is hot, hot water will spurt out and may cause serious burns. Open the radiator cap after making sure that the engine has been fully cooled.**
- **Mark and separately manage the containers for storing coolant from beverage containers for avoiding confusion. See a doctor immediately in case of drinking coolant.**

Replacement of Coolant

- General genuine coolant: 1 year or 1,200 hours
- Genuine Hyundai Doosan Infracore LCC coolant: 3 years or 6,000 hours

Note) In the event that separate specifications from the client are applied, use coolant which satisfies the standards below.

Specification	Specification number
ASTM	D3306, D6210
JIS	K2234
SAE	J1034

⚠ DANGER

- **Never open the radiator cap while the engine is overheated. If the radiator cap is opened while the engine is overheated, hot water will spurt out and may cause serious burns. Open the radiator cap after ensuring that the engine has been cooled sufficiently.**
- **Mark and separately manage the containers for storing coolant from beverage containers to avoid confusion. If coolant is ingested, see a doctor immediately.**

⚠ CAUTION

Be careful not to get coolant on any belts or electric apparatus when replacing the coolant.

1. Make sure that engine and radiator are cooled.
2. Place a container in front of the coolant drain plug.
3. Remove the radiator cap.
4. Unplug the coolant drain plug of the radiator and then drain coolant.
5. After completing coolant drain, connect the coolant drain plug again.
6. Drain the coolant from the coolant supplementary tank and cleanse the tank.
7. Fill the radiator inlet with water and install radiator cap.

Note) Slowly pour coolant in to let the air be discharged from radiator and press the hose connected to it to discharge the air inside.

8. Start the engine to let the cooling fan rotate 2 or 3 times. When the engine is warmed up, increase the engine RPM two or three times.
9. Stop engine and wait until engine is cooled.
10. Remove the radiator drain plug and drain water.
11. Repeat the above mentioned processes from 1 to 8 until the drained water becomes clear.
12. Press the hose connected to the radiator to discharge the air from inside of the radiator and slowly fill the radiator with the coolant at the specified mixing ratio to let the air be discharged from the radiator.

Note) Use recommended genuine antifreeze.

⚠ CAUTION

- **Do not mix antifreezes from different manufacturers.**
- **Do not mix the coolant with different concentrations.**
- **Do not add antitrust which is not recommended by us.**
- **As insufficient coolant concentration may cause corrosion or freezing, on the other hand, an excessive concentration may degrade the cooling performance. Mix coolant with 40% antifreeze and 3~5% additives (DCA4) to prevent corrosion.**

13. Operate the engine at idle after starting. When cooling fan is running and coolant is circulated, remove radiator cap and replenish coolant through the inlet.
14. Replenish coolant until the cooling fan rotates 3 ~ 5 times.
15. Replenish coolant to the upper limit of the supplementary tank and then install radiator cap.
16. Operate the engine at idle until the cooling fan rotates 2 ~ 3 times.
17. Stop the engine and wait until the engine and the radiator are cooled.
18. After checking the coolant level in the supplementary tank, replenish coolant until the tank level stays between the upper and lower limit without changing.

Note) After replenishing coolant, check the coolant level of the supplementary tank for at least two or three days.

⚠ CAUTION

After replenishing coolant, check the coolant level of the supplementary tank for at least two or three days.

⚠ WARNING

Discard exchanged coolant according to the regulations set forth by the relevant authorities. Disposing of exchanged coolant into the ground, sewers, drains, rivers, or the sea will cause serious environmental pollution. Violation of regulations regarding discard of engine oil without observing the handling regulations, will be punished.

Lubrication system

General Information

Engine oil lubricates, cools, seals, prevents corrosion, and cleans engines, enhancing engine performance and extending the engine's lifetime. If a vehicle is continuously driven while engine oil is insufficient, the moving parts of the engine may get stuck, causing engine faults.
Engine oil should be checked through the oil level gauge and replenished if required. Oil level should be checked while the engine is stopped. To check the oil level, turn off the engine while it is running and wait for 5 ~10 minutes to allow the engine oil to flow back into the oil pan. The engine oil level should indicate between the upper limit and the lower limit of the oil level gauge.

Engine oil should be periodically replaced based on the regular inspection table and the oil filter and the cartridge should be replaced as the engine oil is replaced.

⚠ CAUTION

The engine is capable of operating in all directions with a maximum tilted angle of 55° for a short period of time when the oil level is at its highest.

However, such usage is not recommended as it can lead to engine damage.

Engine Oil Standards

Use the specified engine oil suitable for the environment and conditions of the site where the engine will be used.

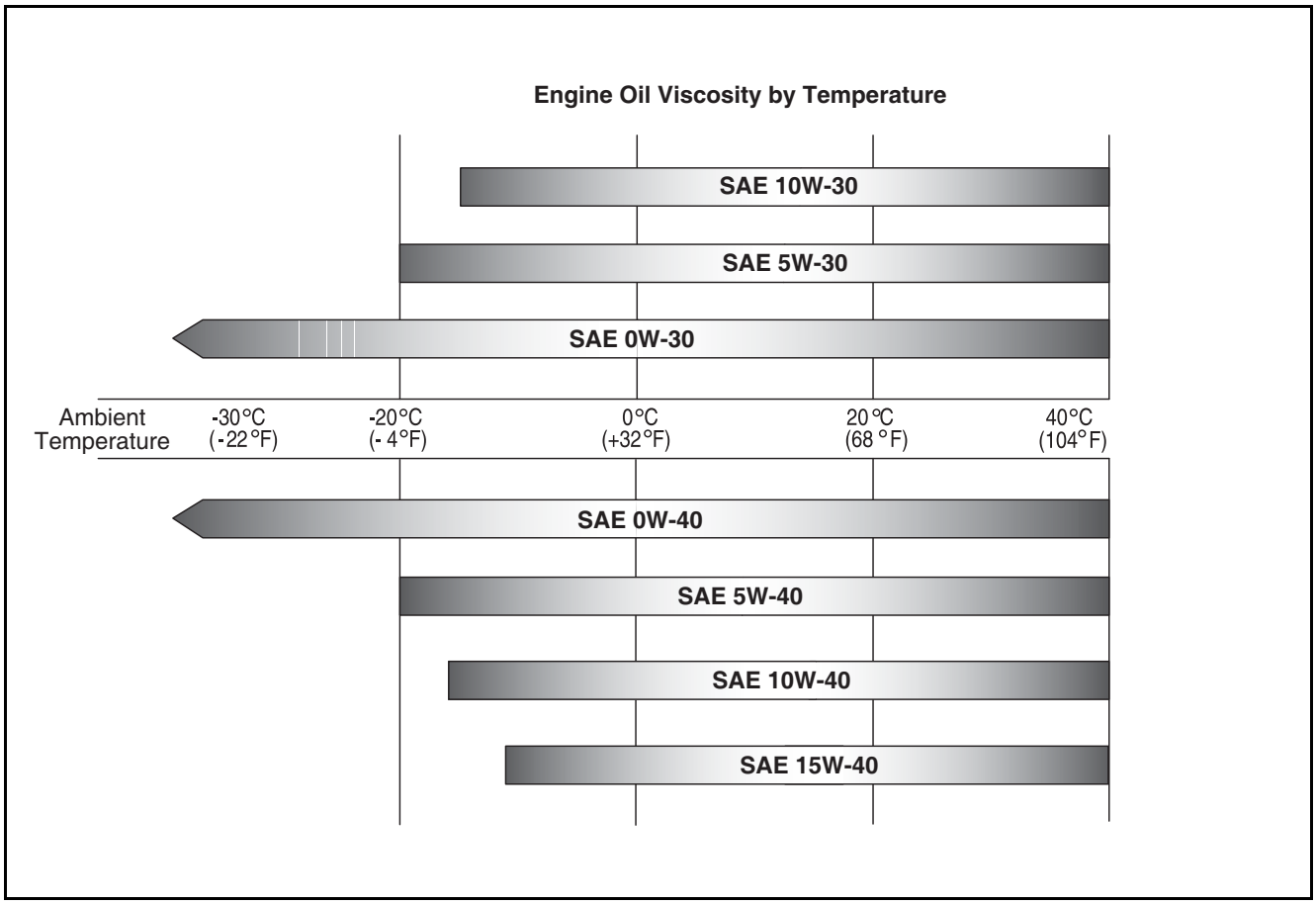

EDL02180008

Please use the engine oil which satisfies the following recommended specifications.

Engine Model	SAE Classification	Oil Class
DM01-LEP00/LEP01/LEP02/LEP03/ LEP04/LEP05/MFP00/MFP01/MFP02/ MFP03/MFP04/MFP05	SAE 10W30/40	API CJ-4 (500hr interval) / API CK-4 (1,000hr interval)

Note) Use our genuine oil recommended by us.

Engine Oil Capacity

Please replenish the engine oil based on the following recommended oil injection amount.

Engine Model	Engine oil capacity (ℓ)	
	Inside of the oil pan	
	Max.	Min.
DM01-LEP00/LEP01/ LEP02/LEP03/LEP04/ LEP05/MFP00/MFP01/ MFP02/MFP03/MFP04/ MFP05	6.3	2.8

Checking the Engine Oil

1. Move the engine to a flat surface to maintain the engine level.
2. Start the engine and then stop it when it reaches the normal temperature.
3. Wait for 5 ~ 10 minutes.
4. Pull the oil level gauge upward to pick it out.

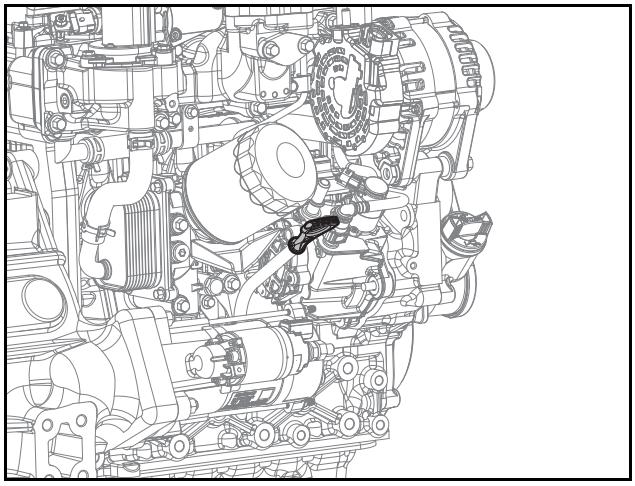

ED18190018

1) Check the position of the oil level gauge.
2) It is mounted beside the oil filter at the side of the engine.
3) Pull the ring of the oil level gauge to pick it out.

5. Clean the indication line of the oil level gauge with clean cloth.

⚠ CAUTION

Cleaning the indication line of the oil level gauge with dirty cloth allows the foreign substances to get into the engine, causing engine faults.

6. Insert the oil level gauge again.

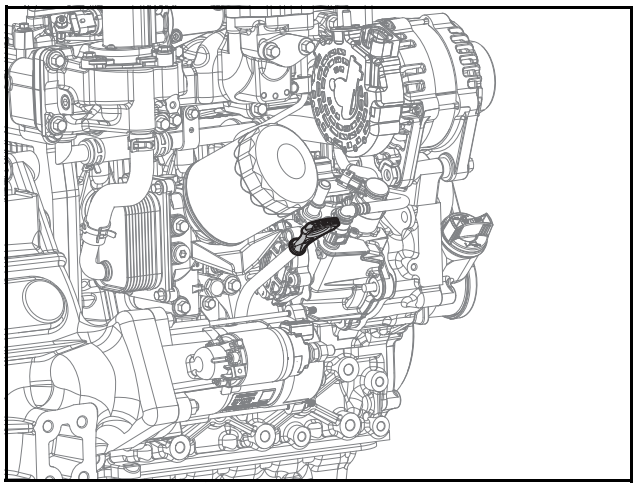

ED18190018

1) Insert the oil level gauge again by using the ring.
2) If the dipstick doesn't slide in, rotate it 180° and try again.

7. Pull the oil level dipstick upward to pull it out.

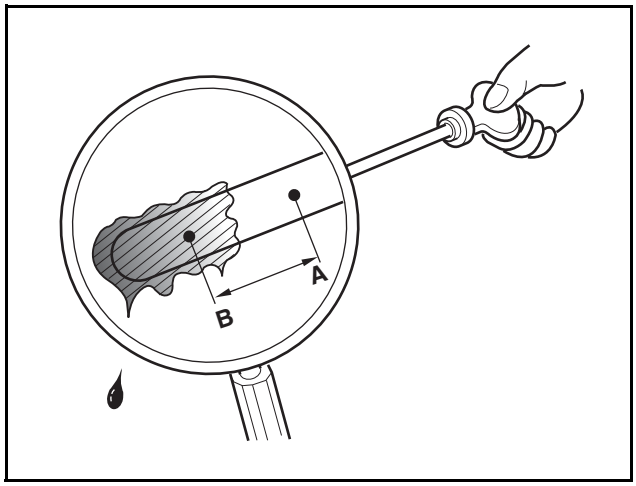

EDL022152A

1) Check if the oil is smeared between the upper limit (A) and the lower limit (B) of the oil level gauge.
2) If engine oil is smeared below the lower limit (B) or not smeared on the gauge at all, replenish engine oil.
3) Check condition of engine oil. If it is polluted, replace it with new oil.

Replenishment of Engine Oil

⚠ CAUTION

Be careful not to let foreign substances flow into the engine when removing the oil cap.

1. Remove the oil cap on the top of the engine.

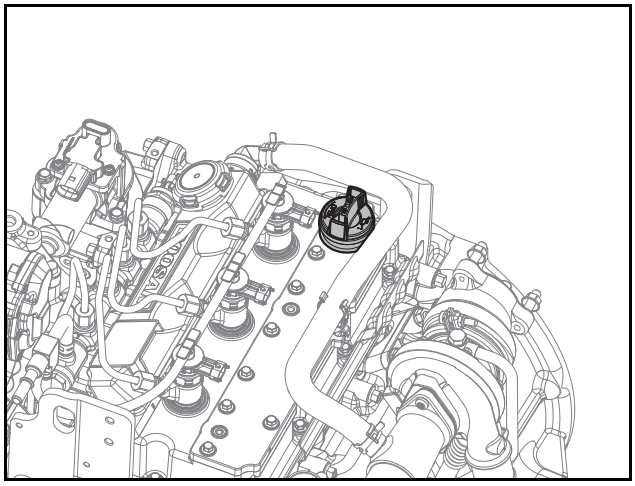

ED18190019

2. Add our recommended genuine oil to replenish the oil level.

1) Add our recommended genuine oil by dividing it into several portions for replenishment.
2) Wait for about 1 ~ 2 minutes and then check the engine oil level.
3) Check whether the oil is smeared between the upper limit and the lower limit of the oil level gauge.
4) Repeat the above process until the engine oil level reaches the appropriate level.

⚠ CAUTION

- **Be careful not to let foreign substances flow into the engine when replenishing engine oil.**
- **Exceeding the upper limit of the oil level gauge may cause engine faults. If you have exceeded the upper limit of the oil gauge, drain it until the engine oil level is indicated between the upper limit and the lower limit of the oil level gauge.**
- **Do not use unspecified engine oil additives.**

3. Complete engine oil replenishment and cover the oil cap.

Replacement of Engine Oil

- Tightening Torque

Component	Tightening Torque
Drain plug	3 kgf·m

- Oil capacity

Engine Model	Engine oil capacity (ℓ)	
	Inside of the oil pan	
	Max.	Min.
DM01-LEP00/LEP01/ LEP02/LEP03/LEP04/ LEP05/MFP00/MFP01/ MFP02/MFP03/MFP04/ MFP05	6.3	2.8

⚠ DANGER

- **Prolonged and repeated contact of skin with engine oil may lead to shrinking, dryness of skin and even cause dermatitis.**
- **Do not expose skin with exchanged engine oil for a long period.**
- **Always wear work clothes and gloves.**
- **When skin is stained with engine oil, immediately wash it with water, soap or hand cleaners.**
- **Do not clean skin with gasoline, fuel, thinner, or solvent.**
- **Apply a skin protective cream after cleaning from oil.**
- **Do not put oil-stained gloves or cloth in pockets.**

⚠ WARNING

Discard exchanged oil according to the regulations set forth by the relevant authorities. Disposing of discharged oil into the ground, sewers, drains, rivers, or the sea will cause serious environmental pollution. Violation of regulations regarding discard of engine oil without observing the handling regulations, will be punished.

⚠ CAUTION

When exchange the New Oil filter, Please dispose of the Old Oil and filter.

1. Drain engine oil.

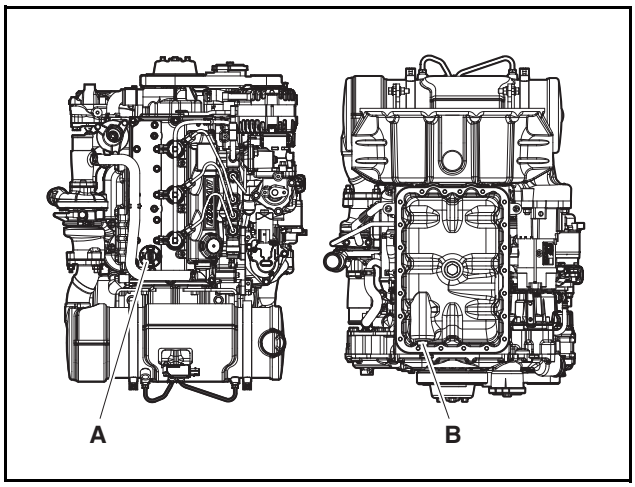

ED18190043

1) Place a container under the engine to drain the engine oil.
2) Remove the drain plug B and drain the engine oil.
3) Remove the oil cap A.
2. Remove the oil filter A.

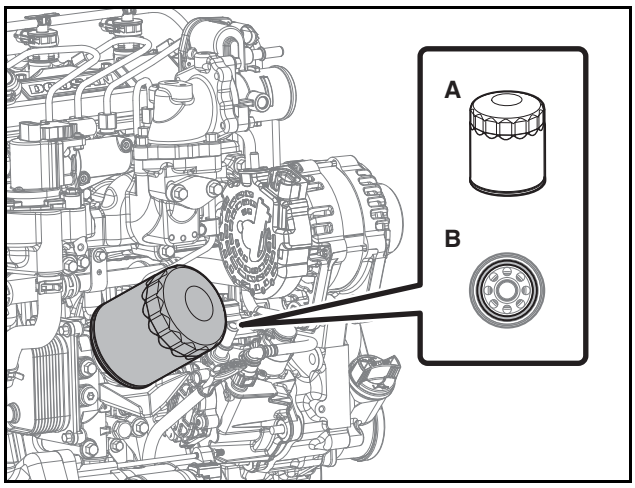

ED18190020

1) Disassemble oil filter A with the filter wrench.

⚠ CAUTION

Oil in the filter may run down while detaching the oil filter. Be careful not to contaminate the other parts by using a cloth when detaching the filter. After replacing the oil filter, wipe clean any other parts which the oil has touched.
Use genuine oil filter.

2) Cleanly wipe the surface on which the oil filter is mounted.
3) Thinly spread engine oil over the rubber packing B of the new oil filter A.
4) Temporarily assemble the new oil filter by rotating it by hand.
5) Assemble the oil filter with the filter wrench at a torque of 16 ~ 20 N·m.
3. Add the engine oil.

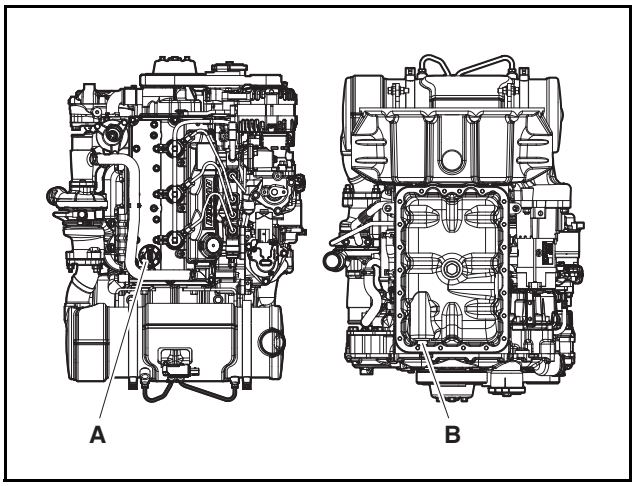

ED18190043

1) Connect the drain plug B at a torque of 3.0 kgf·m.
2) Disassemble the oil level gauge.
3) Inject genuine oil recommended by Hyundai Doosan Infracore.

Note) Inject 1/2 of specified oil and then wait for about 1 minute. Then inject the other 1/2 of oil.

4) Assemble the oil cap A.
5) Assemble the oil level gauge.
6) Remove the engine oil drain container from under the engine.
4. After this, perform the final inspection.
1) Check if engine oil leaks after starting the engine.
2) Start the engine and then stop it when it reaches a normal temperature.
3) Wait for 5 ~ 10 minutes.
4) Check the engine oil level with the oil level gauge.

⚠ CAUTION

Adding oil which exceeds the upper limit of the oil level gauge may cause engine faults. If you have injected engine oil far over the upper limit of the oil level gauge, drain it until the engine oil level indicates somewhere between the upper and lower limit of the oil level gauge.

Fuel system

General Information

Fuel quality is an important factors in satisfy standards for engine performance, engine lifetime, and emissions. Hyundai Doosan Infracore engines are designed to use diesel fuel available in the area where the engines are sold.

⚠ CAUTION

- **Use clean, specified, and qualified fuel only. Using irregular or unspecified fuel may cause critical damage and faults to the engine.**
- **Inject fuel while the engine is stopped.**

Fuel Standards

To maintain the optimum engine performance, refer to the following recommended fuel table to select the appropriate fuel.

- Ultra Low Sulfur Diesel

Fuel Ingredients		Standard
Specific Gravity	(kg/lit)	0.820 ~ 0.845
Fire Point	(°C)	Above 40
Viscosity (40°C)	(cSt)	1.9 ~ 5.5
Sulfur Content	(wtppm)	Below 15
Cloud Point	(°C)	-
Pour Point	(°C)	Below -17.5
Low temperature filter clogging point	(°C)	Below -16
Color (ASTM)		Below 2.5
Residual carbon (10%) Vapor/residual fraction (wt)	(%)	Below 0.15
Total acid value	(mg KOH/g)	Below 0.40
Back plate corrosion rate (100°C, 3 hours)		Below 1
Ash Content	(mass %)	Below 0.01
Moisture and Precipitation	(vol. %)	Below 0.02
Cetane Index		Above 45
Distillation Test Temperature	50% Distillation Point	-
	90% Distillation Point	Below 360

Note) High sulphur content in diesel fuel Hyundai Doosan Infracore diesel engines can be operated with fuels whose sulphur content is max. 15wtppm.

Injector & Fuel Return Hose

Be careful to avoid damage for fuel return hose of injector. Don't press on the fuel hose, don't drop heavy tool like as spanner on engine, don't step on fuel hose, don't stand on engine.

If the fuel hose are broken by wrong handling, it is possible fire.

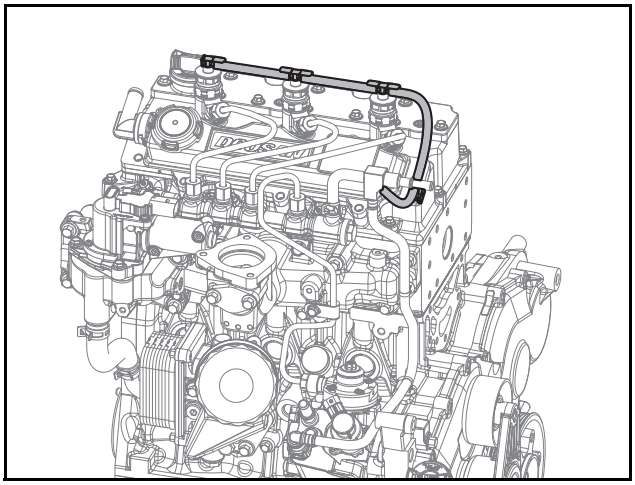

EDM01200189

Fuel Filter

It is used to remove water and foreign materials from fuel in order to send clean fuel to the fuel injection pump.

⚠ CAUTION

- **Make sure to check the fuel filter and drain water from it periodically. Otherwise, water may enter the engine fuel system, causing a serious problem to the fuel injection pump, fuel injection pipe, common rail, injector, etc. Also, it can deteriorate or damage the fuel filter.**
- **When draining water from the fuel filter, fuel may be drained as well. Fuel is highly flammable. Keep a lit cigarette or flame away from the engine during draining water from the filter.**
- **Use the specified clean quality fuel only. If using fuel other than the specified one, more water can be accumulated in the fuel filter.**
- **If water is not drained from the fuel filter when the fuel filter warning lamp is turned on, water may enter the fuel system, causing engine stall.**
- **A new fuel filter should be installed without fuel in it. Never add fuel in the used fuel filter or fuel tank to a new fuel filter.**

Replacement of Fuel Filter

1. Remove the WIFS (water in fuel sensor) connector.

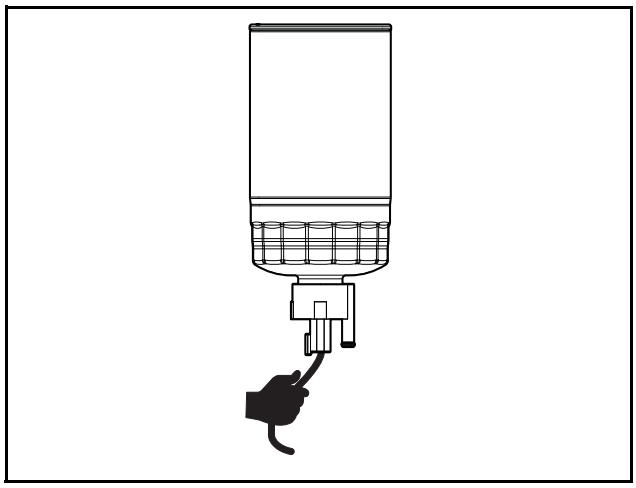

EDL02170031

1) Arrange the engine filter to prevent any interference.
2) Remove the WIFS (water in fuel sensor) connector from the fuel filter.

2. Remove the fuel filter.

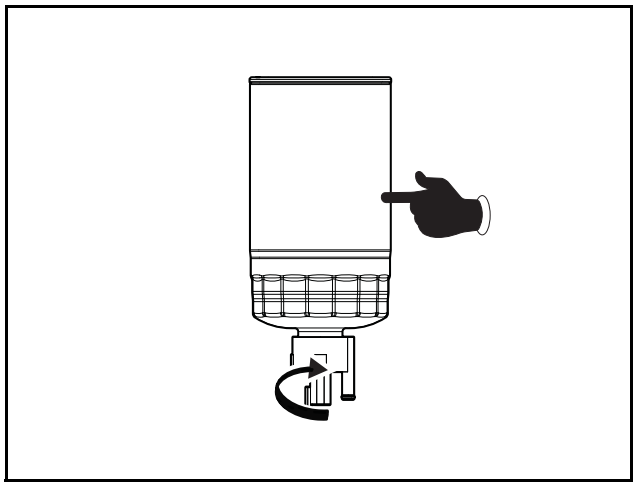

EDL02170032

1) Turn counterclockwise and loosen the fuel filter.

3. Replace the fuel filter.

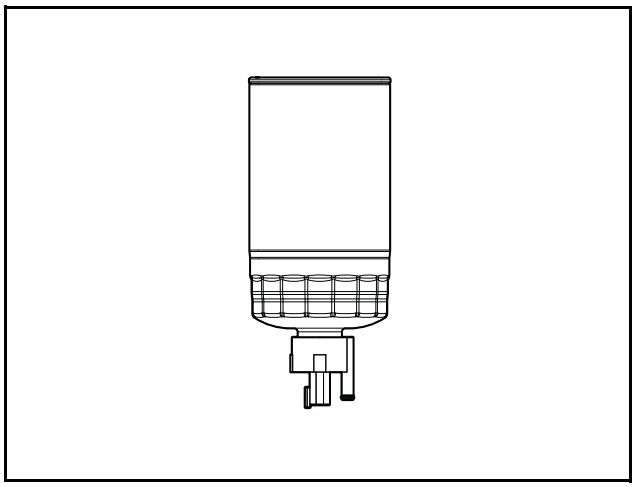

EDL02170033

1) Prepare a new fuel filter.

⚠ CAUTION

- **Use the genuine fuel filters we recommend. Use of irregular or recycled parts may lead to critical failures in the engine.**
- **A new fuel filter should be installed without fuel in it.**
- **Do not reuse old fuel in to the New fuel filter.**
- **Never add fuel in the used fuel filter or fuel tank to a new fuel filter.**

4. Apply oil to the gasket.

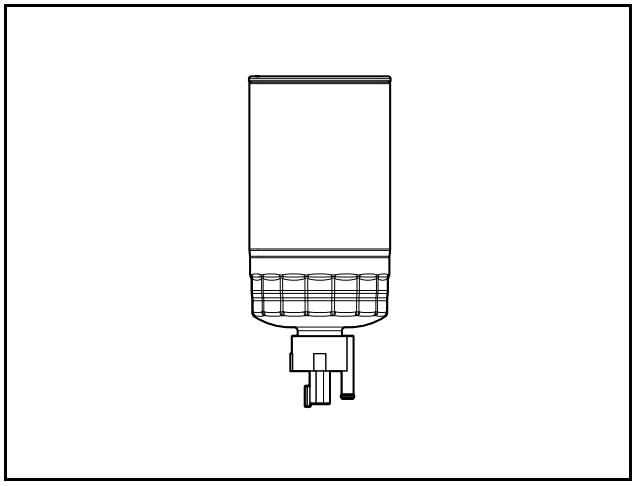

EDL032813D

1) Apply oil to the gasket of the fuel filter.

5. Install the fuel filter.

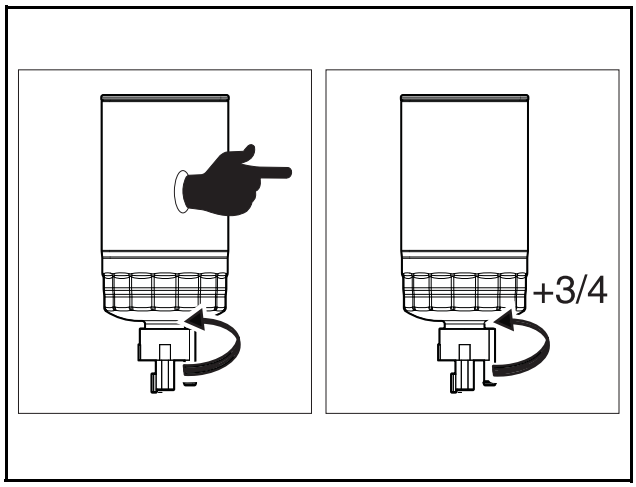

EDL02170034

1) Turn the fuel filter clockwise until its gasket reaches the cap of the fuel filter.
2) Tighten the fuel filter to 3/4.

6. Connect the WIFS (water in fuel sensor) connector.

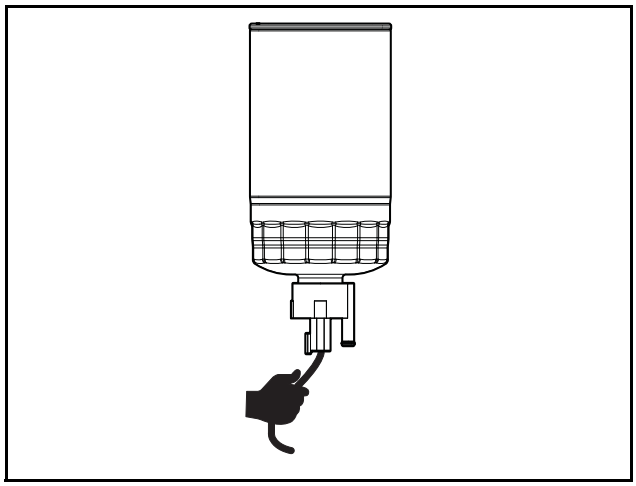

EDL032813A

1) Connect the WIFS (water in fuel sensor) connector to the fuel filter.
2) Keep the fuel filter and the surroundings clean and out of foreign substances such as fuel.

7. Bleed air out of the fuel delivery line.

Air Bleeding in the Fuel Circuit

1. Loosen the air discharge valve.

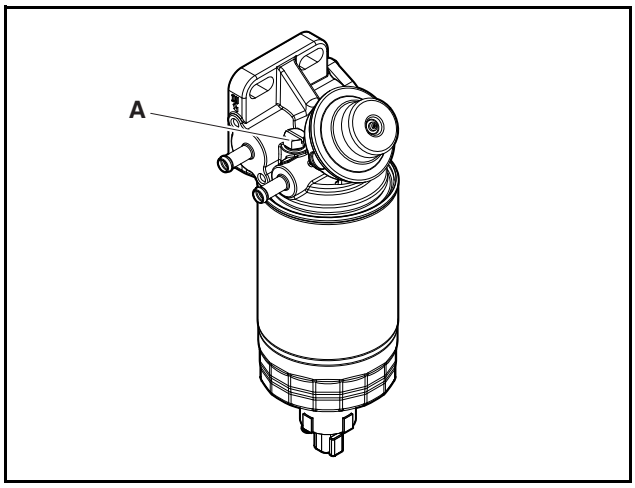

EDL02170035

1) Turn counterclockwise and loosen the air discharge valve (A) on top of the fuel filter.
2. Bleed air out of the fuel delivery line.

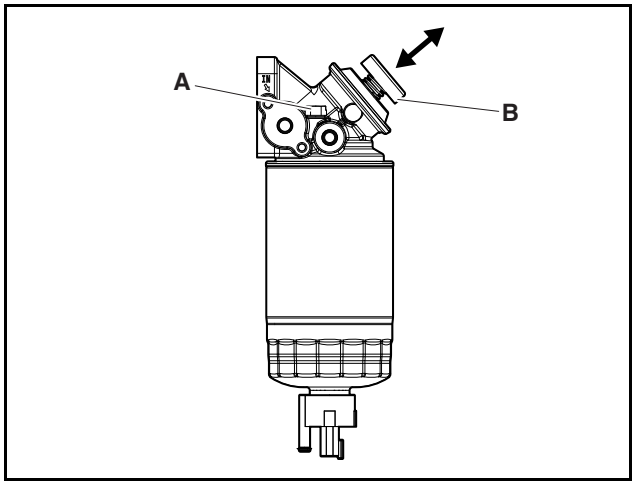

EDL02170036

1) Pump with the pump handle (B) until fuel is discharged through the air discharge valve (A).
3. Fasten the air discharging valve.

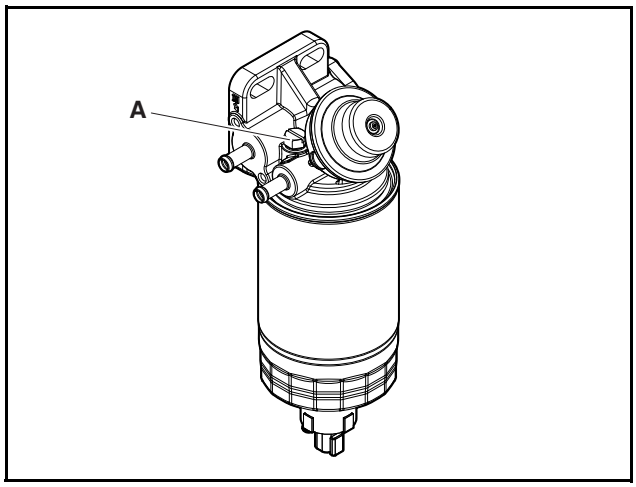

EDL02170035

1) Turn clockwise and fasten the air discharging valve (A).

Fuel Filter Draining

1. Loosen the drain valve.

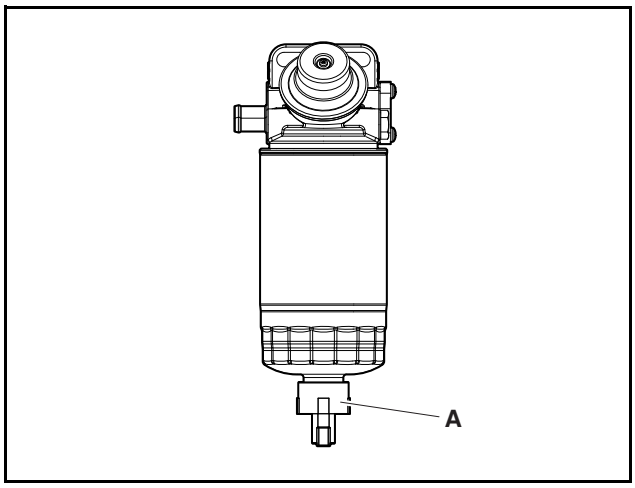

EDL02170037

1) Loosen the drain valve (A) at the bottom of the fuel filter.

⚠ CAUTION

Do not use tools to loosen the drain valve. Use of tools may damage the drain valve.

2. Drain the fuel filter.

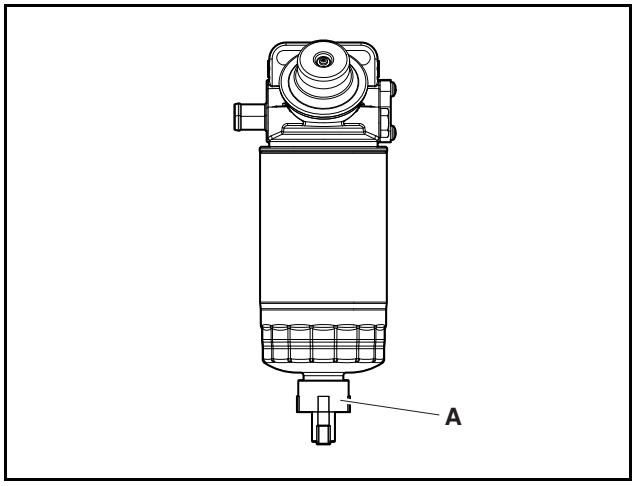

EDL02170037

1) Discharge water from the fuel filter through the drain valve (A) for about 10 seconds.

⚠ CAUTION

- **Periodically check the fuel filter and drain the water from it. Otherwise, moisture may flow into the fuel unit of the engine, resulting in critical faults in the fuel injection pump, the fuel injection pipe, the common rail, and injectors. In addition, the performance of the fuel filter may be degraded or damaged.**
- **Fuel may be drained when water is drained from the fuel filter. Fuel is highly inflammable. Fire may occur when you smoke or use fire near the engine when draining water from the fuel filter.**
- **Use clean, specified, and qualified fuel only. Using irregular or unspecified fuel may result in more water in the fuel filter.**
- **Drain the water from the fuel filter if the fuel filter alarm lamp is turned on. Otherwise, moisture may flow into the fuel unit, causing the engine to stop.**

3. Tighten the drain valve.

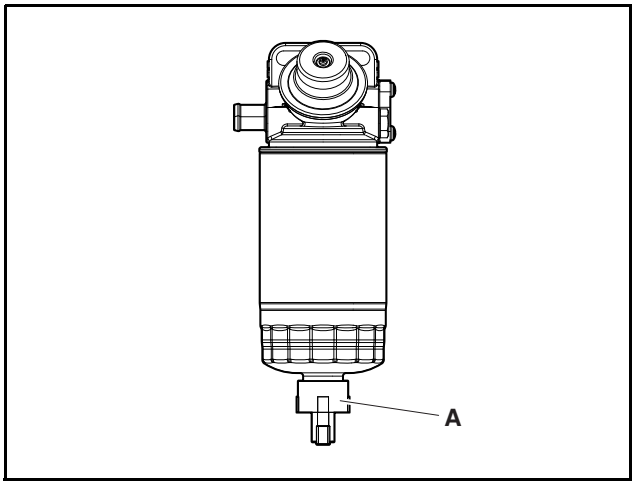

EDL02170037

1) Tighten the drain valve (A) at the bottom of the fuel filter.

⚠ CAUTION

Do not use tools to loosen the drain valve. Use of tools may damage the drain valve.

Others/driving system

Belt Tension

1. The belt is equipped with an auto tensioner which automatically adjusts the belt tension so there is no need for extra adjustment of the tension.
   During daily inspections, be sure to inspect whether the pointer on the auto tensioner is indicating that it is time for a replacement, as well as whether there is any damage to the belt due to external factors.

- Replacing the Micro V-Belt if necessary
  Replace the belt set in the event that the pointer on the auto tensioner indicates that it is time for a replacement, or cases where damage to the belt from external factors has been confirmed and there are concerns of severe damage occurring.

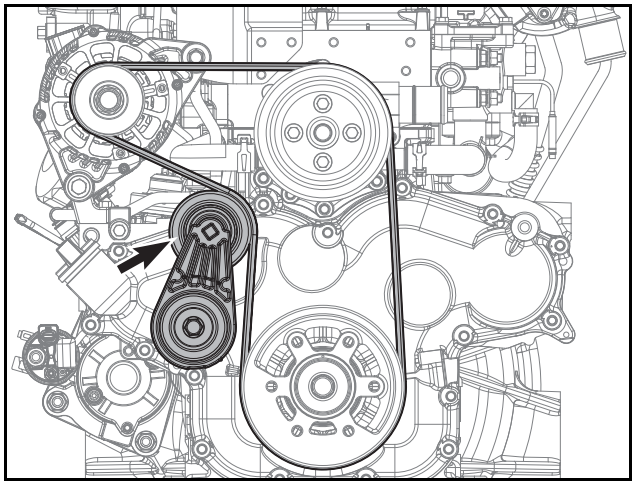

ED24190098

- Inspecting the condition
  Inspect the Micro V-belt for cracks, oil, overheating and wear.

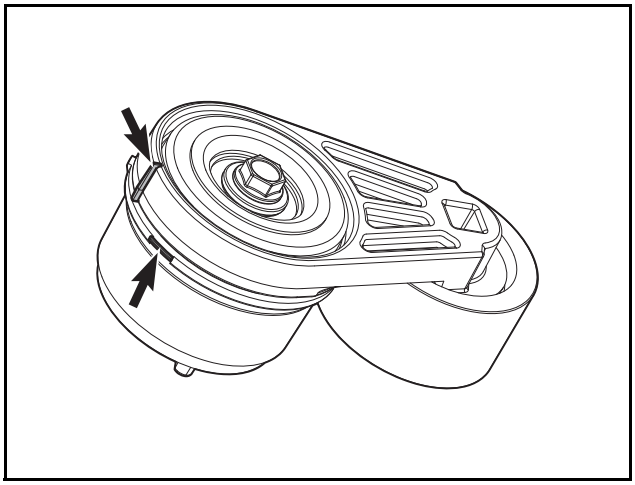

EDM03190329

- The vertical rod shown by the arrow is the "pointer," and the belt replacement period is indicated when this "pointer" enters the horizontal range shown in orange.

Note) The minimum/maximum range indication is a reference value; the belt must be inspected according to its maintenance schedule.

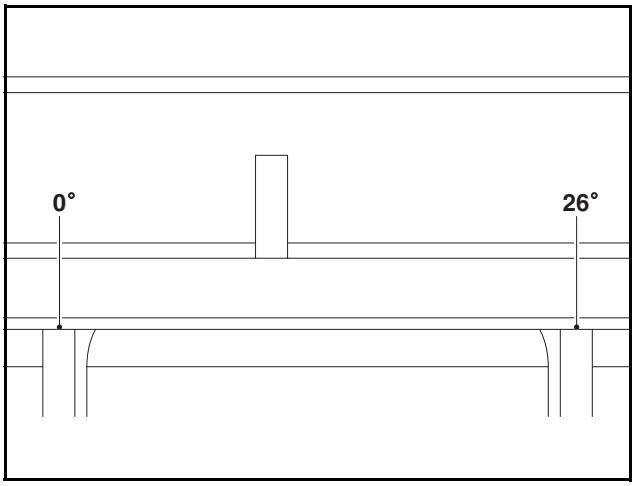

EDM02190122

5. About the engine

Marking system of units 63
Unit Conversion Methods..... 63
Tightening torque 64
Tightening Torque of Main Parts..... 64
Tightening Torque of General Bolts 65
Engine disassembly 66
Procedure of Disassembling an Engine..... 66
Engine assembly 78
Procedure of Assembling Engine..... 78

Marking system of units

Unit Conversion Methods

The following methods show how to convert SI units to US units and vice versa.

1. To convert an SI unit to a US unit, multiply a SI unit with the number in the following table.

Note) (SI Unit) X (Number) = (US Unit)

Note) 1mm X 0.03937 = 0.03937 in

2. To convert a US unit to an SI unit, divide the US unit by the number in the following table.

Note) (US Unit) ÷ (Number) = (SI Unit)

Note) 1 in ÷ 0.03937 = 25.4 mm

Item	Number	SI Unit	US Unit
Length	0.03937	mm	in
	3.28084	m	ft
	1.093613	m	yd
	0.621371	km	mile
Area	0.00155	mm^2	in^2
	0.1550	cm^2	in^2
	10.76391	m^2	ft^2
	1.19599	m^2	yd^2
Weight	2.204623	kg	lb
	0.001	kg	t (ton)
Volume	0.061024	cc	in^3
	0.061024	ml	in^3
	0.061024	cm^3	in^3
	61.023744	L	in^3
	0.264172	L	gal
Force[a]	2.204622	kgf	lbf
	0.2248089	N	lbf
Acceleration	3.28084	m/s^2	ft/s^2
	39.37008	m/s^2	in/s^2
Torque[b]	7.233014	kgf·m	lbf·in
	86.79619	kgf·m	lbf·in
	0.7375621	N·m	lbf·ft
	8.850748	N·m	lbf·in
Power	1.340483	kw	Hp
Pressure	0.01	kPa	bar
	7.500615	kPa	mmHg
	20.88543	kPa	lb/ft^2
	14.2233	psi	kg/cm^2
Electric Power	1.3596	kw	PS
	0.98635	ps	hp
Fuel Consumption	0.00162	g/kwh	lb/psh
Energy	0.000947817	J	BTU
	0.7375621	J	lbf·ft
	0.0002777778	J	Wh
Luminous Flux	0.09290304	lm/m^2	lm/ft^2
Speed	0.6213712	km/h	mph
Temperature	[c]	°C	°F

a. 9.806 x (kg·f) = (N)
b. 9.806 x (kgf·m) = (N·m)
c. {(9/5) x (°C)+32} = (°F)
{(°F)-32} x (5/9) = (°C)

Tightening torque

Tightening Torque of Main Parts

Major parts		Screw (Diameter x pitch)	Strength (Grade)	Tightening torque (kgf·m)	Remark
Cylinder block & Bed plate	Main bearing cap bolt (D18, D24)	M12 x 1.5	10.9T	Initial 5.5 ±0.28 + angle 90° ±4° + angle 90° ±4°	Not reusable (Tier-4 Final, Stage-V all)
	Main bearing cap bolt (D34)	M12 x 1.5	12.9T	Initial 5.5 ±0.28 + angle 90° ±4° + angle 90° ±4°	Not reusable (Tier-4 Final, Stage-V all)
	Bed plate bolt	M8 x 1.25	8.8T	2.2 ±0.22	
	Plug, screw (PT)	PT 3/8	-	6.5 ±0.5	
	Plug, screw Water drain plug (D18, D24)	M12 x 1.5	-	3.0 ±0.3	Oil filter ass'y
	Plug, screw Water drain plug (D34)	M12 x 1.5	-	5.0 ±0.5	
Oil spray nozzle valve		M10 x 1.25	-	2 ±0.2	
Flywheel housing, bolt		M10 x 1.5	10.9T	6.2 ±0.62	Not reusable (Tier-4 Final, Stage-V all)
CRS V pulley, bolt		M14 x 1.5	10.9T	26 ±1	Not reusable (Tier-4 Final, Stage-V all)
Connecting rod bolt (D18, D24)		M8 x 1.0	10.9T	1st: 2.0 ±0.1 / 2nd: 90° ±4°	
Connecting rod bolt (D34)		M9 x 1.0	10.9T	1st: 3.0 ±0.15 / 2nd: 90° ±4°	
MBS bolt (D34, option)		M10 x 1.5	10.9T	Initial 6.0 ±0.3 + angle 90° ±4° + angle 90° ±4°	
Flywheel bolt (25 mm, option) for flat type flywheel		M12 x 1.5	12.9T	15 ±0.75	
Flywheel bolt (43 mm, option)		M12 x 1.5	10.9T	1st: 7 ±0.35 / 2nd: 45° ±4°	Not reusable
Head bolt (D18, D24)		M11 x 1.25	9T	Initial 4.0 ±0.2 + angle 90° ±4° + angle 90° ±4° + angle 90° ±4°	Not reusable (Tier-4 Final, Stage-V all)
Head bolt (D34)		M12 x 1.25	9T	Initial 4.5 ±0.23 + angle 90° ±4° + angle 90° ±4°	Not reusable (Tier-4 Final only)
				Initial 6.0 ±0.3 + angle 90° ±4° + angle 90° ±4°	Not reusable (Stage-V only)
Head cover bolt (LH, RH)		M6 x 1.0	8.8T	1 ±0.1	
Head cover bolt (Main)		M6 x 1.0	8.8T	1 ±0.1	
EX manifold bolts		M8 x 1.25 (60mm)	10.9T	3.4 ±0.3	
Injector fixture bolts		M8 x 1.25	12.9T	4.4 ±0.4	
HP pump drive gear nut		M18 x 1.5	-	8.2 ±0.5	
HP pump MTG nut		M8 x 1.25	-	2.2 ±0.22	
HP pipe nut - injector to rail		Union nut	-	3.0 ±0.3	
HP pipe nut - rail to pump		Union nut	-	3.0 ±0.3	
Thermostat MTG space bolt		M8 x 1.25	8.8T	2.2 ±0.22	

Major parts	Screw (Diameter x pitch)	Strength (Grade)	Tightening torque (kgf·m)	Remark
Thermostat plug	UNF 3/4 - 16	-	1.75 ±0.25	
Oil pan drain plug	UNF 3/4 - 16	-	3 ±0.3	
Glow plug body	M8 x 1.0	-	1.05 ±0.15	
Glow plug terminal	M4 x 0.7	-	0.165 ±0.035	
Turbocharger hollow screw	M10 x 1.0	-	1.9 ±0.1	
Turbocharger MTG nut	M8 x 1.25	-	2.2 ±0.22	
Water pump MTG nut	M8 x 1.25	-	2.2 ±0.22	
Rocker arm adjusting hex nut	M8 x 1.0	-	1.5 ±0.15	
Camshaft thrust washer bolt	M8 x 1.25	8.8T	2.2 ±0.22	
Idle gear shaft bolt	M10 x 1.5	8.8T	4.4 ±0.44	
Rocker arm Brkt bolt	M8 x 1.25	8.8T	2.2 ±0.22	
PTO housing bolt	M10 x 1.5	12.9T	4.4 ±0.44	
PTO (D24)	M8 x 1.25	8.8T	2.2 ±0.22	Stage-V only
PTO (D34)	M8 x 1.25	8.8T	2nd: 2.2 ±0.22	Stage-V only
	M10 x 1.5	12.9T	1st: 4.4 ±0.44	Not reusable (Tier-4 Final)
Alternator nut	M8 x 1.25	-	2.2 ±0.22	
Alternator bolt	M8 x 1.25	8.8T	2.2 ±0.22	
Starter nut	M10 x 1.5	-	4.4 ±0.44	
Idle pulley ass'y bolt	M10 x 1.5	-	4.5 ±0.5	
Extension hose Brkt bolt (Fuel)	M12 x 1.75	8.8T	5.5 ±0.55	
Worm drive type clamp	-	-	0.6 ±0.09	
Band clamp (DOC & SCR)	-	-	1.4 ±0.1	
V-clamp (Exhaust pipe)	-	-	1.0 ±0.1	
Oil pressure sensor	M14 x 1.5	-	1.0 ±0.1	
EGT sensor*	M14 x 1.5	-	4.0 ±0.5	
Water temp. sensor	M12 x 1.5	-	2.5 ±0.3	

* EGT sensor Stage-V only.

Tightening Torque of General Bolts

Tightening Torque of Key General Bolts

Strength Classification	Nominal Diameter X Pitch (mm)							
	M6 x 1	M8 x 1.25	M8 x 1	M10 x 1.5	M10 x 1.0	M12 x 1.75	M12 x 1.5	M14 x 1.5
	Tightening Torque (kgf·m) ±10%							
8.8T	1 ±0.1	2.2 ±0.22	2.4 ±0.24	4.4 ±0.44	5 ±0.5	7.5 ±0.75	8 ±0.8	13 ±1.3
10.9T	1.25 ±0.13	3.1 ±0.31	3.35 ±0.34	6.2 ±0.62	7 ±0.7	10.5 ±1.05	11.2 ±1.12	18.5 ±1.85
12.9T	1.5 ±0.15	3.8 ±0.38	4.1 ±0.41	7.4 ±0.74	8.4 ±0.84	12.5 ±1.25	13.4 ±1.34	22 ±2.2

Engine disassembly

Procedure of Disassembling an Engine

⚠ CAUTION

- **Prepare tools and genuine parts necessary before disassembling engine.**
- **Prepare a shelf for the storage of removed parts.**
- **Perform repairs in a light and clean space.**
- **Keep hands clean while performing repairs.**
- **Keep parts removed from the engine in the order of disassembly.**
- **Do not allow parts removed from the engine to touch each other or be mixed with other parts.**

Disassemble the engine in the following order.

1. Drain coolant.

1) Check if the engine and radiator are cooled.
2) Place a container in front of the coolant drain plug.
3) Remove the radiator cap.
4) Remove the coolant drain plug of the radiator and then drain coolant.
5) After completing coolant drain, reconnect the coolant drain plug.

⚠ DANGER

- **If the radiator cap is opened while the engine is hot, hot water will spurt out and may cause serious burns. Open the radiator cap after making sure that the engine has been fully cooled.**
- **Mark and separately manage the containers for storing coolant from beverage containers to avoid confusion. See a doctor immediately in case of drinking coolant.**

⚠ WARNING

Discard coolant according to the regulations set forth by the relevant authorities. Disposing of discharged coolant into the ground, sewers, drains, rivers, or the sea will cause serious environmental pollution. Violation of regulations when discarding engine oil without observing the handling regulations, will be punished.

⚠ CAUTION

Be careful not to get coolant on any belts or electric apparatus when replacing the coolant.

2. Drain the engine oil.

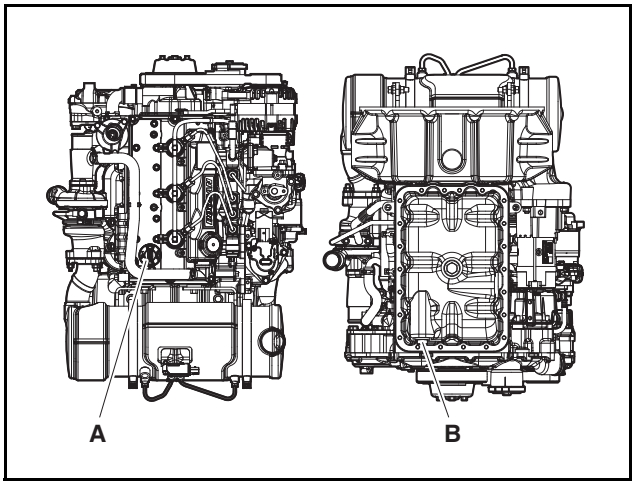

ED18190043

1) Place a container under the engine to drain the engine oil.
2) Remove the oil cap (A).
3) Remove the drain plug (B) and drain the engine oil.

⚠ WARNING

Discard oil according to the regulations set forth by the relevant authorities. Disposing of discharged oil into the ground, sewers, drains, rivers, or the sea will cause serious environmental pollution. Violation of regulations when discarding engine oil without observing the handling regulations, will be punished.

3. Detach the air cooler and cooling fan from engine.
4. Detach the engine from the machine.
5. Disconnect the cables and harness connected to each sensor of the engine.
6. Remove the V-belt.

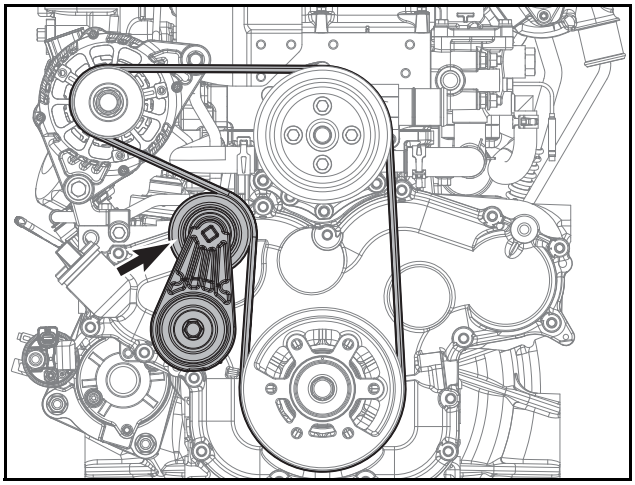

ED18190044

1) Turn the auto tensioner counterclockwise by using a quadrangular groove at the top of the auto tensioner pulley (Use a 10 mm x 10 mm quadrangular tool).
2) Remove the belt wound around the auto tensioner pulley by using a space generated by the rotation of the auto tensioner.

7. Detach the alternator.

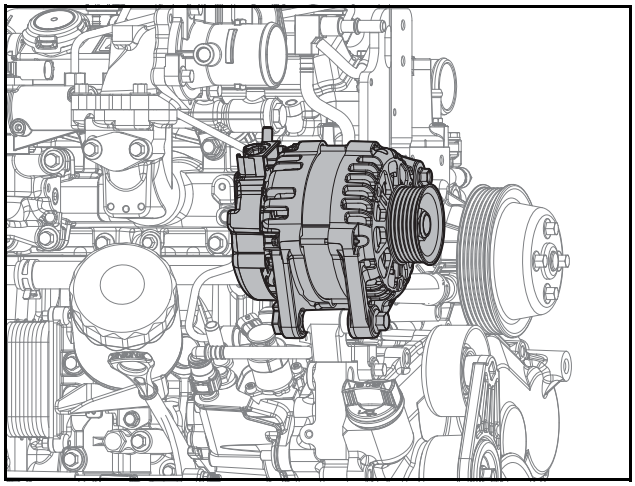

ED18190045

1) Loosen the upper/lower bolt and remove the alternator.
2) When loosing bolt, take care not to lose nut.

8. Detach the starter.

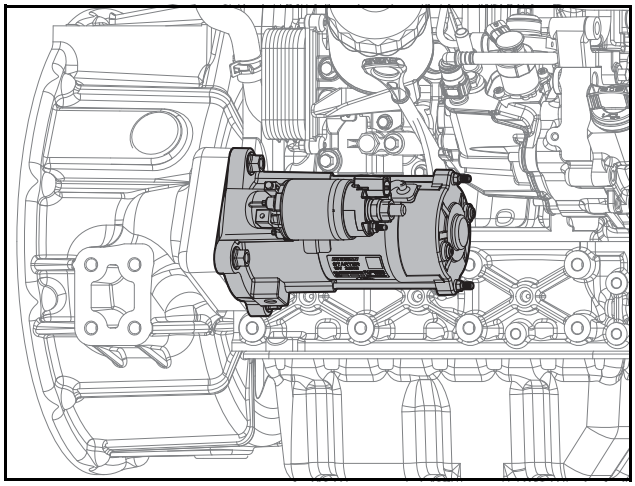

ED18190046

1) Loosen 3 flange nuts.
2) Detach the starter.

9. Remove the flywheel.

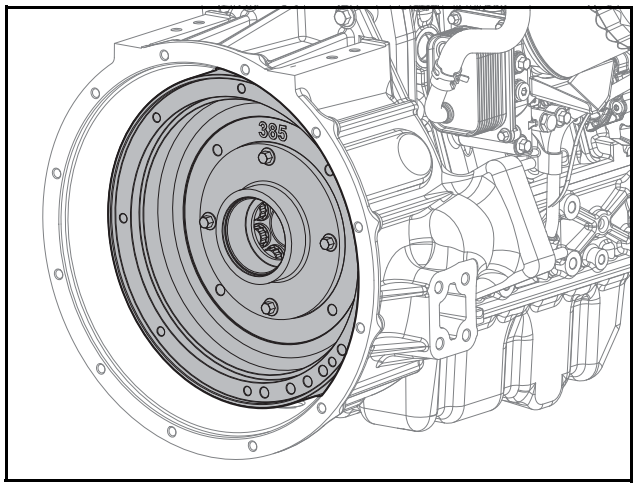

ED18190047

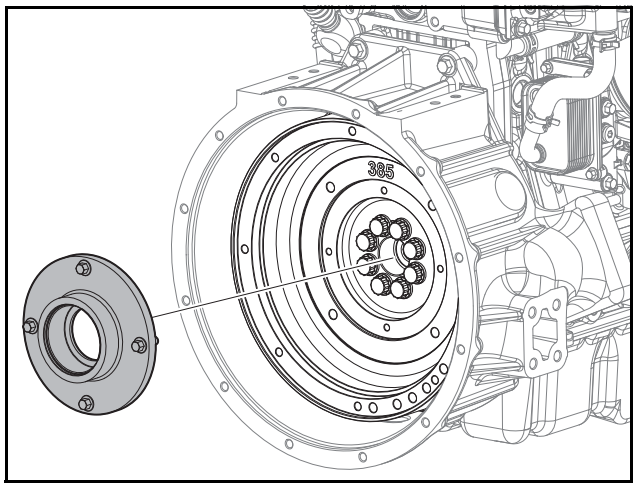

ED18190048

1) Loosen 8 flange hex bolts.
2) Remove the flywheel.

10. Remove the flywheel housing.

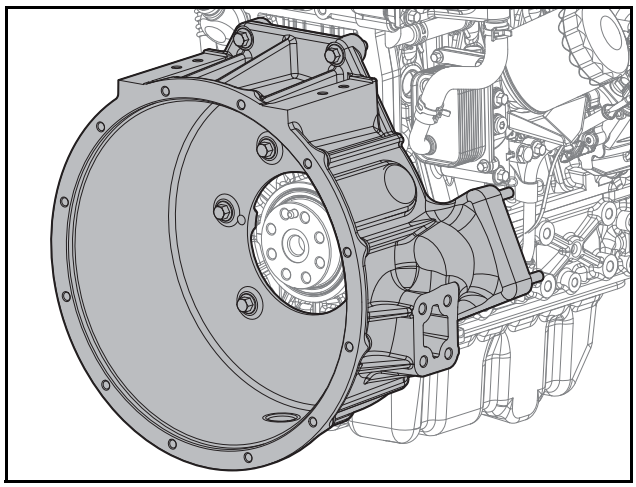

ED18190049

1) Loosen 8 hex bolts.
2) Remove the flywheel housing.

11. Disconnect the breather hose.

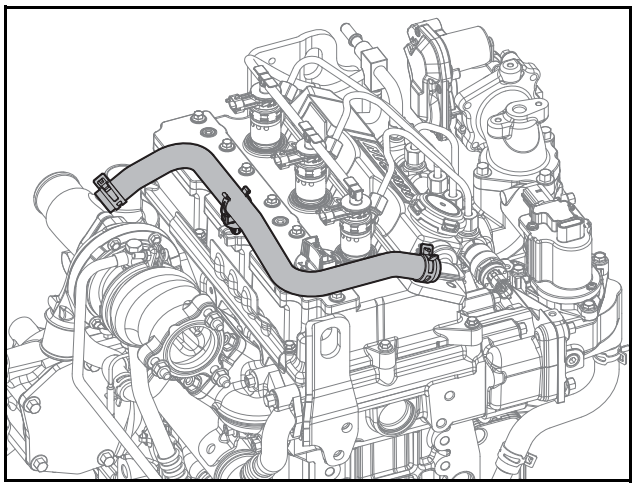

ED18190050

1) Remove the hose clamps.
2) Disconnect the breather hose.

12. Disconnect the throttle (inlet pipe) and the intake stake.

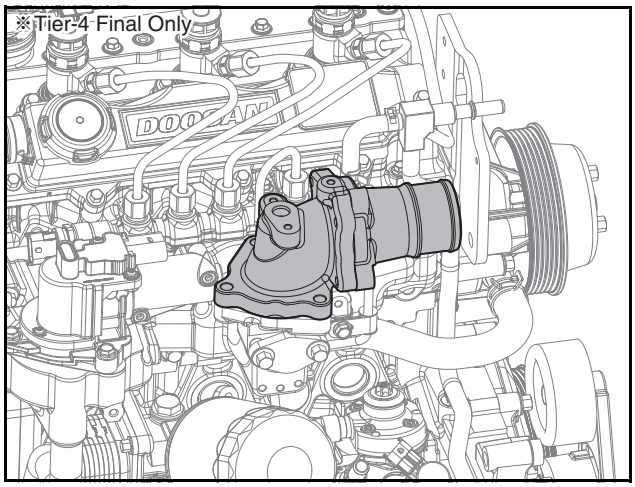

ED18190180

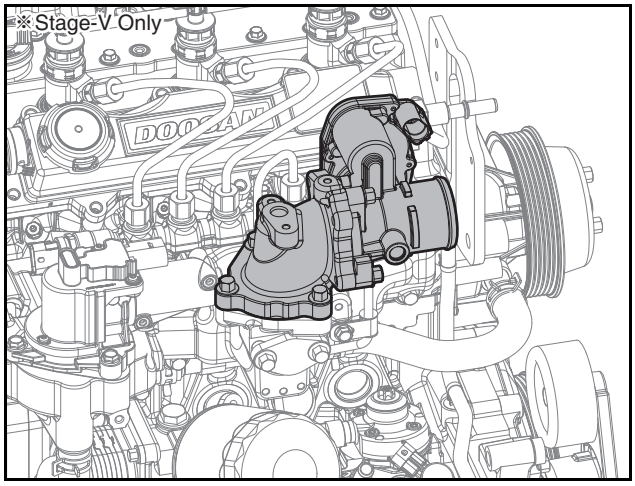

ED18190051

1) Loosen 3 hex bolts.
2) Remove the throttle (inlet pipe) and the gaskets from the intake stake.
3) Loosen 3 hex bolts.
4) Remove the intake stake from the intake manifold.

13. Disconnect oil level gauge and coolant hose.

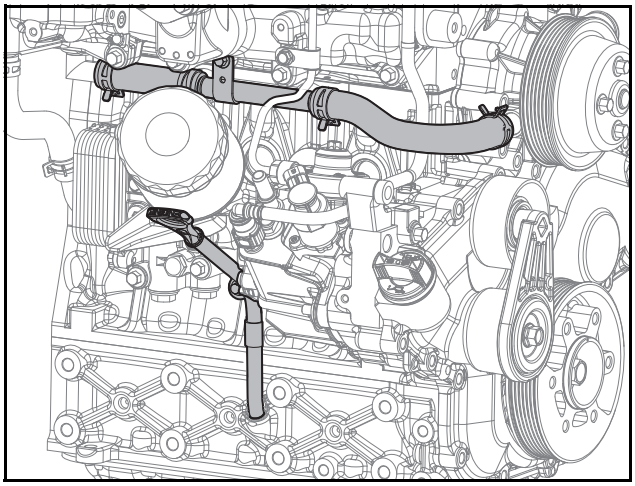

ED1819089

1) Loosen the flange hex bolt.
2) Remove the hose clamp.
3) Disconnect the coolant hose.
4) Remove the oil level gauge.
5) Loosen the flange hex bolt.
6) Disconnect the oil level gauge guide tube.

14. Remove the turbocharger.

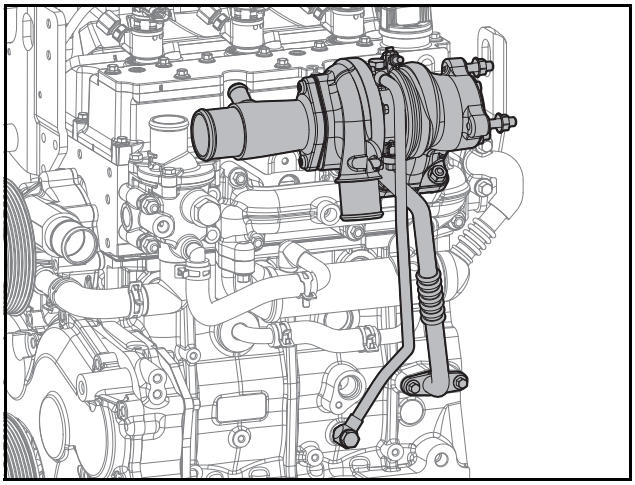

ED18190052

1) Loosen 2 hex bolts and remove the heat screen. (if needed)
2) Loosen 2 hollow screws and disconnect the oil delivery pipe.
3) Loosen 4 flange hex bolts.
4) Disconnect the oil return pipe.
5) Loosen 4 flange hex nuts.
6) Remove the turbocharger and the gasket.

15. Remove the EGR cooler.

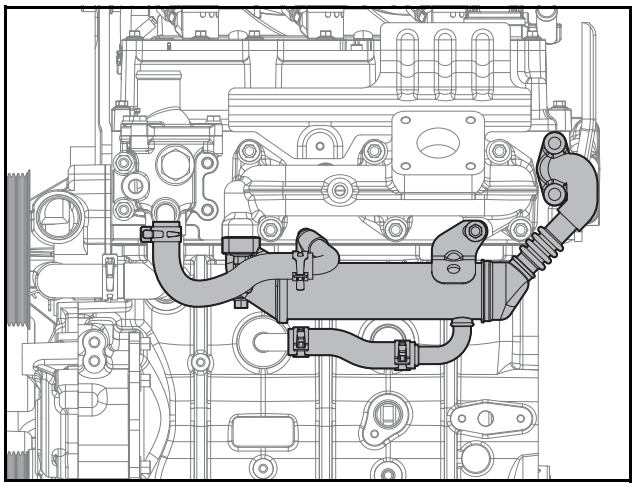

ED18190053

1) Remove the hose clamp.
2) Disconnect 2 hose.
3) Loosen 5 flange hex bolt.
4) Remove EGR cooler and 2 gasket.

⚠ CAUTION

Exhaust gas make engine parts extremely hot. Only remove the parts when they have fully cooled to prevent burns.

16. Remove the thermostat.

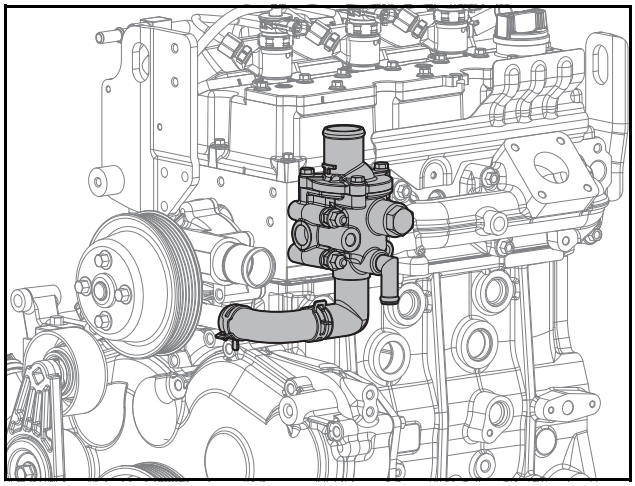

ED18190054

1) Remove the hose clamps.
2) Disconnect the rubber hose.
3) Loosen 2 flange hex bolt, 2 space bolt and 2 flange hex nut.
4) Remove thermostat.

17. Remove the exhaust manifold.

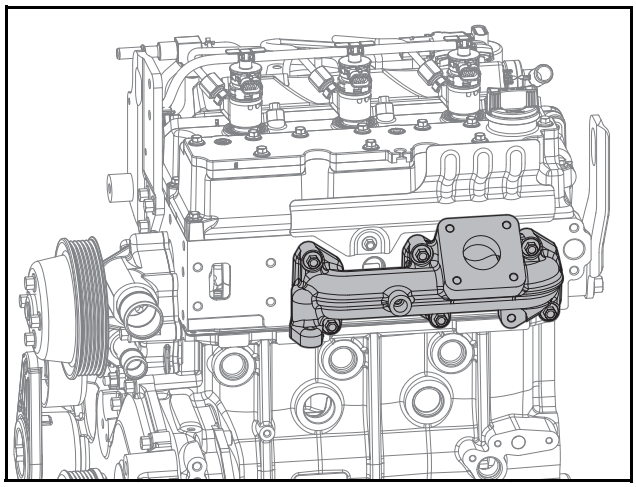

ED18190055

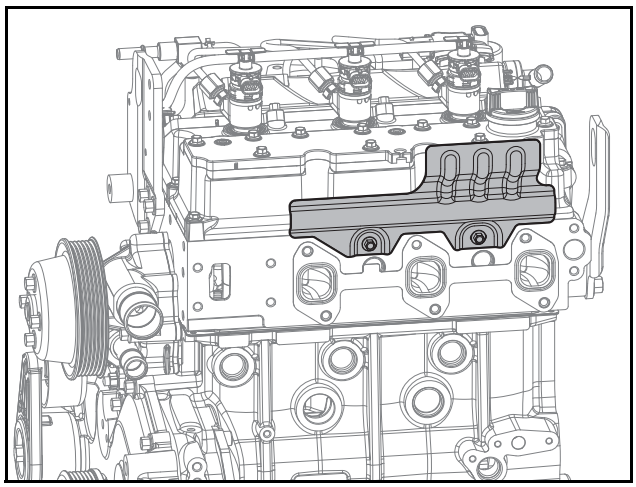

ED18190088

1) Loosen 6 flange hex bolts.
2) Remove the exhaust manifold and the gasket.
3) Loosen 2 flange hex bolts.
4) Remove the heat shield.

⚠ CAUTION

Exhaust gas make engine parts extremely hot. Only remove the parts when they have fully cooled to prevent burns.

18. Remove the coolant pump pulley.

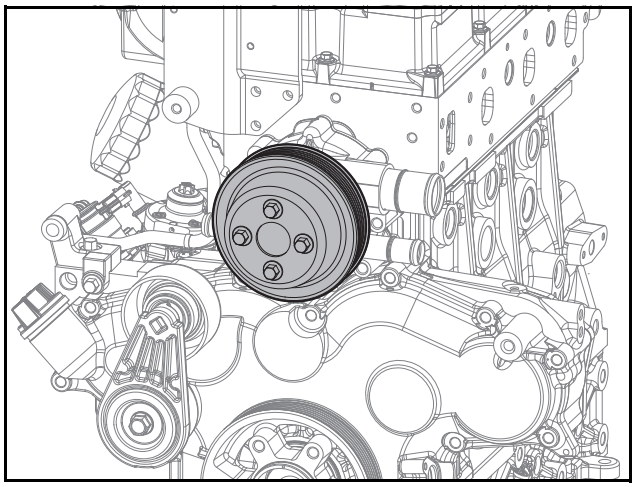

ED18190056

1) Loosen 4 hex bolts.
2) Remove the coolant pump pulley.

19. Remove the coolant pump.

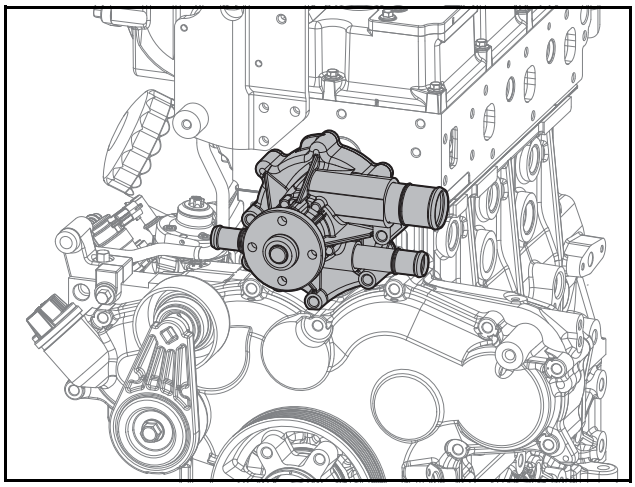

ED18190057

1) Loosen 4 hex bolt and 2 flange hex nut.
2) Remove the coolant pump and the gasket.

20. Remove the lifting hooks.

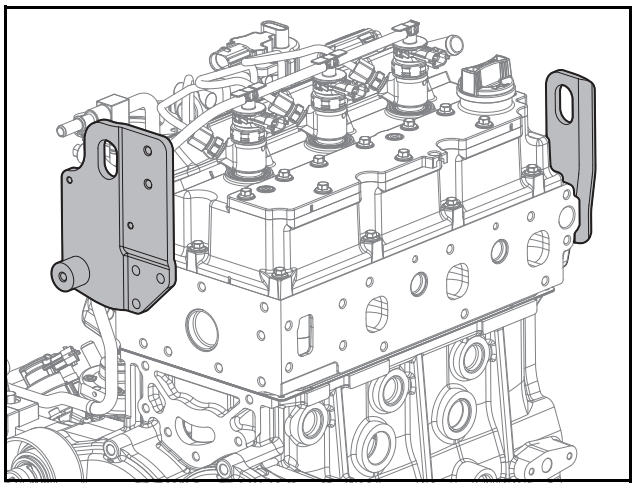

ED18190058

1) Loosen flange bolt.
2) Remove the lifting hooks.

21. Disconnect the fuel return hose.

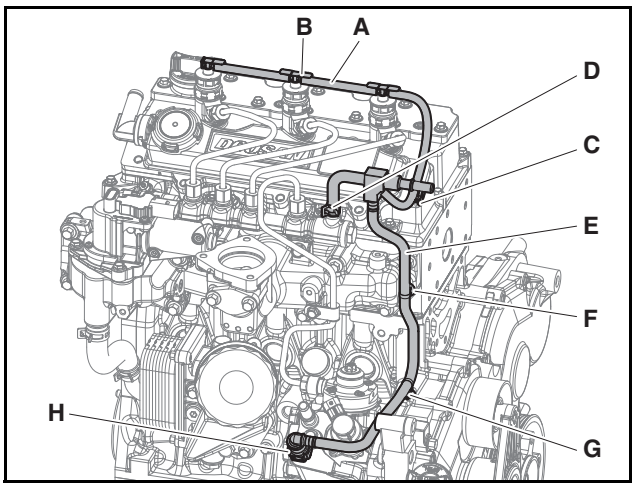

ED18190059

1) Open the adopter (B) of injector return hose (A).
2) Loosen the injector return hose (A).
3) Remove the edge clip (C).
4) Loosen the hose clamp (D).
5) Remove the cable tie (F), (C).
6) Disconnect the quick connector (H).
7) Disassemble the fuel return hose (A) and (E).

22. Disconnect the fuel injection pipes.

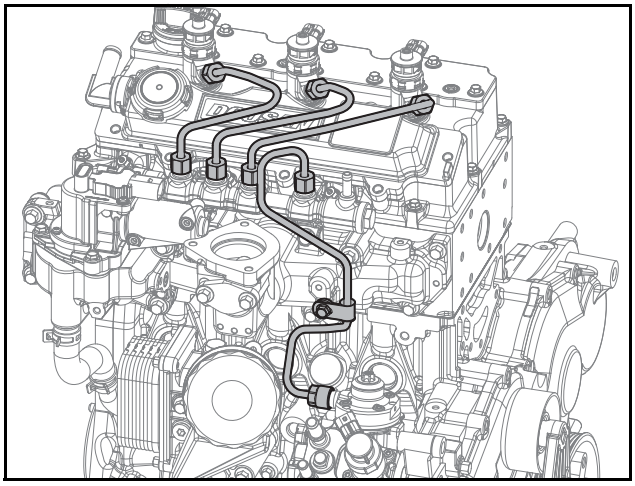

ED18190060

1) Loosen the nuts connected to the injector and the common rail.
2) Disconnect the fuel injection pipes.
3) Loosen the nuts connected to the common rail and the fuel injection pump.

4) Disconnect the fuel injection pipes.

⚠ CAUTION

Do not reuse fuel injection pipes and clamp; replace them with new ones.
If fuel injection pipes and clamp are reused it may allow foreign substances into the fuel pipes or cause oil leaks from bolt clamping and cause a critical fault in engine performance.

23. Detach the common rail.

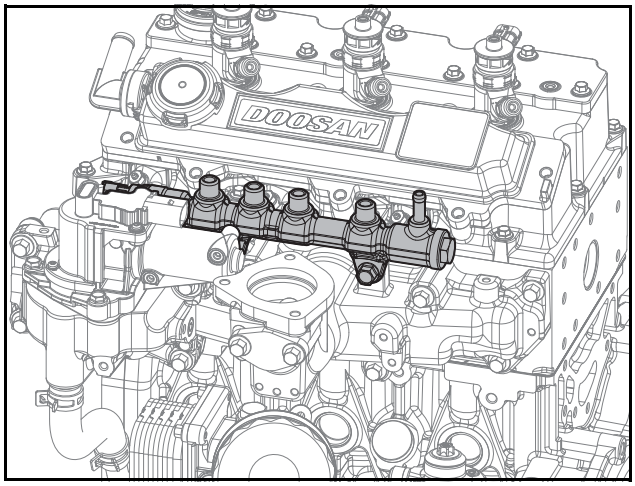

ED18190061

1) Loosen 2 hex bolts.
2) Remove the common rail from the intake manifold.

24. Disconnect the EGR valve.

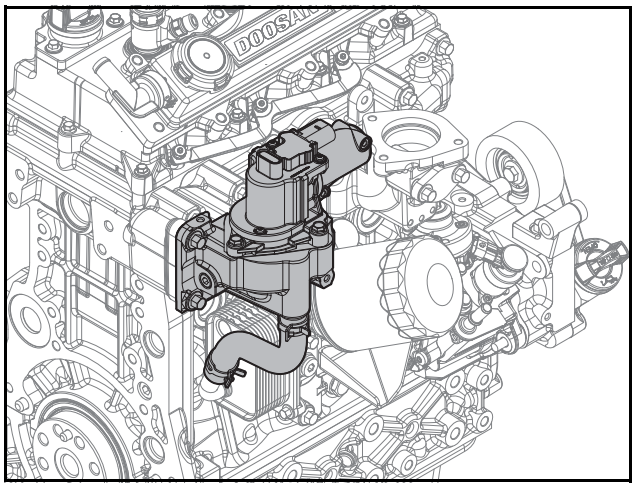

ED18190062

1) Remove the hose clamps.
2) Disconnect the hose.
3) Loosen 4 flange hex bolt.
4) Remove EGR valve and gasket.

25. Detach the oil cooler and the oil filter module.

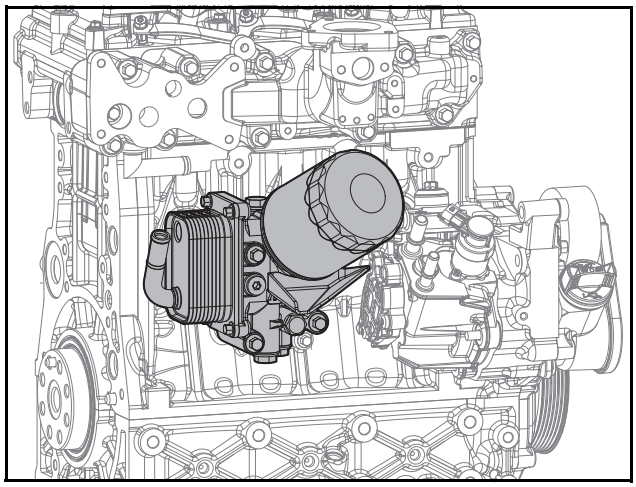

ED18190063

1) Detach the oil filter with the filter wrench.

⚠ CAUTION

Oil in the filter may run down while detaching the oil filter. Be careful not to contaminate the other parts by using a cloth when detaching the filter. After replacing the oil filter, wipe clean any other parts which the oil has touched.

2) Remove the oil filter module and the O-rings.
3) Loosen 3 flange hex bolts.
4) Remove the oil cooler and the O-rings from the oil filter module.

26. Remove the intake manifold.

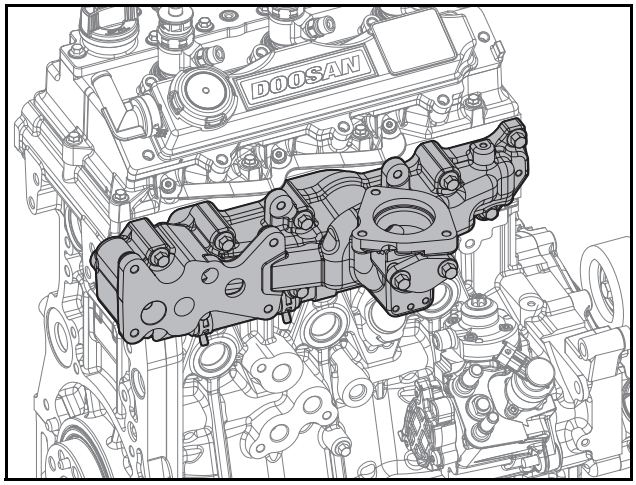

ED18190064

1) Loosen 13 flange hex bolt.
2) Remove the intake manifold and the gasket.
3) Loosen 2 flange hex bolts.
4) Remove EGR mixer and gasket.

27. Remove the right cylinder head cover.

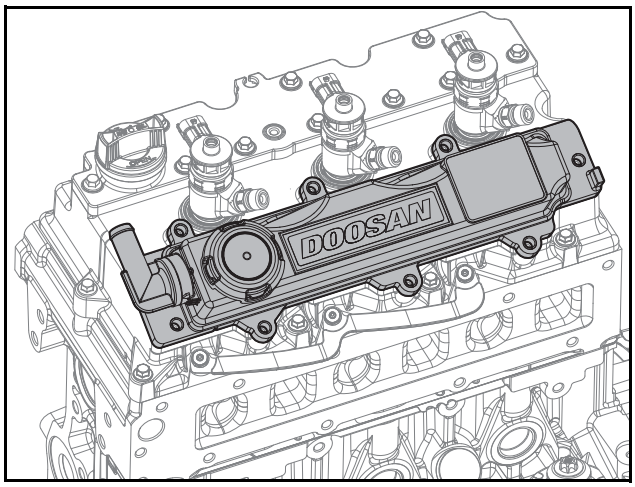

ED18190065

1) Loosen 8 flange hex bolts.
2) Remove the right cylinder head cover.

28. Remove the injector.

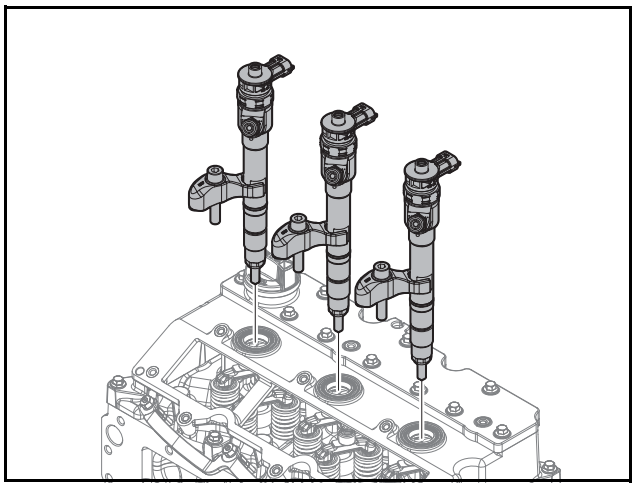

ED18190066

1) Loosen 3 hex bolts.
2) Remove 3 injector fixtures.
3) Remove 3 injectors.

Note) Remove the cylinder head cover and remove the injector seal ring washers.

⚠ CAUTION

- **Be careful not to damage the injector oil seal of the cylinder head cover.**
- **Remove it by turning the injector slowly from left to right.**
- **Do not reuse the injector seal ring washers. Reuse of the injector seal ring washers may cause critical damage to the engine due to unstable combustion.**

29. Disconnect the glow plugs.

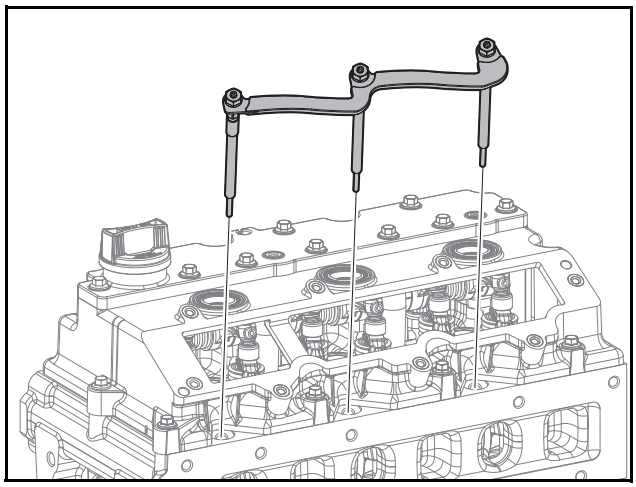

ED18190067

1) Loosen 3 hex nuts.
2) Remove the electric connector.
3) Disconnect 3 glow plugs.

30. Remove the cylinder head cover.

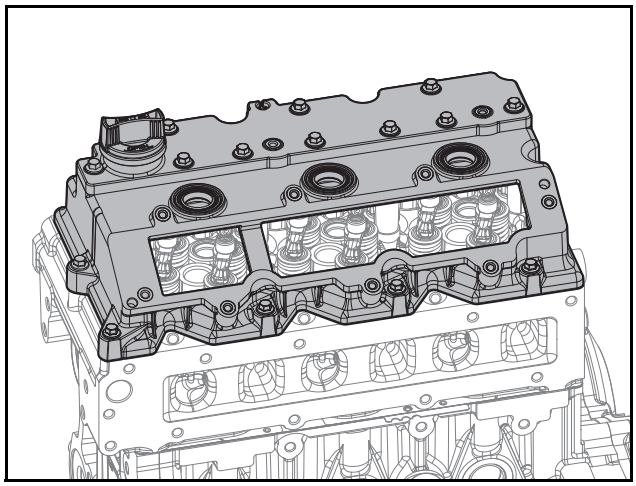

ED18190068

1) Loosen 10 hex bolts.
2) Remove the cylinder head cover.

31. Remove the rocker arm.

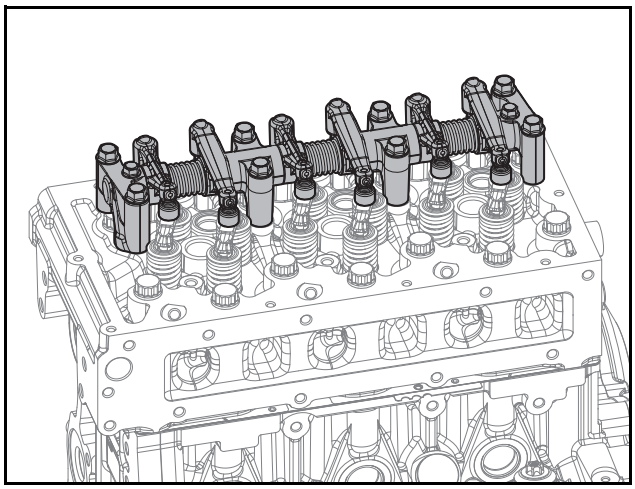

ED18190069

1) Loosen 8 flange hex bolts.
2) Remove the rocker arm.

32. Remove the push rods.

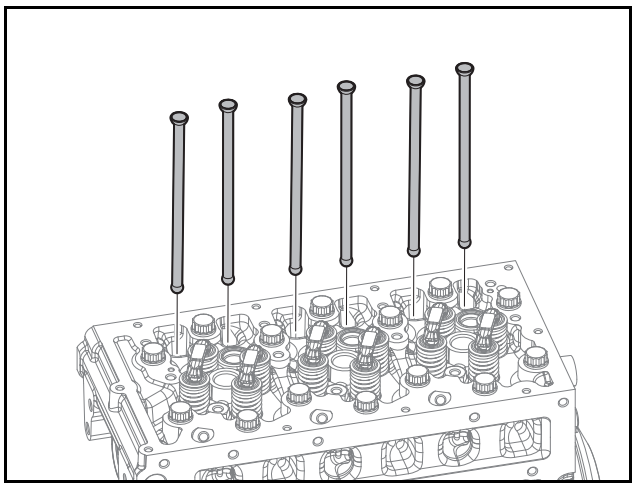

ED1819070

1) Remove the push rods.

33. Detach the cylinder head.

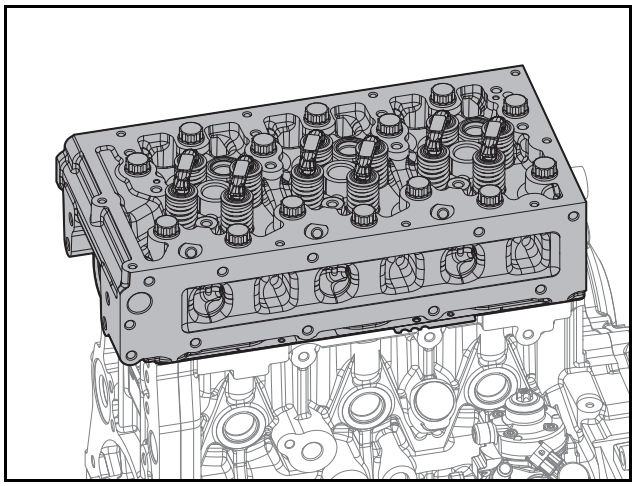

ED1819071

1) Loosen 14 cylinder head bolts.
2) Detach the cylinder head.
3) Remove the cylinder head gasket.

34. Remove the valve spring.

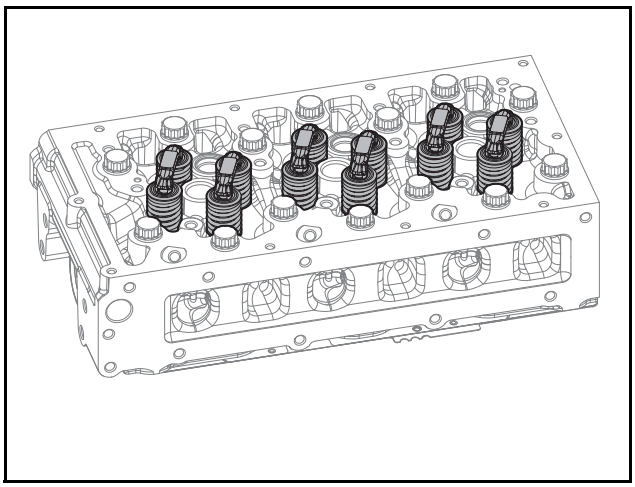

ED1819072

1) Remove the calipers.
2) Compress the valve with the valve spring compression tool.
3) Remove the valve cotters.
4) Remove the valve spring retainers.
5) Remove the valve springs.

35. Remove the valves.

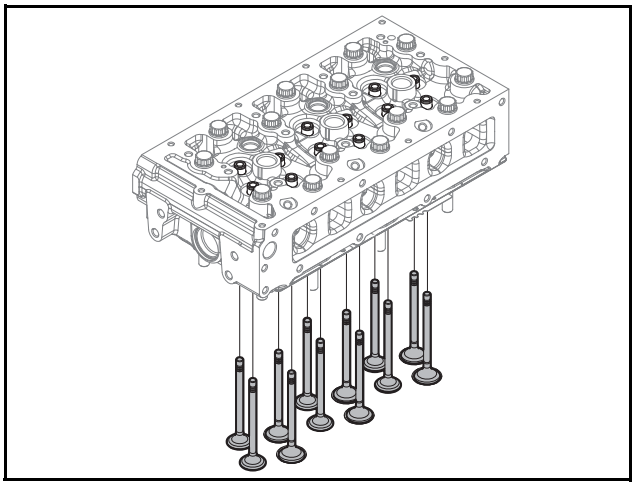

ED1819073

1) Remove the valves from the cylinder head.
2) Remove the valve stem seals.
3) Remove the spacer seal rings.

36. Remove the crankshaft pulley.

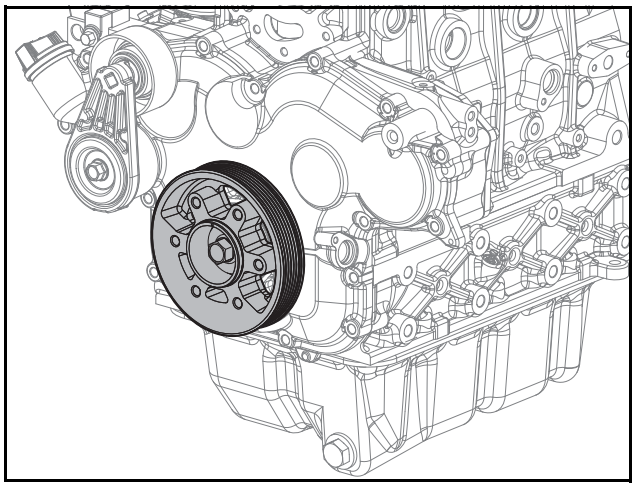

ED1819074

1) Loosen the flange hex bolt.
2) Remove the crankshaft pulley.

⚠ CAUTION

Be careful not to damage the oil seal.

37. Remove the timing gear case.

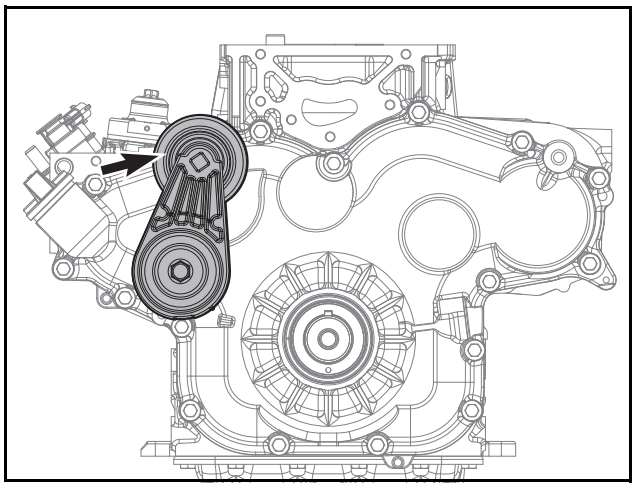

ED24190138

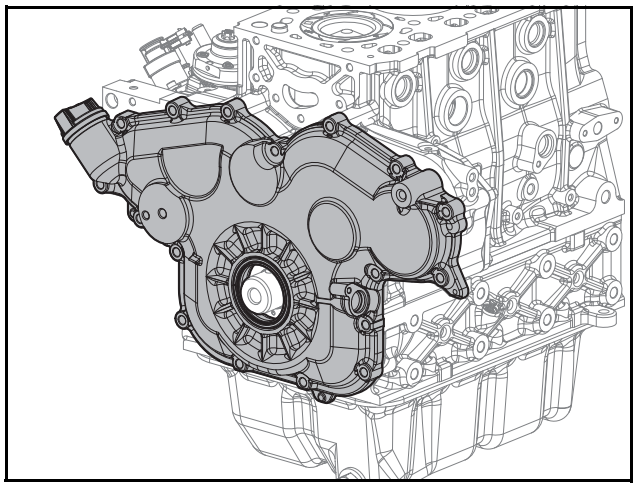

ED1819076

1) Loosen the flange hex bolt and remove the auto tensioner.
2) Loosen the fixing bolt and remove the crank speed sensor.
3) Loosen 16 hex bolts.
4) Remove the timing gear case.

⚠ CAUTION

Do not reuse the oil seal; replace them with new ones.

38. Remove the timing wheel.

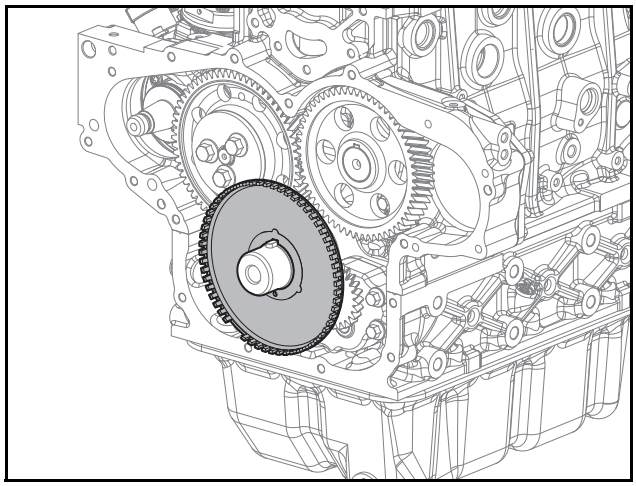

ED1819077

1) Remove the timing wheel.

39. Remove the fuel injection pump.

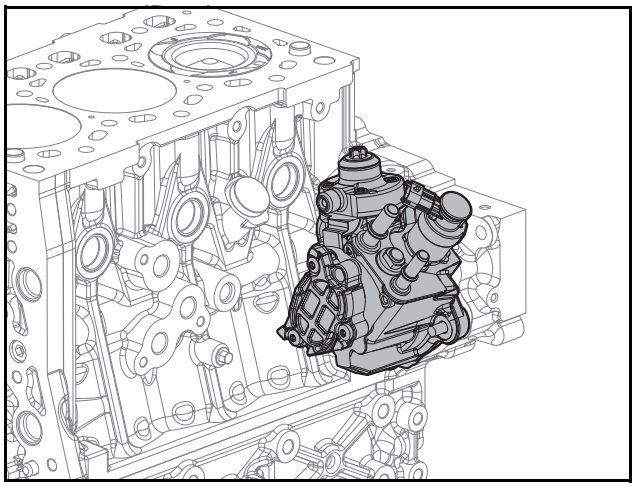

ED1819078

1) Loosen 3 flange hex nuts.
2) Remove the fuel injection pump.
3) Loosen the flange hex nut.
4) Remove the collar.
5) Remove the O-ring from the collar.

⚠ CAUTION

Do not reuse the O-ring; replace with a new one. Reuse of the O-ring may cause critical damage to engine performance to occur.

40. Remove the PTO (Power Take Off) cover & gasket.

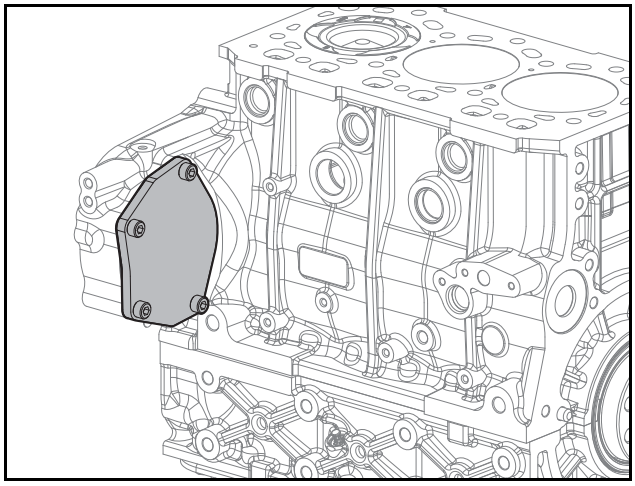

EDM01200075

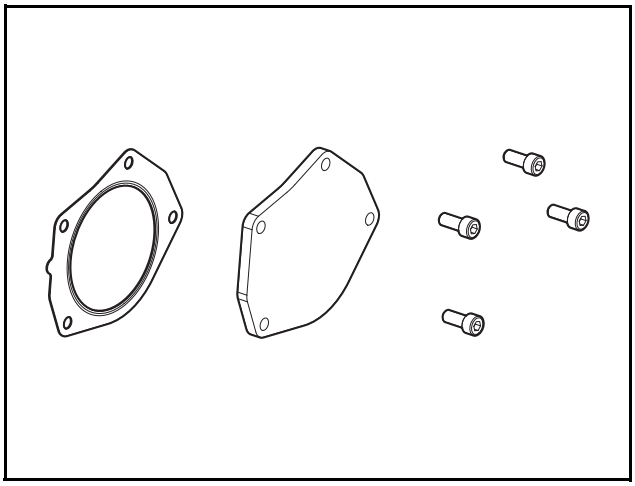

EDM03190319

1) Remove 4 inner socket bolts from the PTO (Power Take Off) cover & gasket.
2) Remove the PTO (Power Take Off) cover & gasket.

41. Remove the oil pan.

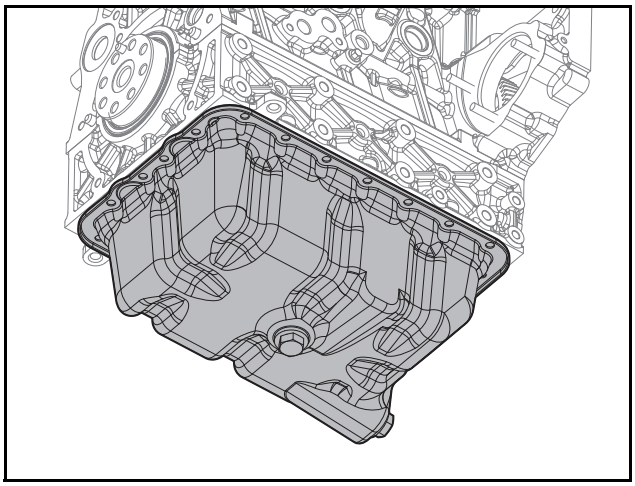

ED1819079

1) Remove the drain plug.
2) Remove the O-ring.
3) Loosen 22 flange hex bolts.
4) Remove the oil pan.

42. Disconnect the oil suction pipe and oil delivery pipe.

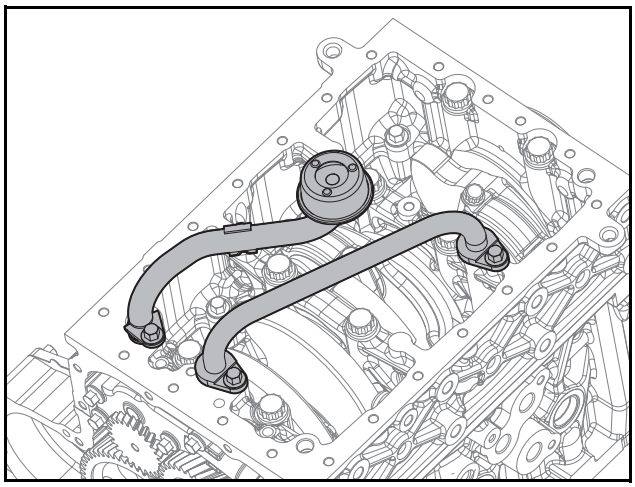

ED1819080

1) Loosen 2 hex bolts.
2) Remove the oil suction pipe and 1 O-ring.
3) Loosen 2 hex bolts.
4) Disconnect the oil delivery pipe and 2 O-rings.

43. Remove the oil pump.

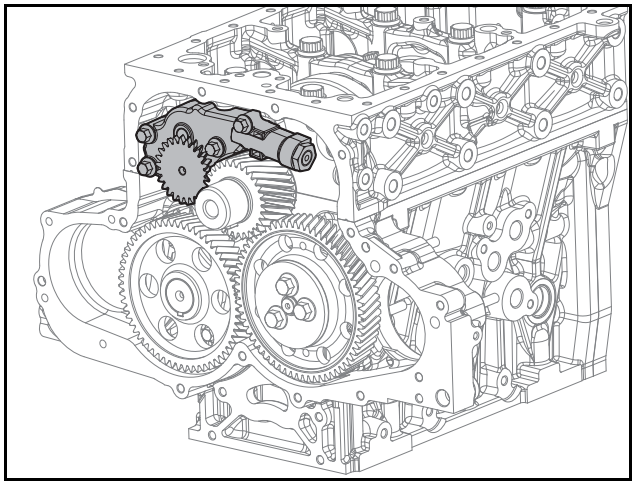

ED1819081

1) Loosen 4 hex bolts.
2) Remove the oil pump and 2 O-rings.

44. Remove the idle gear.

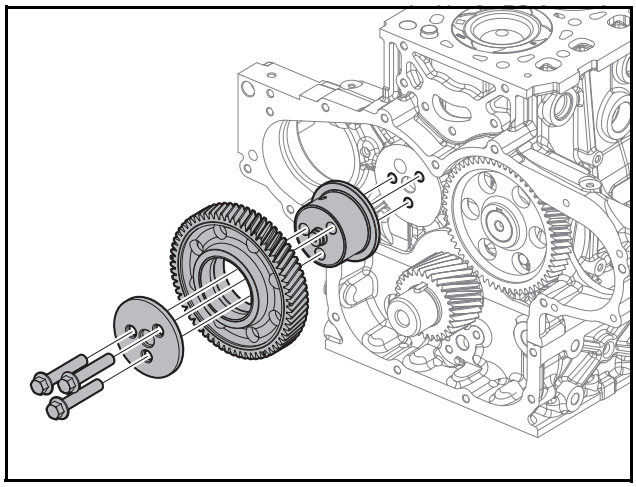

EDM01200076

1) Loosen 3 flange hex bolts.
2) Remove the idle gear shaft.
3) Remove the idle gear.

45. Remove the crank case.

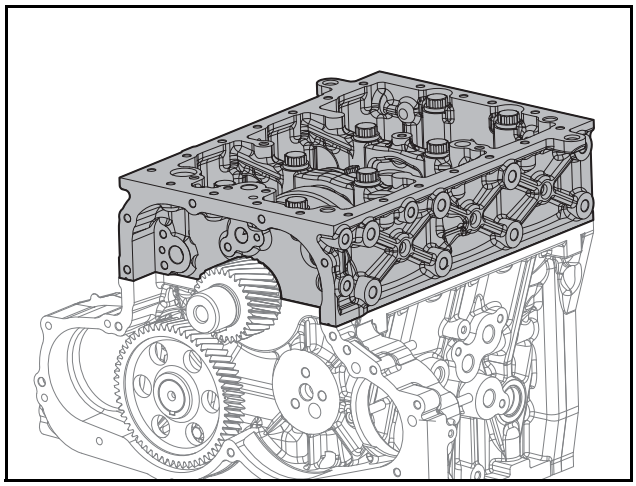

ED1819087

1) Remove the rear oil seal with oil seal disassembly jig.

⚠ CAUTION

Do not reuse the oil seal; replace it with a new one.

2) Loosen 12 hex bolts.
3) Loosen 8 main bearing cap bolts.
4) Remove the crank case.
5) Loosen 4 bottom main bearings from the crank case.

46. Remove the crankshaft.

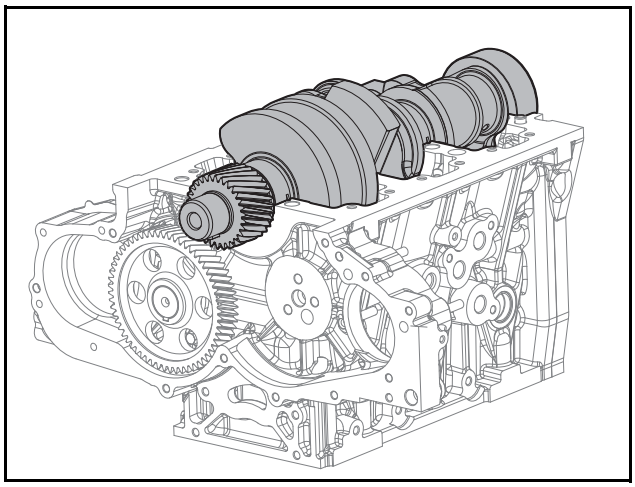

ED1819086

1) Remove 2 thrust washers.
2) Remove the crankshaft.
3) Remove the top main bearings from the cylinder block.

47. Remove the camshaft.

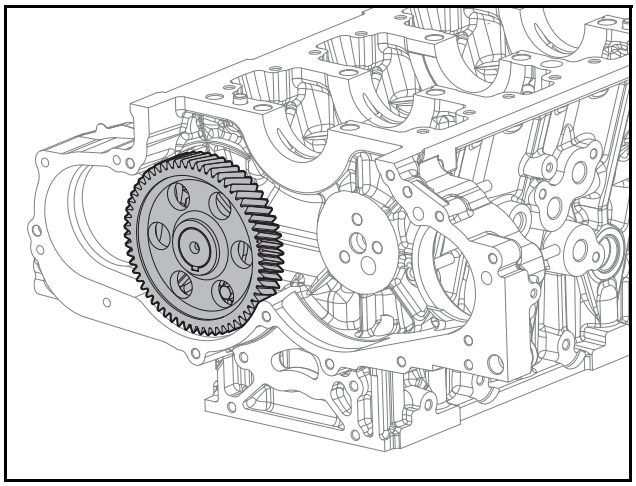

ED1819083

1) Loosen 2 hex bolts.
2) Remove the camshaft.

48. Remove the valve tappets.

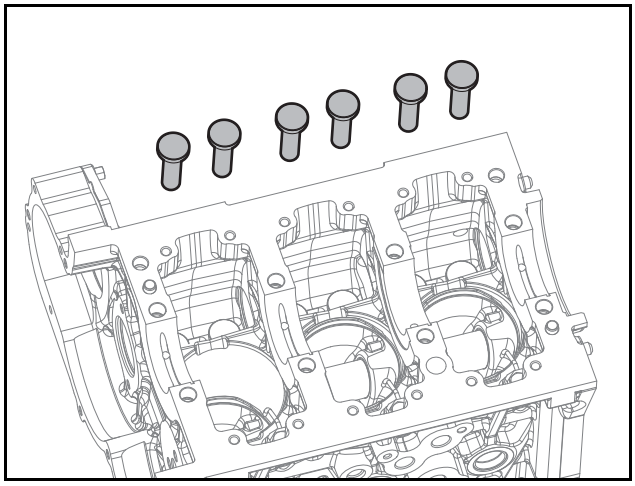

ED1819084

1) Remove 6 valve tappets from the cylinder block.

49. Disconnect the oil spray nozzles.

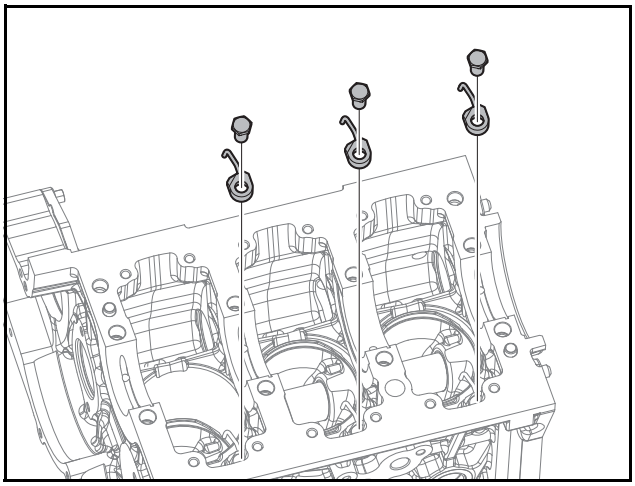

ED1819085

1) Remove 3 relief valves.
2) Remove 3 oil spray nozzles.

Engine assembly

Procedure of Assembling Engine

⚠ CAUTION

- **Cleanse all disassembled and disconnected parts. Especially, clean the oil and coolant path with compressed air and check if there is any resistance.**
- **Arrange general tools and special tools for engine assembly.**
- **Prepare clean engine oil to be applied on each sliding component.**
- **Prepare repair materials such as sealant and gaskets.**
- **Replace used gaskets, seal rings, and expendable parts with new ones.**
- **Each bolt should be tightened with the specified tightening torque in the order of tightening; however, excessive tightening torque should be avoided.**
- **Ensure that all engine parts are successfully operating after reassembly.**
- **Check if any bolts are loose after the first assembly.**
- **Always keep hands clean during assembly.**

Assemble the engine in the following order.

1. Attach the oil spray nozzles.

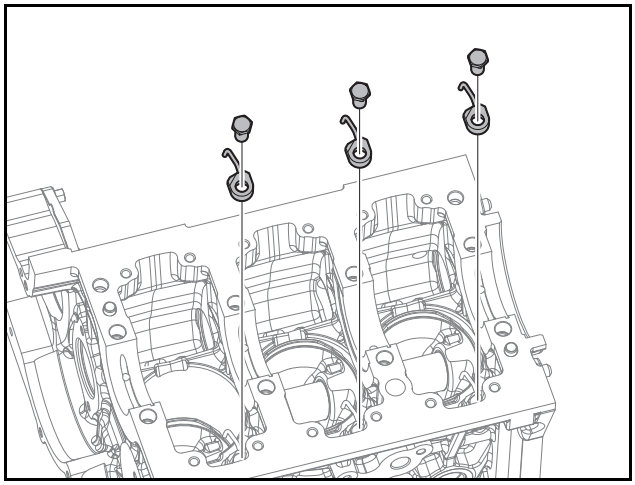

ED1819085

1) Attach 3 oil spray nozzles to the corresponding pins.
2) Mount 3 relief valves at a tightening torque of 2.0 kgf·m.

2. Connect the valve tappets.

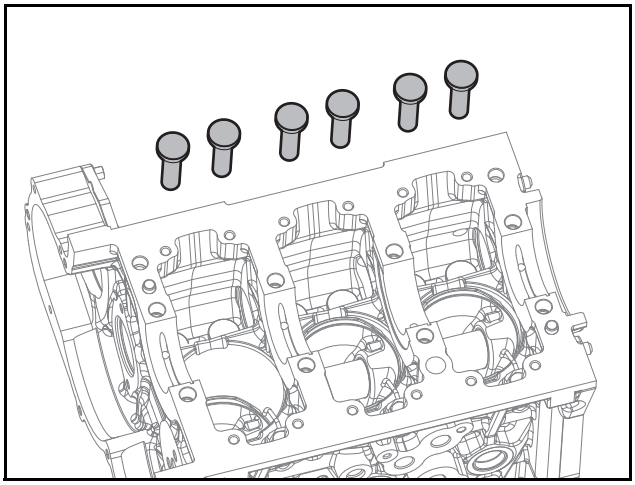

ED1819084

1) Apply engine oil on the surface where the cylinder block and the valve tappets are assembled.
2) Connect 6 valve tappets.
3. Attach the crankshaft.

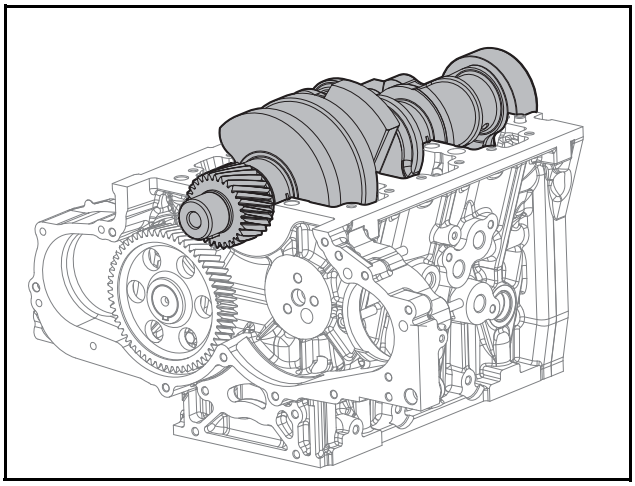

ED1819086

1) Mount 4 top main bearings to the cylinder block.

⚠ CAUTION

- **Bearings with a groove are the top main bearings on the cylinder block side and bearings without a groove are the bottom main bearings on the crank case side.**
- **Remove foreign substances such as residues and sealant (TB1217H) from the inside of the main bearings and the oil seal assembly bore.**
- **Do not apply engine oil on the surface where the cylinder block and the main bearings are assembled.**
- **The class of the main bearing bore inside diameter of the cylinder block is engraved on the cylinder block and the class of main journal diameter of the crankshaft is engraved on the crankshaft. For the engraving positions, see the Engine Unique Number of Chapter 3 (Performance and Specifications).**
- **Select the proper main bearing class by checking or measuring the class of main bearing bore inside diameter of the cylinder block and the class of the main journal diameter of the crankshaft.**
- **The top main bearing class should be same as the bottom main bearing class.**

2) Sufficiently apply engine oil on the surface where the top main bearings and the crankshaft are assembled.
3) Attach the crankshaft.
4) Mount 2 thrust washers.

⚠ CAUTION

Align the key groove of the cylinder block with the key of thrust washer.

Note) The class of the main bearing is as follows.

Inside diameter of the cylinder block main bearing bore	Crankshaft main journal diameter		
	Class A	Class B	Class C
Class A	YELLOW	BLUE	BLUE
Class B	YELLOW	YELLOW	BLUE
Class C	RED	RED	YELLOW

Inside diameter of the cylinder block main bearing bore	Specified Value
Class A	62.000 ~ 62.007 mm
Class B	62.007 ~ 62.014 mm
Class C	62.014 ~ 62.021 mm

Note) For the method to measure the inside diameter of the cylinder block main bearing bore, refer to Chapter 10 Cylinder Block/Head.

Crankshaft main journal diameter	Specified Value
Class A	57.955 ~ 57.960 mm
Class B	57.960 ~ 57.965 mm
Class C	57.965 ~ 57.970 mm

Note) For the method to measure the crankshaft main journal diameter, refer to Chapter 12 Others/Driving Units.

Thickness of Main Bearing	Specified Value
BLUE	1.995 ~ 2.000 mm
YELLOW	2.000 ~ 2.005 mm
RED	2.005 ~ 2.010 mm

4. Attach the camshaft.

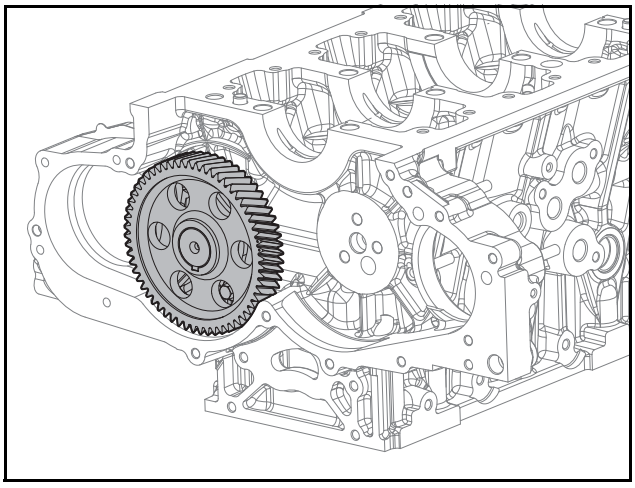

ED1819083

1) Apply engine oil in the cam hole of the cylinder block.
2) Apply engine oil on the camshaft journal.

Note) Ensure that the camshaft journal and the inside of the cylinder block bush are normal.

3) Align the thrust washer with the cylinder block part.
4) Tighten 2 hex bolts at a tightening torque of 2.2 kgf·m.

Note) Temporarily mount one hex bolt manually and then rotate the camshaft gear to tighten the other hex bolt.

5) The camshaft end play is 0.1 ~ 0.2 mm.

Item	Specified Value
Camshaft end play	0.1 to 0.2 mm

5. Assemble the crank case.

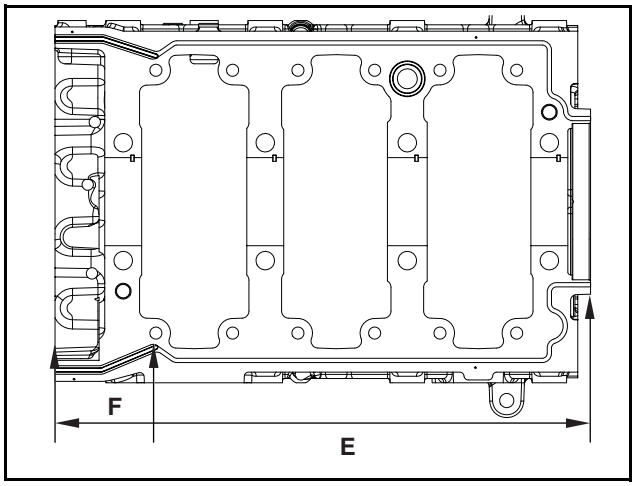

EDL013048A

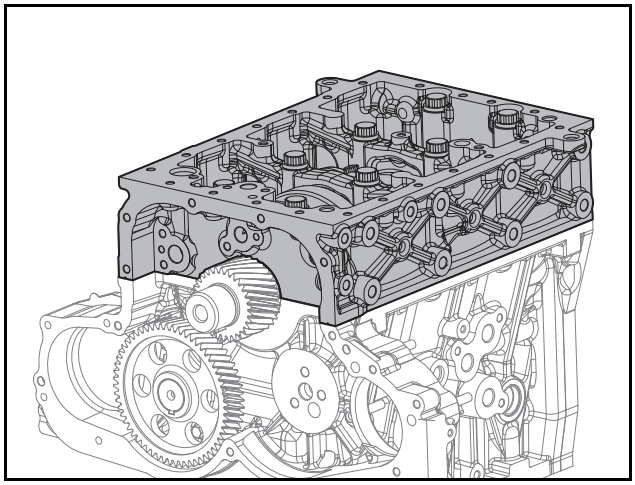

ED1819087

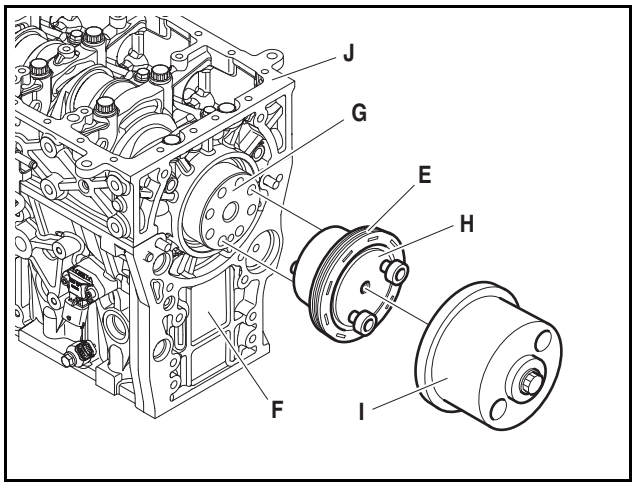

EDL022224A

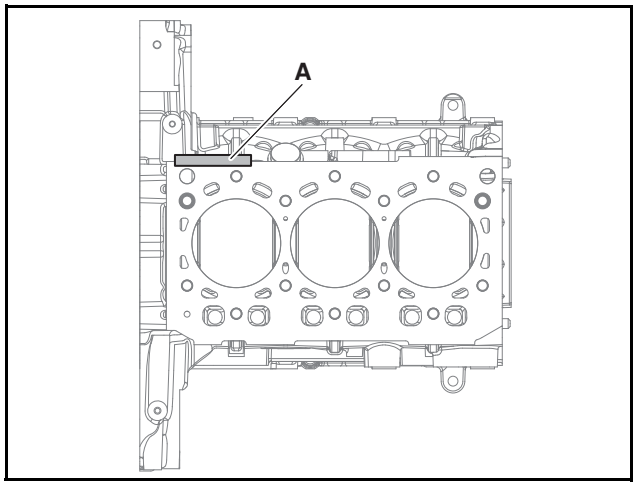

ED18190016

1) Mount 4 bottom main bearings to the crank case.

⚠ CAUTION

- **Bearings with a groove are the top main bearings on the cylinder block side (A) and bearings without a groove are the bottom main bearings on the crank case side.**
- **Do not apply engine oil on the surface where the cylinder block and the main bearings are assembled.**
- **The class of main bearing bore inside diameter of the cylinder block is engraved on the cylinder block and the class of main journal diameter of the crankshaft is engraved on the crankshaft. For the engraving positions, see the Engine Unique Number of Chapter 3 (Performance and Specifications).**
- **Select the proper main bearing class by checking or measuring the class of main bearing bore inside diameter of the cylinder block and the class of main journal diameter of the crankshaft.**
- **The top main bearing class should be same with the bottom main bearing class.**

2) Sufficiently apply engine oil on the surface where the bottom main bearings and the crankshaft are assembled.

3) Apply sealant (TB1217H) on the crank case assembly surface. Apply it on the rear part of the engine (F) with the diameter Ø 6±0.5 mm and on the front part of the engine (E) with the diameter Ø 3 ±0.5 mm.

4) Assemble the crank case.

⚠ CAUTION

- **Be careful to attach the cylinder block and the crank case in the right direction.**
- **Attach parts within five minutes after applying sealant (TB1217H) onto the parts.**
- **Do not start the engine or load pressure within 25 minutes of applying sealant (TB1217H) onto the parts.**

5) Temporarily mount 8 main bearing cap bolts in order.
6) Tighten 8 main bearing cap bolts at a tightening torque of 5.5 kgf·m(±5%) + 90°(±4°) + 90°(±4°) by using the angle method.

⚠ CAUTION

- **Tighten the main bearing cap bolts with the angle method.**
- **Tighten the main bearing cap bolts in order. The front engine direction (F) is the water pump direction and the rear engine direction (R) is the Drive Plate direction.**
- **Attach the crank case by tightening the main bearing cap bolts and then the hex bolts.**

7) Temporarily tighten 12 hex bolts in order.
8) Tighten 12 hex bolts at a tightening torque of 2.2 kgf·m.

⚠ CAUTION

- **Tighten hex bolts in order. The front engine direction (F) is the water pump direction and the rear engine direction (R) is the Drive Plate direction.**
- **Rotate the crankshaft 2 or 3 times to check for defects.**

9) The crankshaft end play is 0.1 ~ 0.31 mm.

Item	Specified Value
Crankshaft end play	0.1 ~ 0.31 mm

10) Mount the rear oil seal assembly jig to the real oil seal (E) of guide (H).
11) Mount the rear oil seal assembly jig guide (H) to the crankshaft (G).
12) Mount the rear oil seal assembly jig holder (I) to the guide (H).
13) Turn the bolt on the center of the rear oil seal assembly jig (I) until the rear oil seal assembly jig holder (I) contacts with the cylinder block surface (F) and the crank case surface (J) and press in the rear oil seal (E).

⚠ CAUTION

- **Be careful in noting the direction of the oil seal assembly and ensuring that the oil seal surface faces the outside of the engine.**
- **Be careful of the depth of the oil seal when attaching it.**
- **Be careful not to damage the oil seal.**
- **Attach the oil seal without applying lubrication, coolant, fuel, sealant (TB1217H), or silicon.**
- **Remove foreign substances such as residues from the oil seal assembly bore.**
- **Do not reuse the oil seal; replace it with a new one.**
- **Be careful not to damage the oil seal when attaching it.**

6. Attach the piston (A).

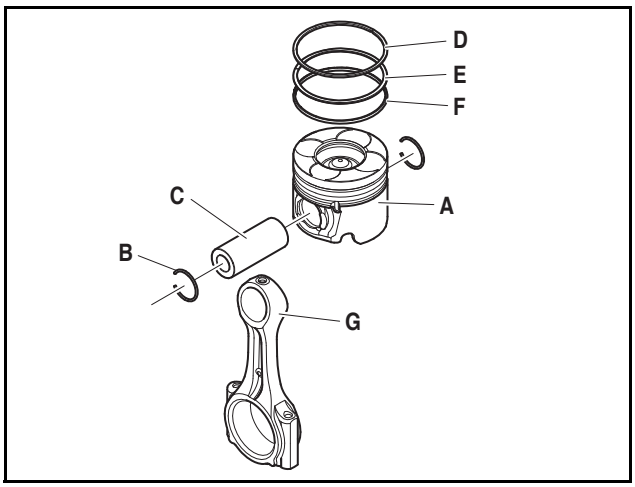

EDL022038A

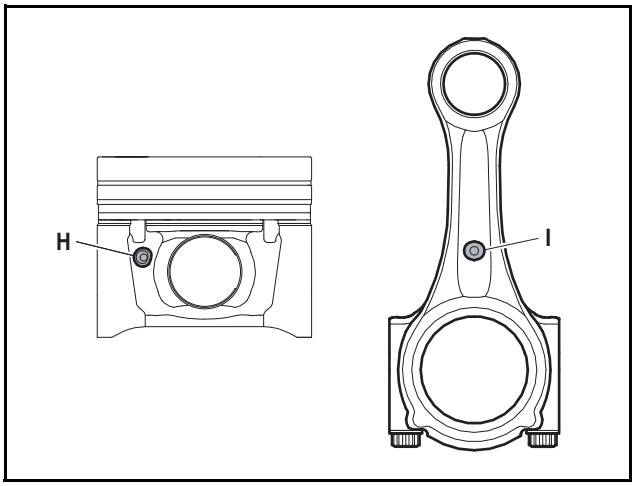

EDL022054A

1) Mount the 1st ring (D), the 2nd ring (E), and the oil ring (F) with the piston ring plier.

⚠ CAUTION

- **Ensure that the 'R' mark of the piston ring faces the top surface of the piston.**
- **Make the piston ring position dislocated to 120 degrees.**

2) Apply engine oil on the piston pin (C).
3) Align the pin hole of the connecting rod small-end with that of the piston (A).

⚠ CAUTION

- **Be careful to mind the direction when attaching the piston and the connecting rod.**
- **Place the product number on the top surface of the piston, the larger side of the valve contact. and the bumpy side of the piston to make them face the front of the cylinder block.**
- **Make the bumpy side of the connecting rod face the front of the cylinder block.**
- **Make the direction of the bumpy side of the piston the same as that of the bumpy side of the connecting rod.**
- **The class of the inside diameter of the cylinder block piston bore is engraved on the cylinder block and the piston class is engraved on the top surface of the piston. For the engraving positions, see the Engine Unique Number of Chapter 3 (Performance and Specifications).**
- **Check or measure the class of the inside diameter of the cylinder block piston bore and the cylinder block piston to select a suitable piston class.**
- **Be careful in noting the direction of the piston and the connecting rod when attaching them.**
- **Make the direction of the bumpy side (H) of the piston the same as that of the bumpy side (I) of the connecting rod.**
- **If the gap between the piston ring and the small end of the connecting rod is out of the range of 0.025 - 0.043, replace the more worn of the two.**

Note) The classes of the cylinder block and the piston are as follows.

Inside Diameter of Cylinder Block Piston Bore	Piston	
	Class A	Class B
Class A	O	-
Class B	-	O

Inside Diameter of Cylinder Block Piston Bore	Specified Value
Class A	89.990 ~ 90.000 mm
Class B	90.000 ~ 90.010 mm

Note) For the method to measure the inside diameter of the cylinder block piston bore, refer to Chapter 10 (Cylinder Block/Head).

Piston	Specified Value
Class A	89.920 ~ 89.930 mm
Class B	89.930 ~ 89.940 mm

Note) The piston class is engraved on the top surface of the piston.

4) Attach the piston pin (C).

⚠ CAUTION

- **Check the attached piston and piston ring. If the piston should be replaced, replace the piston pin along with the piston.**
- **The gap between the piston pin bore and the piston pin should be within the range from 0.008 mm to 0.019 mm.**

5) Mount 2 snap rings (B) on the both ends of the piston.

⚠ CAUTION

- **Do not reuse snap rings.**
- **Assemble snap rings with the opening of the snap rings facing 12 o'clock.**

7. Mount the connecting rods.

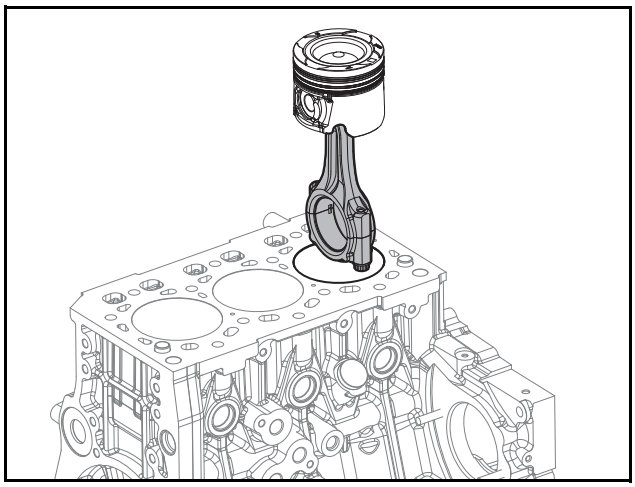

ED18190094

1) Mount the top connecting rod bearings and the bottom connecting rod bearings.

⚠ CAUTION

- **Regardless of the tolerance of the connecting rod or the crankshaft, select the top connecting rod bearings and the bottom connecting rod bearings with the yellow-marked class.**
- **Do not use the top connecting rod bearings and the bottom connecting rod bearings with the blue- or red-marked class when repairing the engine.**
- **Do not apply engine oil to the assembly part of the connecting rods and the bearings.**
- **You can see the oil gap by comparing the connecting rod bearing bore with the crankshaft pin outside diameter.**

Note) The class of the connecting rod bearing is as follows.

Thickness of connecting rod bearing	Specified Value
YELLOW	1.498 ~ 1.502 mm

2) Sufficiently apply engine oil on the inside of the cylinder block bore and the connecting rod bearings.

3) Mount the piston and the connecting rods to the cylinder block with the piston insertion tool.

⚠ CAUTION

- **Be careful to mind the direction when attaching the piston and the connecting rod.**
- **Make the bumpy side of the connecting rod face the front of the cylinder block.**
- **The front engine direction is the water pump direction and the rear engine direction is the Drive Plate direction.**
- **Be careful not to damage the piston and the piston rings.**

4) Attach the connecting rod caps.

⚠ CAUTION

- **Be careful to mind the direction when attaching the connecting rods and the connecting rod caps.**
- **Ensure that the number engraved on the connecting rods is same with that engraved on the connecting rod caps and the assembly direction is same.**

5) Temporarily tighten 6 connecting rod bolts by hand.

⚠ CAUTION

Do not reuse connecting rod bolts; replace them with new ones.

6) Tighten 6 connecting rod bolts at a tightening torque 2.0 kgf·m + 90° by using the angle method.

⚠ CAUTION

After attaching the connecting rods, rotate the crankshaft 2 or 3 times to check whether there is any interference.

8. Attach the idle gear.

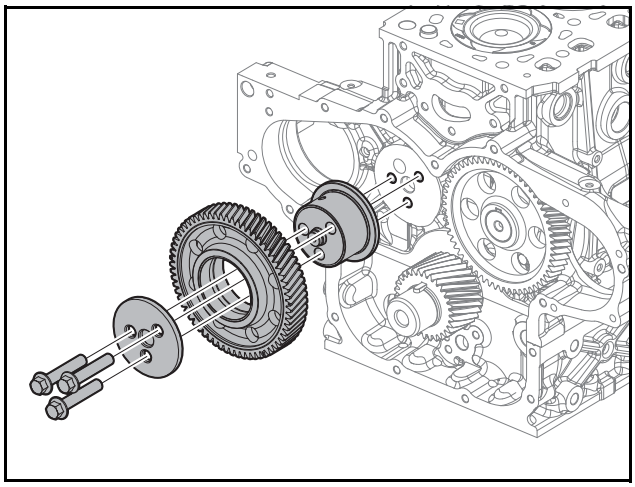

EDM01200076

1) Apply engine oil to the inside of the idle gear bush in the idle gear.
2) Attach the idle gear.

⚠ CAUTION

Make sure that you are attaching the idle gear so that its engraving faces the outside of the cylinder block.

3) Position the idle gear engraving between the camshaft gear engravings.

Note) You can see two camshaft gear engravings and one idle gear engraving.

⚠ CAUTION

Make sure that the idle gear engraving is positioned between the two camshaft gear engravings.

4) Position the crankshaft gear engraving mark between the idle gear engravings.

Note) You can see one crankshaft gear engraving and two idle gear engravings.

⚠ CAUTION

Make sure that the crankshaft gear engraving is positioned between two idle gear engravings.

5) Align the flange hex holes of the cylinder block to those of the idle gear shaft.

6) Attach the idle gear shaft.

⚠ CAUTION

Make the oil hole of the idle gear shaft face the top surface of the cylinder block.

7) Tighten 3 flange hex bolts at a tightening torque of 4.4 kgf·m.
8) Backlash of the idle gear and the crankshaft gear is 0.087 ~ 0.200 mm.

Item	Specified Value
Backlash between the idle gear and the crankshaft gear	0.087 ~ 0.200 mm

9) The backlash between the idle gear and the camshaft gear is 0.087 ~ 0.211 mm.

Item	Specified Value
Backlash between the idle gear and the camshaft gear	0.087 ~ 0.211 mm

9. Connect the oil suction pipe and the oil delivery pipe.

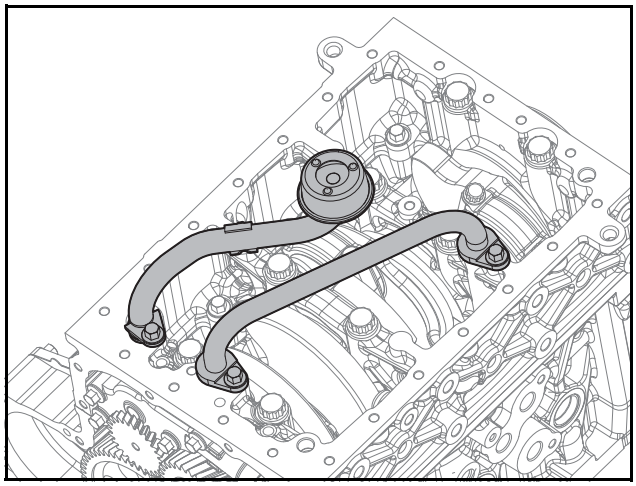

ED1819080

1) Connect the oil delivery pipe and 2 O-rings.
2) Tighten 2 hex bolt at a tightening torque of 2.2 kgf·m.
3) Connect the oil suction pipe and 1 O-ring.
4) Tighten 2 hex bolts at a tightening torque of 2.2 kgf·m.

⚠ CAUTION

- **Ensure that the O-rings of the inlet and the outlet have been mounted.**
- **Be careful not to damage the O-rings while mounting them.**

10. Attach the oil pump.

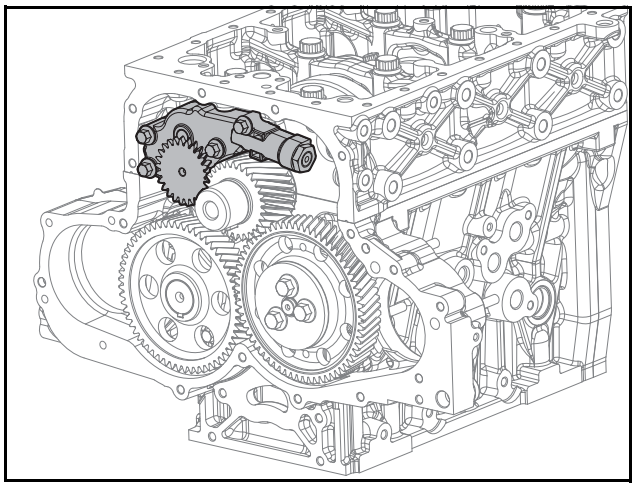

ED1819081

1) Align 2 O-rings to the engine oil inlet and outlet.
2) Align the oil pump with the pin and press it to the cylinder block as much as possible.
3) Tighten 4 hex bolts at a tightening torque of 2.2 kgf·m.
4) The backlash between the crankshaft gear and the oil pump gear is 0.060 ~ 0.259 mm.

Item	Specified Value
Backlash between the crankshaft gear and the oil pump gear	0.060 ~ 0.259 mm

⚠ CAUTION

- **Make sure that the O-rings have been mounted.**
- **Be careful not to damage the O-rings while mounting them.**

11. Attach the oil pan.

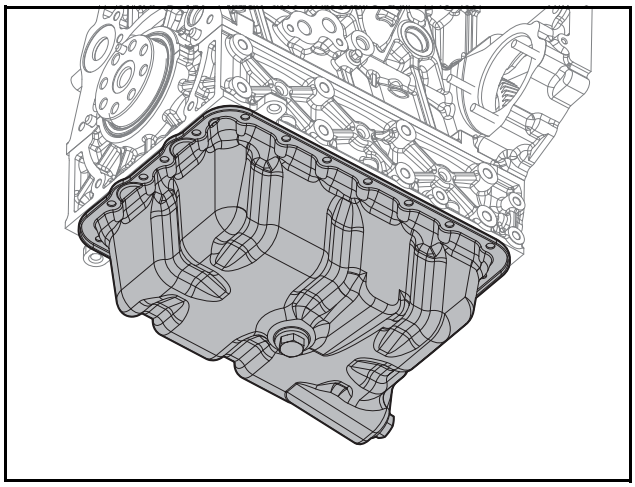

ED1819079

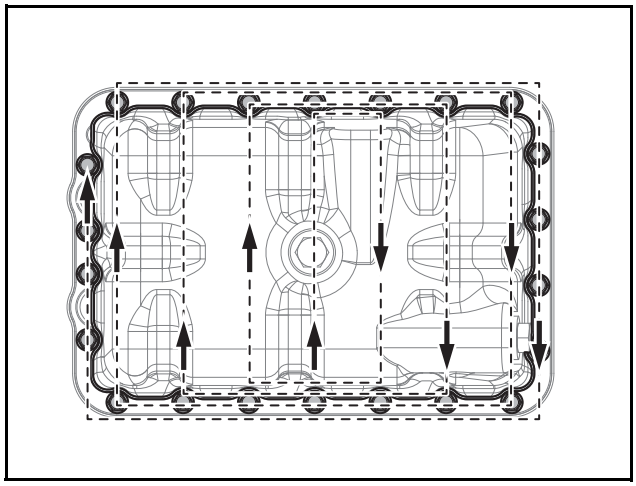

EDM01200127

1) Apply sealant (TB1217H) to the oil pan assembly surface with the diameter of Ø3 ±0.5 mm.

⚠ CAUTION

- **Be careful that the oil pan has been attached in the right direction.**
- **Attach parts within five minutes after applying sealant (TB1217H) onto the parts.**
- **Do not start the engine or load pressure for 25 minutes after applying sealant (TB1217H) onto the parts.**

2) Attach the oil pan.
3) Tighten 22 flange hex bolts at a tightening torque of 2.2 kgf·m.

⚠ CAUTION

Tighten flange hex bolts in the order. The front engine direction is the water pump direction and the rear engine direction is the Drive Plate direction.

4) Mount the O-ring.
5) Connect the drain plug at a tightening torque of 3 kgf·m.

12. Assemble the PTO (Power Take Off) cover & gasket.

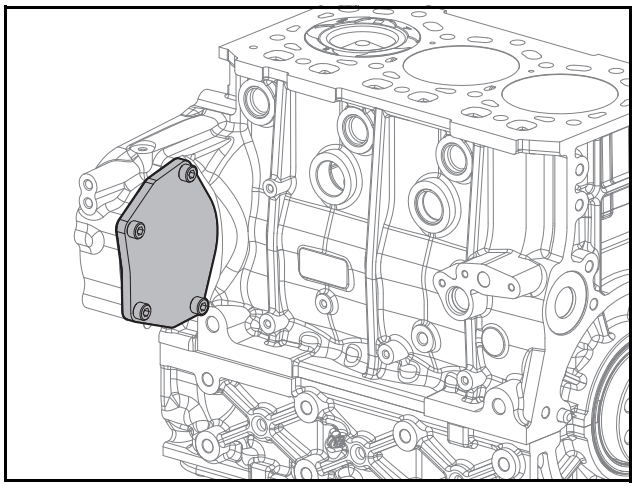

EDM01200075

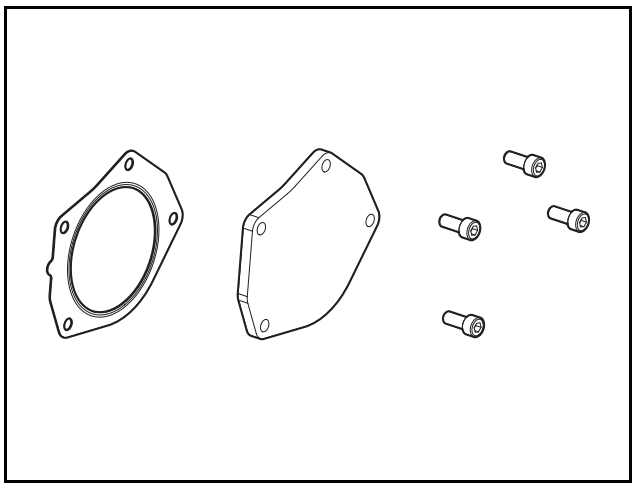

EDM03190319

1) Assemble the PTO (Power Take Off) cover & gasket.
2) Tighten 4 inner socket bolts to a tightening torque of 2.2 ±0.2 kgf·m.

13. Attach the fuel injection pump.

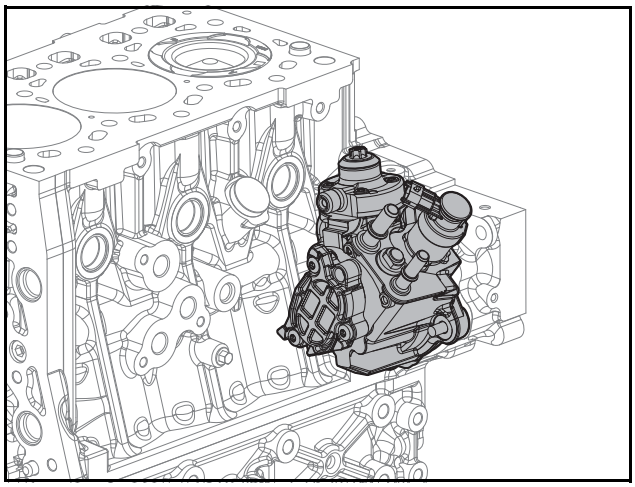

ED1819078

1) Mount the O-ring to the collar.
2) Mount the collar.

⚠ CAUTION

- **Ensure that you are attaching the injection pump drive gear so that its engraving faces the outside of the cylinder block.**
- **Ensure that the pin direction is the opposite direction of the idle gear.**

3) Tighten the flange hex nuts at a tightening torque of 8.2 ±0.5 kgf·m.
4) Attach the fuel injection pump.
5) Position the idle gear engraving between the injection pump drive gear engravings.

Note) You can see two injection pump drive gear engravings and one idle gear engraving.

⚠ CAUTION

- **Ensure that the idle gear engraving is positioned between the two injection pump drive gear engravings.**
- **Align the injection pump drive gear engravings, the idle gear engraving, and the pin of the fuel injection pump shaft before attaching them.**

6) The backlash between the fuel injection pump and the idle gear is 0.087 ~ 0.200 mm.

Item	Specified Value
Backlash between the fuel injection pump and the idle gear	0.087 ~ 0.200 mm

7) Tighten 3 flange hex nuts at a tightening torque of 2.2 kgf·m.

14. Attach the timing wheel.

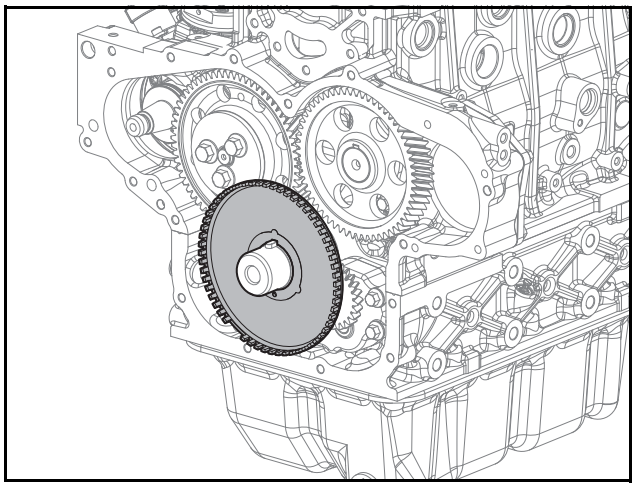

ED1819077

1) Align the timing wheel to the pin and attach it to the crankshaft gear surface.

⚠ CAUTION

Be careful not to damage the teeth of the timing wheel.

15. Attach the timing gear case.

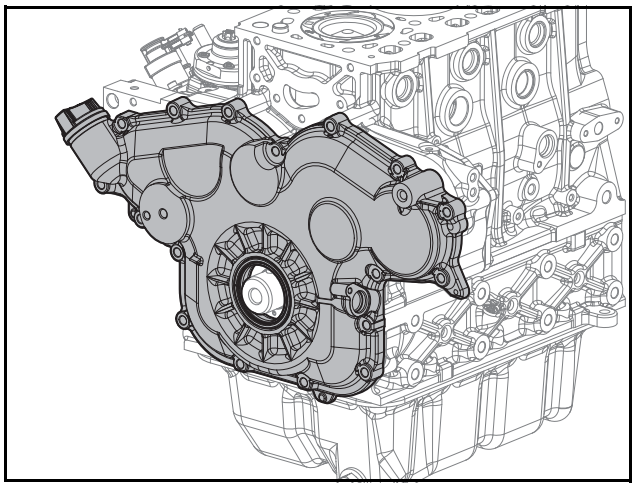

ED1819076

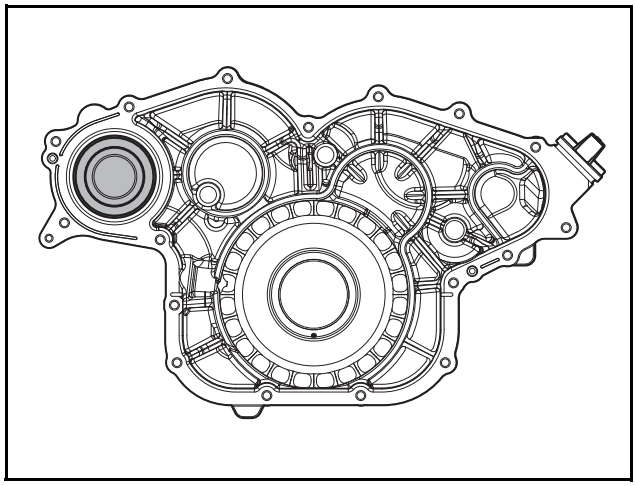

EDM02200047

Note) Apply as follows and use TB1217H equivalent product.

Note) Apply to the surface of TGC cover with ø2.5 ±0.5 mm thickness.

Note) The PTO bearing is included in the timing gear case. Hence, in the event of a bearing defect, replace the entire TGCC (Timing Gear Case Cover) assembly.

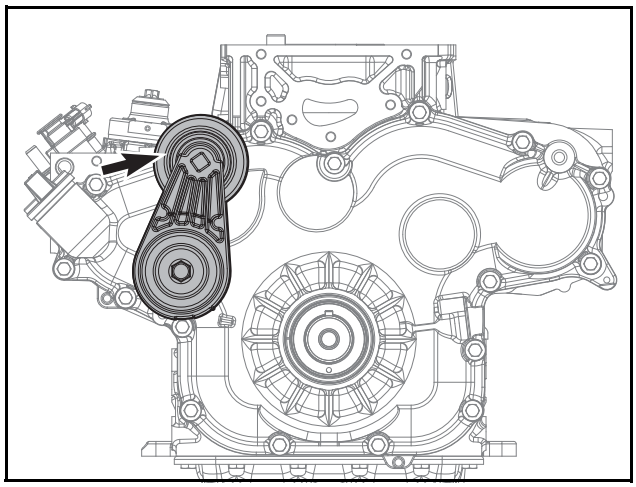

ED24190138

1) Make the assembly surface of the timing gear case face the ground.
2) Mount the front oil seal to the front oil seal assembly jig.
3) Align the front oil seal assembly jig where the front oil seal is mounted to the timing gear case and beat it with a rubber hammer.

4) when the front oil seal is inserted to the timing gear case, pull off the front oil seal assembly jig.

⚠ CAUTION

- **Be careful in noting the direction of the oil seal assembly and ensuring that the oil seal surface fasces the outside of the engine.**
- **Be careful of the depth of the oil seal when attaching it.**
- **Be careful not to damage the oil seal.**
- **Attach the oil seal without applying lubrication. coolant, fuel, sealant (TB1217H), or silicon.**
- **Remove foreign substances such as residues from the oil seal assembly bore.**
- **Do not reuse the oil seal; replace it with a new one.**
- **Be careful not to damage the oil seal when attaching it.**

5) Remove the foreign substances on the timing gear case assembly surface and clean it with a dry cloth.
6) Apply sealant (TB1217H) to the timing gear case assembly surface with the diameter of Ø2.5 ±0.5 mm.

⚠ CAUTION

- **Be careful that the timing gear case has been attached in the right direction.**
- **Attach parts within five minutes of applying sealant (TB1217H) onto the parts.**
- **Do not start the engine or load pressure for 25 minutes after applying sealant (TB1217H) onto the parts**

7) Align the timing gear case with the pin and attach it.
8) Tighten 16 hex bolts at a tightening torque of 2.2 kgf·m.
9) Mount the crank speed sensor and then tighten the fixing bolt.

16. Attach the crankshaft pulley.

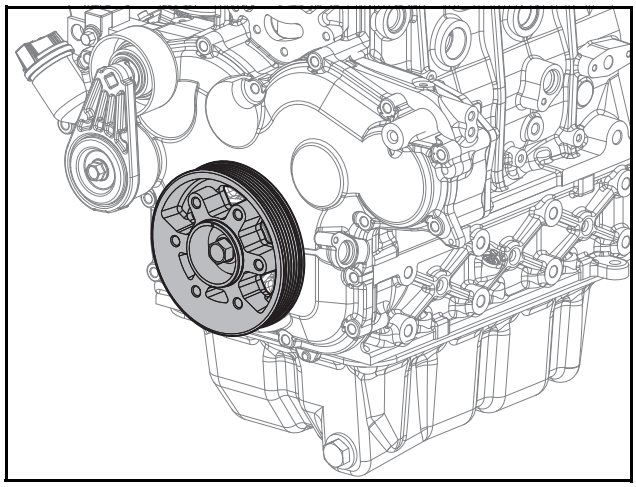

ED1819074

1) Align the crankshaft pulley to the pin and attach it.
2) Tighten flange hex bolts at a tightening torque of 26 kgf·m.

⚠ CAUTION

- **Be careful not to damage the oil seal.**
- **Fix the crankshaft to allow the flange hex bolts to be tightened with the specified torque.**

17. Attach the valves.

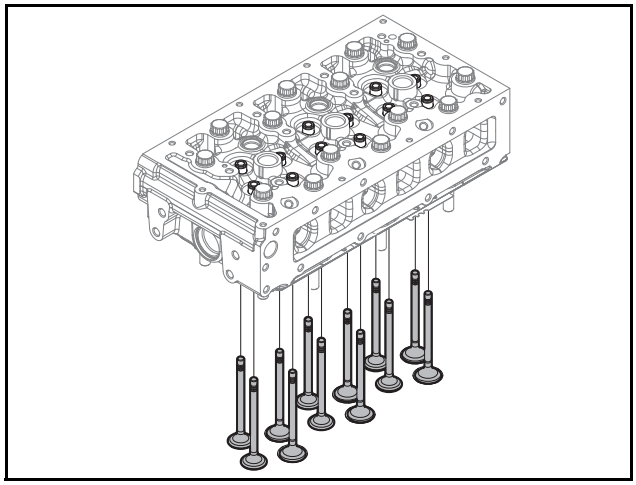

ED1819073

1) Align the valve stem seal jig to the valve stem seal and beat it with a rubber hammer to press it in.

⚠ CAUTION

Do not give an excessive shock on the valve stem seals; otherwise, they may be damaged.

2) Apply engine oil on the surface where the valves and the valve stem seals are assembled.

3) Attach the valves.

⚠ CAUTION

- **Be careful to use the right valve without confusing the intake valve with the exhaust valve.**
- **The intake valve has the larger valve head diameter and the exhaust valve has the smaller one.**

18. Attach the valve springs.

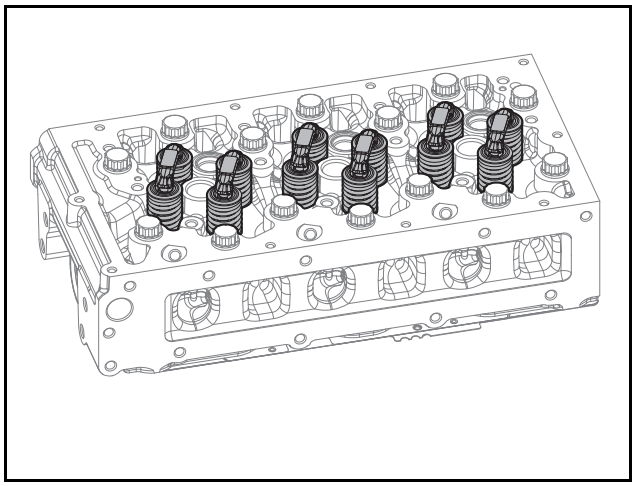

ED1819072

1) Attach the valve springs.
2) Mount the valve spring retainers.
3) Compress the valve with the valve spring compression tool.
4) Mount the valve cotters.
5) Mount the calipers.

⚠ CAUTION

Check if the valve cotters have been positioned correctly with the plastic hammer after completing attaching them.

19. Attach the cylinder head.

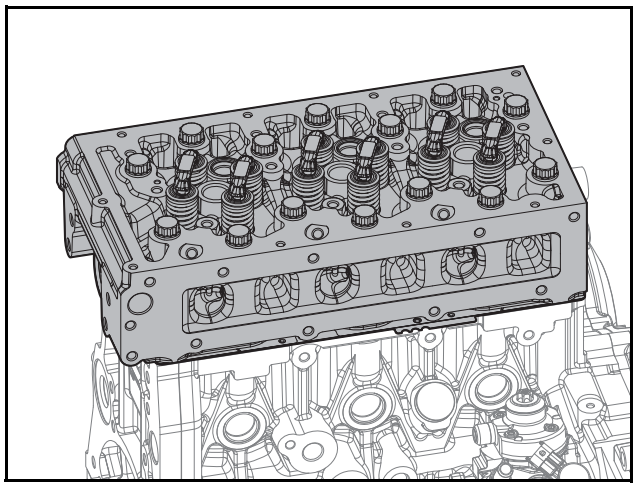

ED1819071

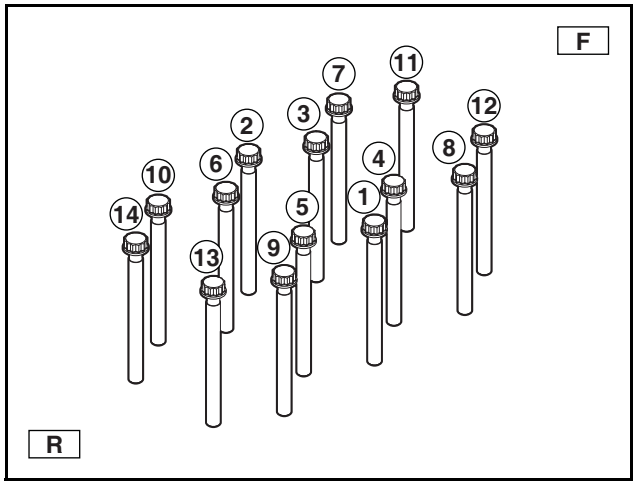

EDM01230056

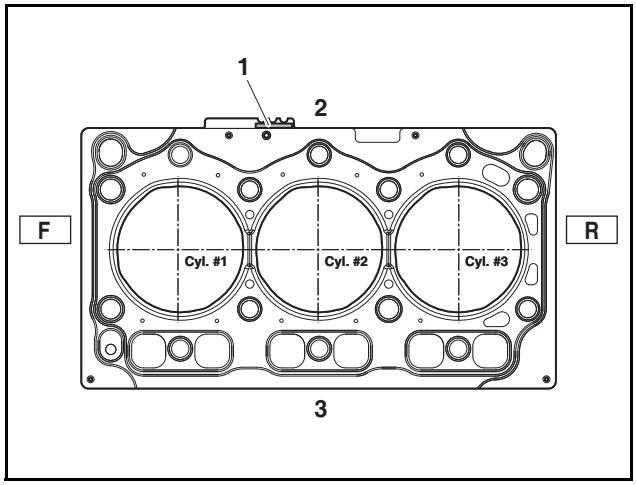

ED18190021

1. Identification mark of the cylinder head gasket
2. Intake manifold side
3. Exhaust manifold side

1) Align the cylinder head gasket with the pin and mount it.

⚠ CAUTION

- **Measure the step height of the piston top side and select the cylinder head gasket with the suitable class. For methods to measure the step height of the piston top side, refer to Measurement of the step height of the piston top side in Chapter 12 (Others/Driving Units).**
- **Be careful to mind the direction when assembling the cylinder head gasket.**
- **Attach the cylinder head so that its identification mark and class mark face upward.**
- **Align the push rod hole, the cylinder head bolt hole, and the cylinder head gasket hole and attach the cylinder head.**
- **Do not reuse the cylinder head gasket but replace with new one.**
- **Class A has one semi-circle of the identification mark on the cylinder head gasket, Class B has two semi-circles and Class C has three semi-circles.**

Note) The class of the cylinder head gasket is as follows.

Head gasket grade			Piston protrusion Specification 0.50 ±0.16 mm	
Symbol	Hole	Thickness	Over	To
Mark	EA	mm	mm	mm
A	1	1.02	0.34	0.45
B	2	1.12	0.45	0.55
C	3	1.22	0.55	0.66

Note) For method to measure the step height of the piston top side, refer to Measurement of the step height of the piston top side in Chapter 12 (Others/Driving Units).

2) Attach the cylinder head.
3) Temporarily tighten 14 cylinder head bolts in the order.
4) Tighten 14 cylinder head bolts at a tightening torque 4.0 kgf·m + 90°+ 90°+ 90° with the angle method.

⚠ CAUTION

- **Tighten cylinder head bolts in order.**
- **The front engine direction is the water pump direction and the rear engine direction is the Drive Plate direction.**
- **Do not reuse cylinder head bolts.**
- **Do not apply engine oil to the cylinder head bolts.**

20. Connect the push rods.

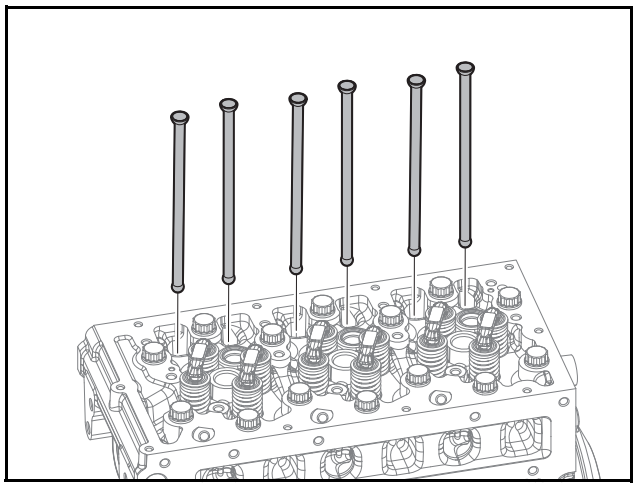

ED1819070

1) Apply engine oil on both ends of the push rods.
2) Connect the push rods in the cylinder head holes.
3) Hit the head of the push rods with a rubber hammer lightly once or twice to get them positioned in the tappet holes.

⚠ CAUTION

After connecting the push rods, rotate them to check the connection state.

21. Attach the rocker arm.

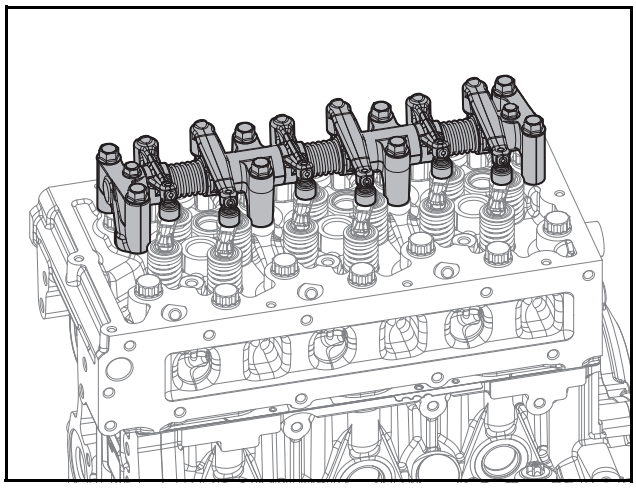

ED18190069

1) Attach the rocker arm.
2) Tighten 8 flange hex bolts at a tightening torque of 2.2 ±0.22 kgf·m.

22. Attach the cylinder head cover.

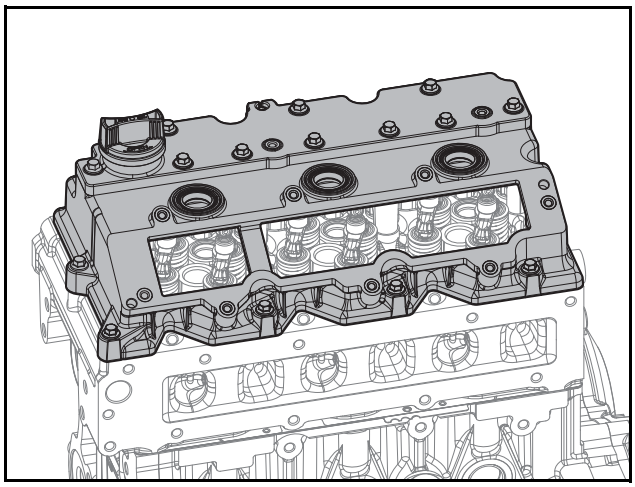

ED18190068

1) Attach the cylinder head cover.
2) Temporarily tighten 10 hex bolts.
3) Tighten 10 hex bolts at a tightening torque of 1 ±0.1 kgf·m.

⚠ CAUTION

- **Be careful not to allow the seal ring of the cylinder head cover to get out to the outside.**
- **Tighten the hex bolts of the cylinder head cover in the order. The front engine direction is the water pump direction and the rear engine direction is the Drive Plate direction.**

4) Mount the oil injection cap.

23. Connect the glow plugs.

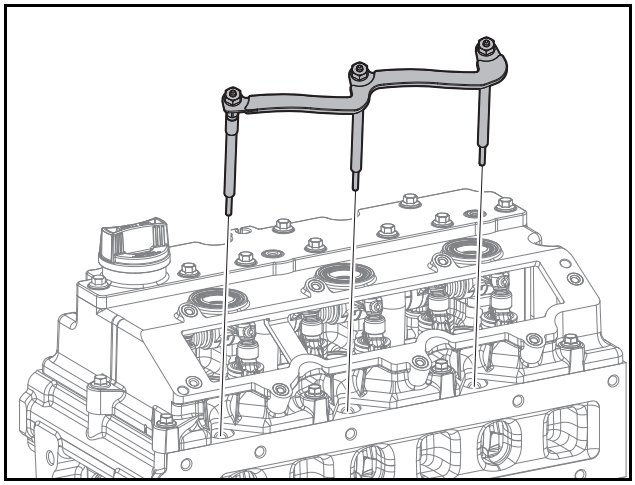

ED18190067

1) Tightening 3 glow plugs to the cylinder head at a tightening torque of 9 ~ 12 N·m.
2) Attach the electric connector.
3) Mount 3 washers.
4) Tighten 3 hex nuts at a tightening torque of 1.3 ~ 2 N·m.

24. Attach the injectors.

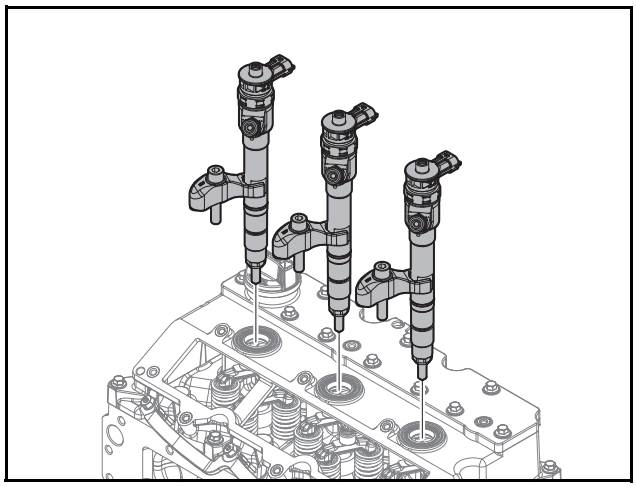

ED18190066

1) Align the injector seal ring washer with the center of the injector hole and mount it.
2) Sufficiently apply engine oil on the cylinder head cover surface where the injectors contact.
3) Attach 3 injectors.

⚠ CAUTION

- **Do not reuse the head cover rubber seal and the injector oil seal but replace with new ones.**
- **Attach injectors by slowly turning them to prevent damage to the cylinder head cover surface which contacts the injectors.**
- **Do not reuse the injector seal ring washers. Otherwise, critical damage to the engine may occur because of unstable combustion.**

4) Mount 3 injector fixtures.
5) Temporarily tighten 3 hex bolts.

⚠ CAUTION

Do not tighten the hex bolts by force when it is difficult to tighten them temporarily. Forced tightening may cause damage to the cylinder head.

6) Tighten 3 hex bolts at a tightening torque of 4.35 ±0.35 kgf·m.

25. Attach the right cylinder head cover.

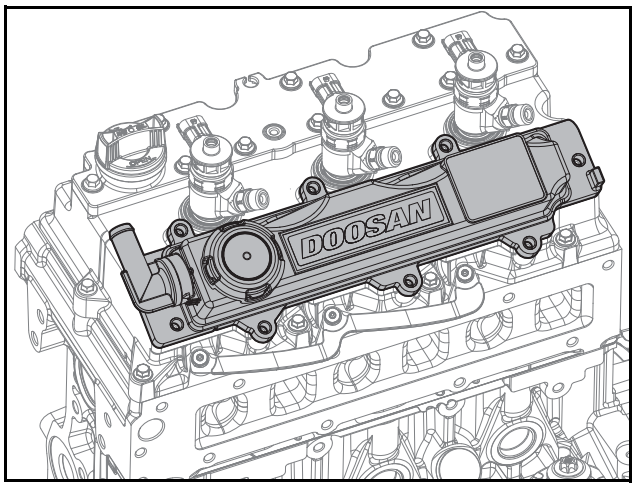

ED18190065

1) Align the right cylinder head cover with the assembly pin hole and attach it.
2) Temporarily tighten 8 flange hex bolts in the order.
3) Tighten 8 flange hex bolts at a tightening torque of 1 ±0.1 kgf·m.

26. Attach the intake manifold.

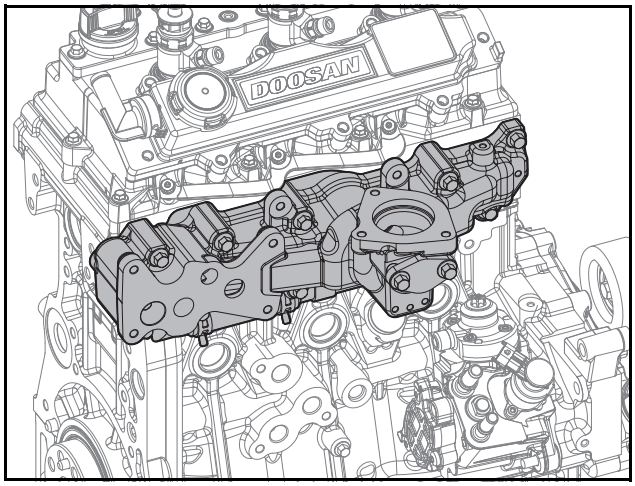

ED18190064

1) Mount the intake manifold and the gasket.

⚠ CAUTION

- **Be careful to note the direction when mounting the gasket.**
- **Be careful not to damage the gasket while mounting it.**

2) Tighten 11 flange hex bolts and 2 flange hex bolts at a tightening torque of 2.2 kgf·m.
3) Attach EGR mixer and gasket to the intake manifold.
4) Tighten 2 flange hex bolts at a tightening torque 2.2 kgf·m.

27. Attach the oil cooler and the oil filter module.

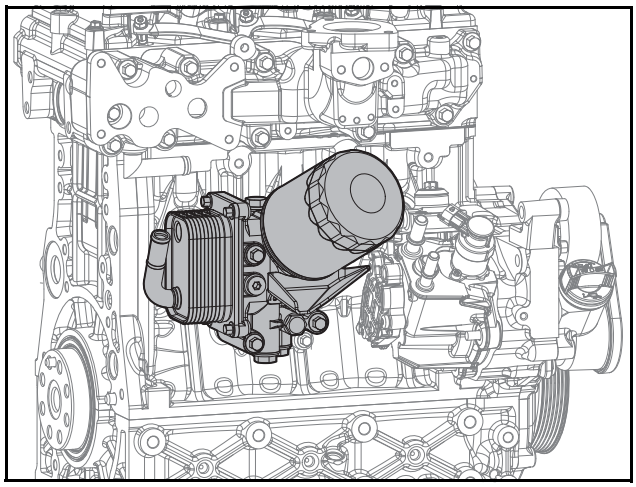

ED18190063

1) Mount the oil cooler and 3 O-rings to the oil filter module.
2) Tighten 3 flange hex bolts.
3) Mount the oil filter module and 3 O-rings to the cylinder block.

⚠ CAUTION

- **Make sure that the O-rings have been mounted.**
- **Be careful not to damage the O-rings while mounting them.**

4) Tighten 3 flange hex bolts at a tightening torque of 2.2 kgf·m.
5) Wipe the surface on which the oil filter is mounted clean.
6) Thinly spread engine oil over the rubber packing of the new oil filter.
7) Temporarily mount the oil filter by turning it by hand.
8) Mount the oil filter with the filter wrench at a tightening torque of 16 ~ 20 N·m.

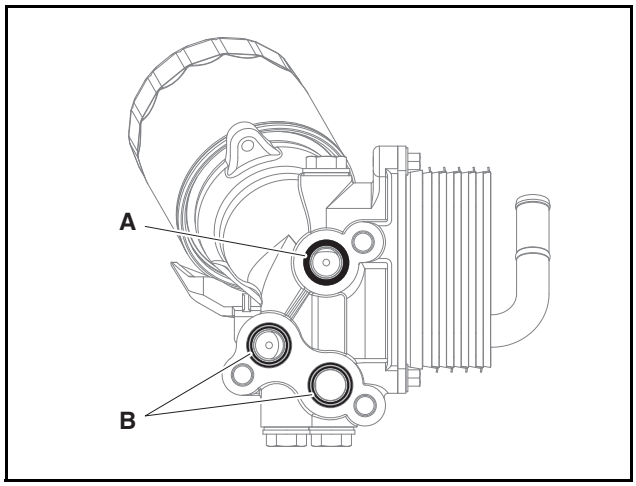

EDM02200226

⚠ CAUTION

Check the 1 O-ring at A (black) on the top of the oil filter and the 2 O-rings at B (yellow) on the bottom.

28. Attach the EGR valve.

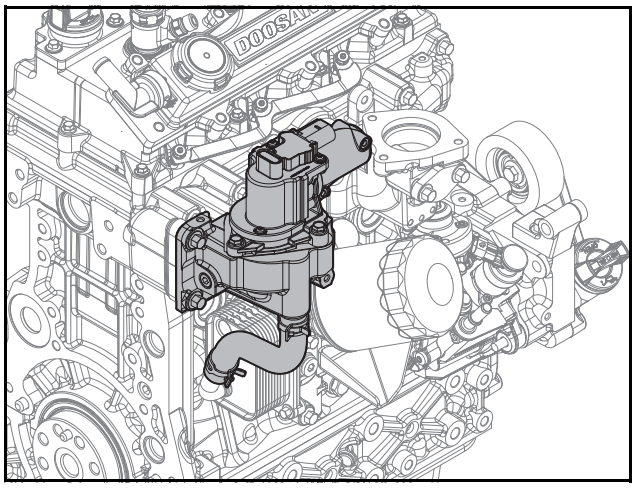

ED18190062

1) Attach the EGR valve and gasket to the intake manifold.

⚠ CAUTION

- **The EGR valve has to be handled with care, because it is sensitive to external impact.**

2) Tighten 4 flange hex bolts at a tightening torque 2.2 kgf·m.
3) Assemble hose and clamps.

29. Attach the common rail.

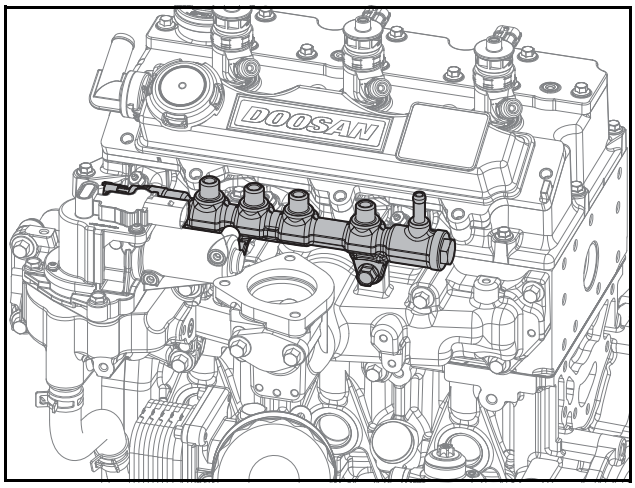

ED18190061

1) Attach the common rail to the intake manifold.

⚠ CAUTION

- **Be careful to note the direction when attaching the common rail.**
- **Be careful not to damage the common rail while attaching it.**

2) Temporarily tighten 2 hex bolts by hand.
3) Tighten 2 hex bolts at a tightening torque of 2.2 kgf·m.

30. Connect the fuel injection pipes.

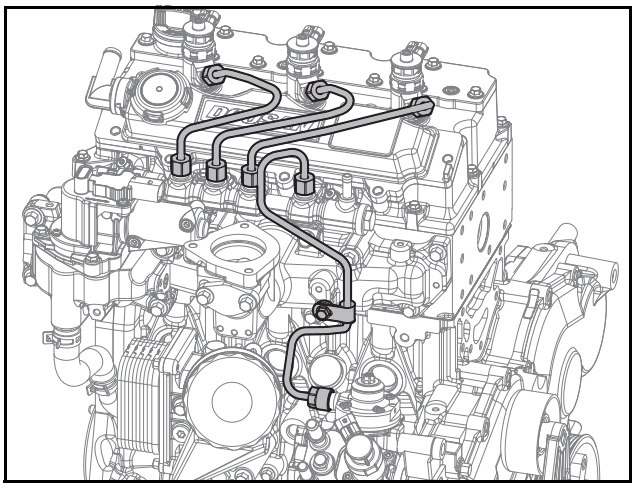

ED18190060

1) Loosen 2 hex bolts of the common rail.
2) Temporarily connect the fuel injection pipes by hand.

⚠ CAUTION

- **Do not bend the fuel injection pipes by force.**
- **Be careful to note the direction when connecting the fuel injection pipes.**
- **Assemble the nut on one side of the fuel injection pipe first, and then the nut on the other side to connect the round part of the pipe to the correspondent part correctly.**
- **Do not reuse fuel injection pipes and clamp; replace them with new ones. Reusing fuel injection pipes and clamp may allow foreign substances into the fuel pipes or oil leaks from the bolt clamping to occur, causing a critical fault in engine performance.**

3) Tighten 2 hex bolts of the common rail at a tightening torque of 2.2 kgf·m.
4) Tighten the nuts of the fuel injection pipe, which are connected to the common rail and the injector, at a tightening torque of 3.0 kgf·m.

5) Tighten the nuts of the fuel injection pipe, which are connected to the common rail and the fuel injection pump, at a tightening torque of 3.0 kgf·m.

31. Connect the fuel return hose.

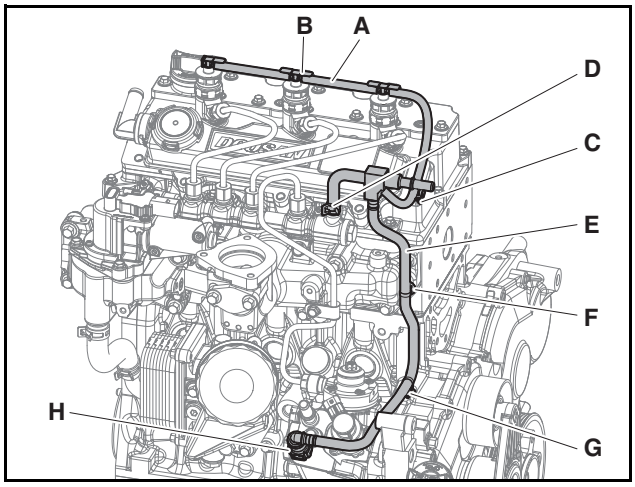

ED18190059

1) Press the fuel return hose into the end of the nipple and connect it.

⚠ CAUTION

- **Be careful to note the direction when connecting the fuel return hose.**
- **The injector should be fully connected with the hose.**
- **Be careful to avoid damage for fuel return hose of injector.**
- **Don't press on the fuel hose, don't drop heavy tool like as spanner on engine, don't step on fuel hose, don't stand on engine.**
- **If the fuel hose are broken by wrong handling, it is possible fire.**

2) Mount 4 hose clips.
3) Mount the hose clips.

⚠ CAUTION

Fix the handle of hose clip to face the front of the engine.

4) Tighten the flange hex bolts.
5) Mount the fixing clips.

32. Mount the rear and front lifting hooks.

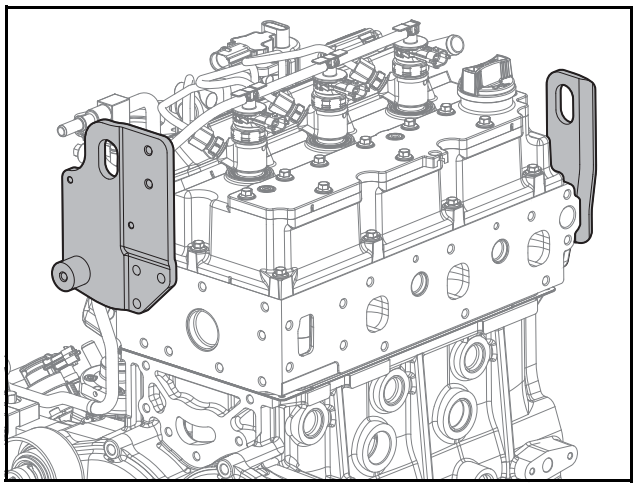

ED18190058

1) Mount the rear lifting hook.
2) Tighten 2 flange hex bolts at a tightening torque of 4.4 kgf·m.
3) Mount the front lifting hook.
4) Tighter 3 flange hex bolt at a tightening torque of 2.2 kgf·m.

33. Attach the water pump.

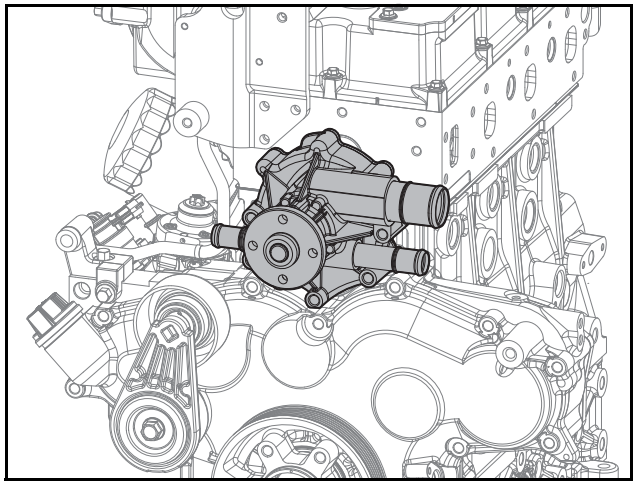

ED18190057

1) Align the gasket with the stud bolts and mount it.
2) Align the coolant pump with the stud bolts and attach it.
3) Tighten 4 hex bolts and 2 flange hex nuts at a tightening torque of 2.2 kgf·m.

⚠ CAUTION

- **Do not allow the gasket to protrude from or be to one side of the coolant pump.**
- **Be careful not to damage the gasket while mounting it.**

34. Attach the water pump pulley.

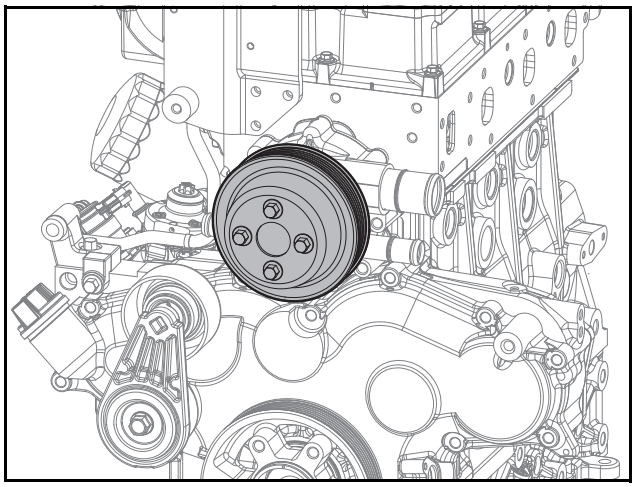

ED18190056

1) Attach the water pump pulley.
2) Tighten 4 hex bolts at a tightening torque of 2.2 kgf·m.

35. Attach the heat screen.

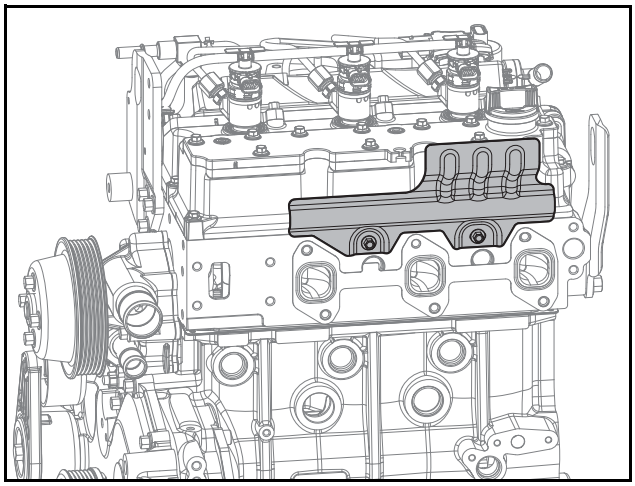

ED18190088

1) Mount the heat screen.
2) Tighten 2 flange hex bolts at a tightening torque 1.25 ±0.1 kgf·m.

⚠ CAUTION

- **Be careful to note the direction in which the gasket is mounted. Mount the gasket so that the TOP mark faces the front of the engine.**
- **Be careful not to damage the gasket while mounting it.**

36. Attach the exhaust manifold.

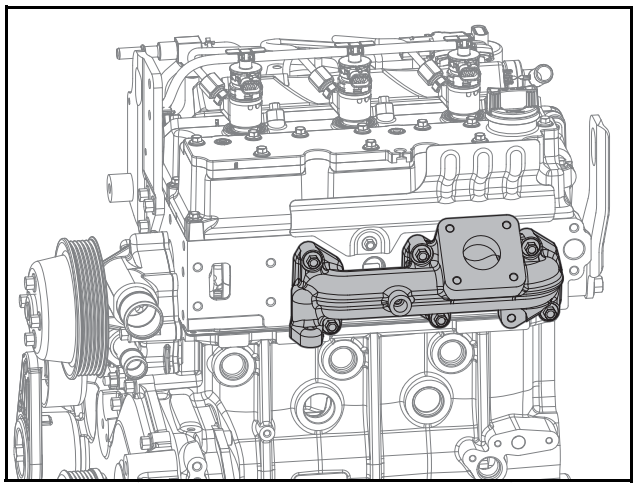

ED18190055

1) Mount the gasket so that the TOP mark faces the top surface and the front of the engine.
2) Attach the exhaust manifold.
3) Apply torque as follow below sequence.
   - Tightening torque: 3.4 ±0.3 kgf·m.
4) Apply check torque as follow below sequence again.
   - Tightening torque: 3.4 ±0.3 kgf·m.

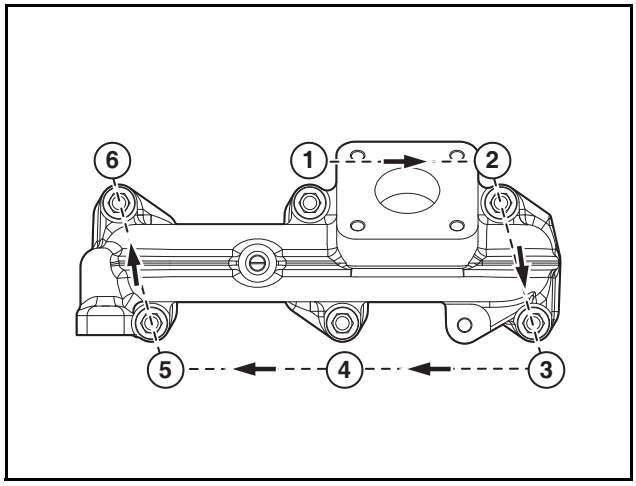

EDM01200172

37. Mount the thermostat.

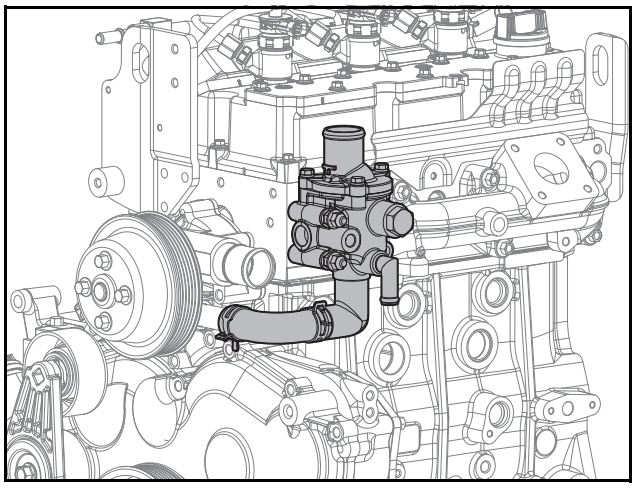

ED18190054

1) Mount the thermostat to the cylinder head.
2) Tighten 2 flange hex bolt, 2 space bolt and 2 flange hex nut as a tightening.
3) Tighten 3 flange hex bolts at a tightening torque of 2.2 kgf·m.
4) Connect the rubber hose.
5) Mount the hose clamps.

⚠ CAUTION

- **After mounting the hose clamps, make the protrusion face the cylinder head side to prevent interference between the protrusion and the coolant pump pulley.**
- **Do not use the hose clamps more than twice; replace them with new ones.**

38. Attach the EGR cooler.

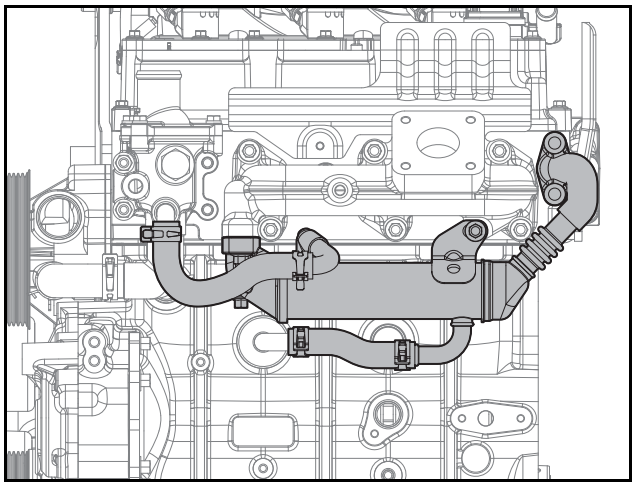

ED18190053

⚠ CAUTION

- **Be careful to note the direction when mounting the EGR cooler.**
- **Be careful not to damage the gasket while mounting it.**

1) Mount the EGR cooler and gaskets to the exhaust manifold and cylinder head.
2) Tighten 3 flange hex bolts at a tightening torque of 3.1 kgf·m. (exhaust manifold side)
3) Tighten 2 flange hex bolts at a tightening torque of 2.2 kgf·m. (cylinder head side)
4) Assemble 2 hoses and clamps.

⚠ CAUTION

Do not reuse the clamps if it has permanent deformation by irregular shape.

39. Assemble the turbocharger.

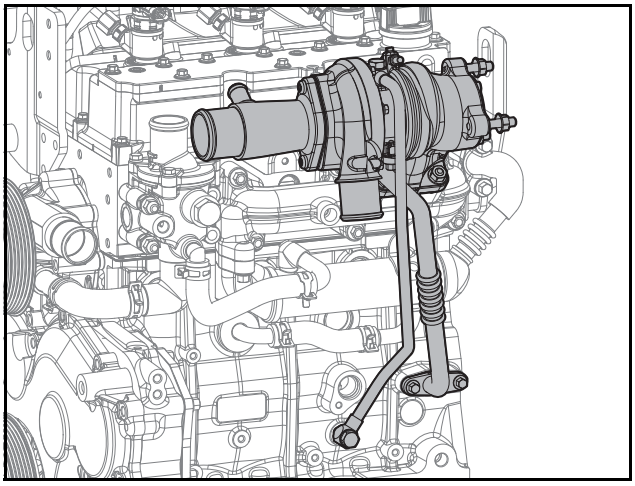

ED18190052

1) Connect the oil return pipe and gasket to the turbocharger.
2) Tighten 2 flange hex bolts at a tightening torque of 1.25 ±0.12 kgf·m.
3) Mount the turbocharger and the gasket to the exhaust manifold.

⚠ CAUTION

- **Be careful to note the direction when mounting the gasket.**
- **Be careful not to damage the gasket while mounting it.**
- **Do not reuse gaskets; replace them with new ones.**

4) Tighten 4 flange hex nuts at a tightening torque of 2.2 kgf·m.
5) Assemble the gasket between oil return pipe and cylinder block. Tighten 2 flange hex nuts at a tightening torque of 1.0 kgf·m.

⚠ CAUTION

Do not reuse the clamp if it has permanent deformation by irregular shape.

6) Temporary tighten 2 hollow screws to the oil delivery pipe manually.
7) Tighten 2 hollow screws at a tightening torque of 1.9 kgf·m.

⚠ CAUTION

- **Do not reuse the oil supply pipe.**
- **Tighten the hollow screw at the cylinder block side first, and then tighten the other at the turbocharger side.**

Note) During assembly, add 3 cc of clean oil to the turbocharger oil inlet.

40. Mount the oil level gauge and the coolant hose.

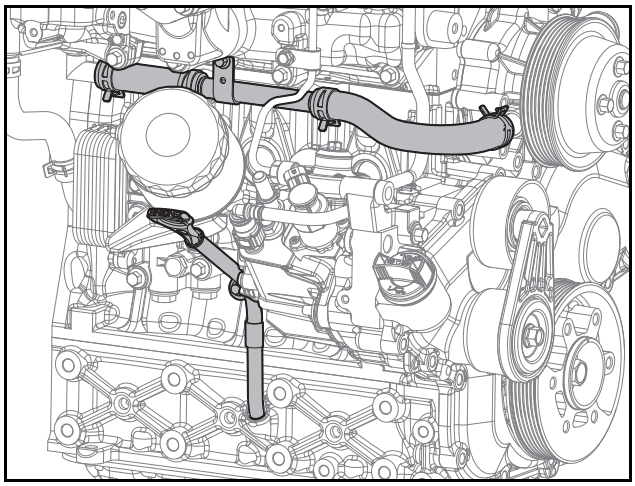

ED1819089

1) Replace the O-ring of the oil level gauge guide tube with a new part.
2) Insert the oil level gauge guide tube in the cylinder block and connect it.
3) Tighten flange hex bolts at a tightening torque of 1.0 kgf·m.
4) Mount the oil level gauge.

⚠ CAUTION

Make the handle of the oil level gauge face the reverse direction from the center of the engine.

5) Connect the coolant hose.
6) Mount the hose clamps.

⚠ CAUTION

Do not use hose clamps more than twice; replace them with new ones.

7) Tighten flange hex bolts at a tightening torque at a tightening torque of 2.2 kgf·m.

41. Connect the throttle (inlet pipe) and the intake stake.

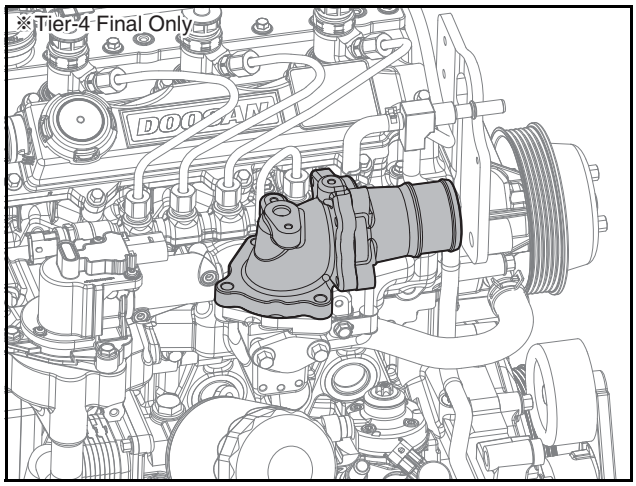

ED18190180

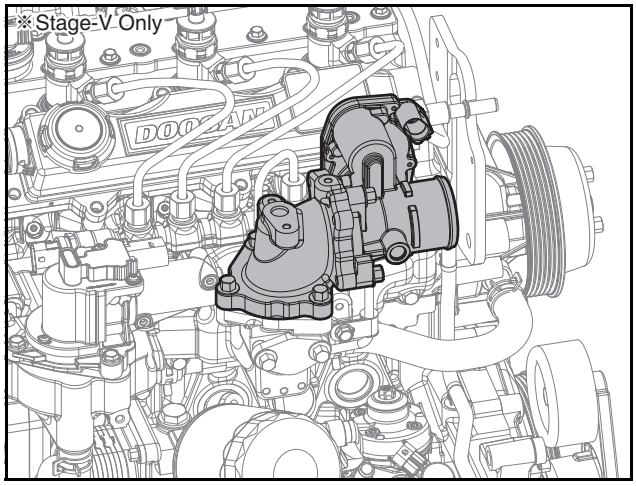

ED18190051

1) Mount the intake stake and the gasket to the intake manifold.
2) Tighten 3 hex bolts at a tightening torque of 2.2 kgf·m.
3) Connect the throttle (inlet pipe) and the gaskets to the intake stake.

4) Tighten 3 hex bolts at a tightening torque of 2.2 kgf·m.

⚠ CAUTION

- **Be careful to note the direction when mounting the gasket.**
- **Be careful not to damage the gasket while mounting it.**

42. Connect the breather hose.

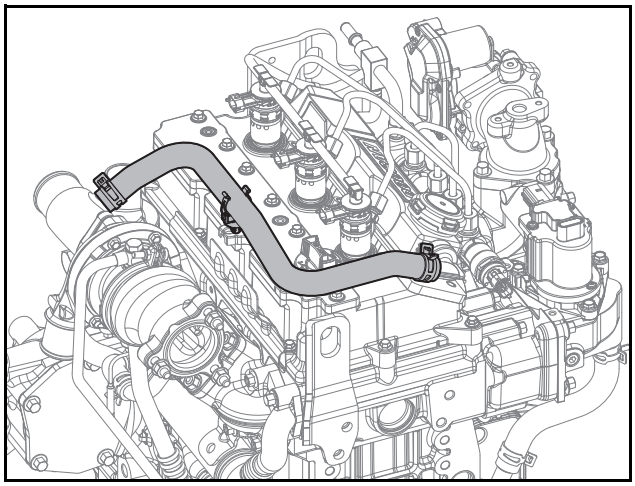

ED18190050

1) Connect the breather hose.
2) Mount the hose clamps.

⚠ CAUTION

Do not reuse the clamp if it has permanent deformation by irregular shape.

43. Attach the flywheel housing.

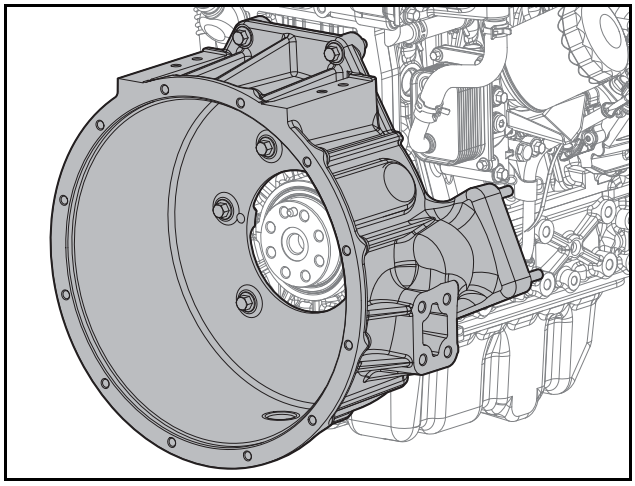

ED18190049

1) Align the flywheel housing to the pin and attach it.
2) Tighten 8 hex bolts at a tightening torque of 6.2 kgf·m.

44. Mount the flywheel.

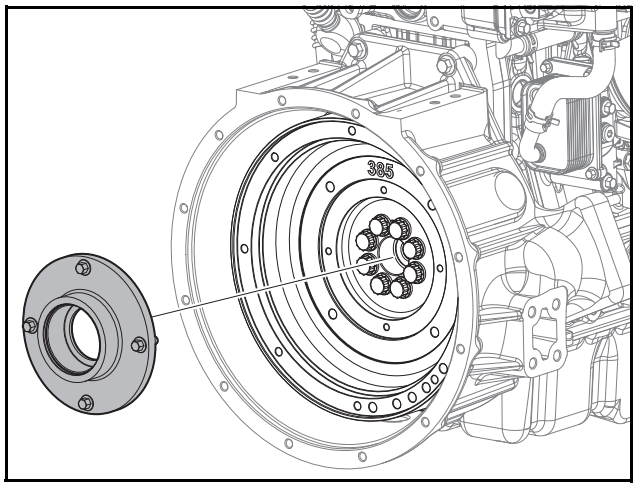

ED18190048

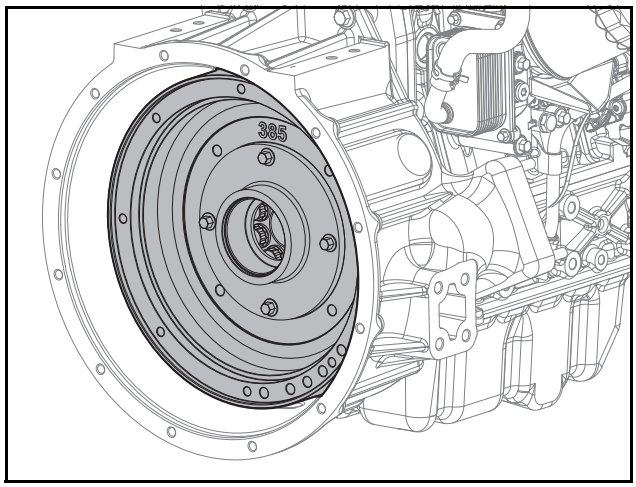

ED18190047

1) Mount the flywheel.
2) Tighten 8 Flange hex bolts at tightening Bolt torque.

Flywheel bolt (43 mm, option)	1st: 7 ±0.35 kgf·m/2nd: 45° ±4°
Flywheel bolt (25 mm, option) for flat type flywheel	17 ±0.85 kgf·m

⚠ CAUTION

Be careful that no foreign material (oil, etc.) is present in the bolt and tap.

45. Attach the starter.

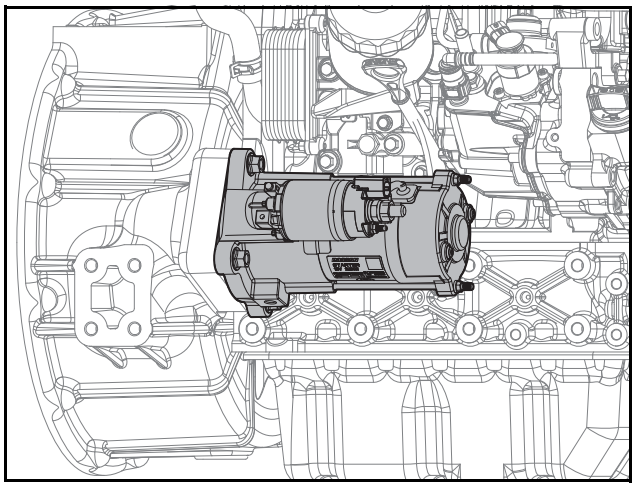

ED18190046

1) Align the starter with the pin and attach it.
2) Tighten 3 flange nuts at a tightening torque of 4.4 ±1.1 kgf·m.

46. Attach the alternator.

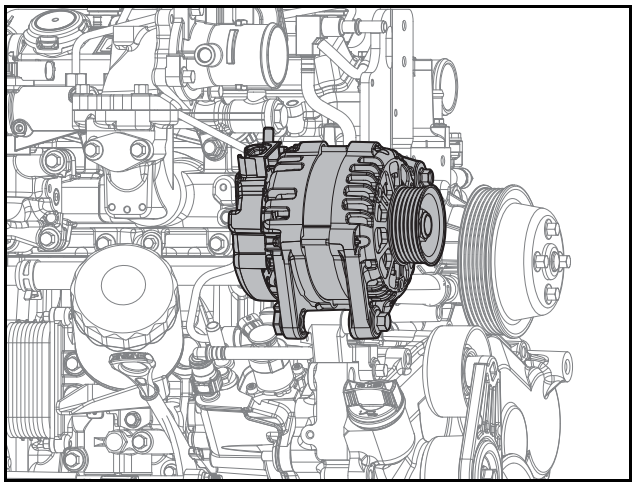

ED18190045

1) Using bolt B and nut, attach the alternator temporarily.
2) By tightening bolt, set the position of the alternator properly.
3) Tighten upper bolt to a torque of 2.2 ±0.2 kgf·m.
4) Tighten lower bolt to a torque of 6.2 ±0.6 kgf·m.

47. Attach the V-belt.

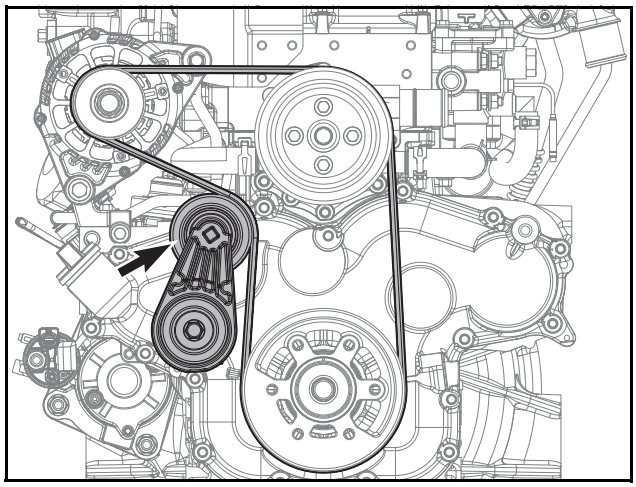

ED18190044

1) Wind a new belt around all pulleys except for the auto tensioner.
2) Turn the auto tensioner counterclockwise by using a quadrangular groove at the top of the auto tensioner pulley (Use a 10 mm x 10 mm quadrangular tool).
3) Wind the belt around the auto tensioner pulley by using a space generated by the rotation of the auto tensioner, and then naturally release the tensioner that has been pulled counterclockwise.

⚠ CAUTION

For checking and measuring the belt tension, refer to Belt Tension in Chapter 12 (Others/Driving Units).

48. Connect the cables and harness connected to each sensor of the engine.
49. Attach the engine to the machine.
50. Assemble the air cooler and the cooling fan on the engine.
51. Inject the engine oil.

1) Open the oil injection cap on the cylinder head cover top and inject engine oil.

⚠ CAUTION

Use genuine engine oil recommended by Hyundai Doosan Infracore.

52. Inject coolant.

1) Open the radiator cap and add coolant.

⚠ CAUTION

Use coolant recommended by Hyundai Doosan Infracore.

6. Cooling system

General information 103
General Information 103
Failure Diagnosis 104
Water pump 105
General Information 105
Water Pump Disassembly..... 105
Water Pump Assembly 106
Thermostat 108
General Information 108
Thermostat Disassembly 108
Thermostat Assembly 109
Check of Thermostat..... 109

General information

General Information

This engine is water-cooled. It uses coolant to cool the engine by absorbing heat from the combustion chamber and the engine oil and then releases the heat, allowing for normal engine operation.
In this cooling unit system, coolant provided by the water pump flows into the oil cooler through the coolant pipe to absorb oil heat and passes through the coolant jacket of the cylinder block and the cooling path of the cylinder head to absorb the combustion heat.

Coolant which absorbed the oil and combustion heat flows into the thermostat through the coolant pipe. If the coolant temperature is lower than the valve-opening temperature of the thermostat, the coolant flows into the water pump. If higher, it flows into the radiator. The radiator releases the heat absorbed from the coolant and sends the coolant to the water pump again.

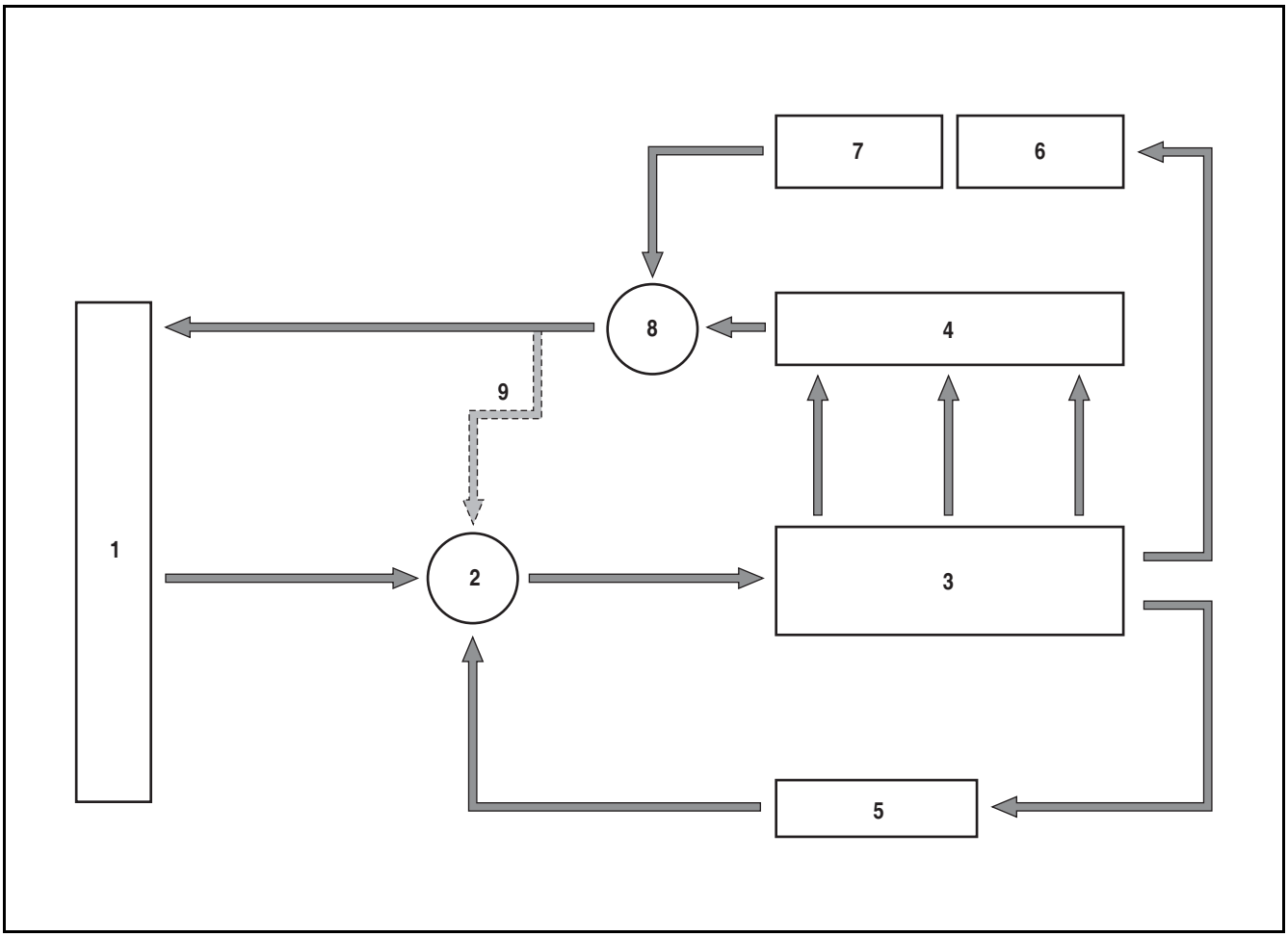

EDL022059C

1. Radiator
2. Water pump
3. Cylinder block
4. Cylinder head
5. Oil cooler
6. EGR valve
7. EGR cooler
8. Thermostat
9. Bypass

Failure Diagnosis

Phenomenon	Causes	Troubleshooting
Overheated engine	Not enough coolant	Replenish the coolant
	Defective radiator cap	Replace it
	Contaminated radiator	Clean the exterior of the radiator
	Defective V-belt offset	Adjust or replace it
	Contaminated or damaged V-belt	Replace it
	Damaged impeller	Replace the water pump
	Defective impeller fix	Replace the water pump
	Bad water pump operation	Replace it
	Bad thermostat operation	Replace it
	Bad coolant flow	Clean the coolant path
	Improper injection time	Check it with the failure diagnosis unit
	Damaged cylinder head gasket	Replace it
Overcooled engine	Bad thermostat operation	Replace it
	Too low ambient temperature	Heat the block
Leaking coolant	Damaged radiator	Repair or replace it
	Loosened or damaged radiator connection	Repair or replace the connection
	Defective radiator cap	Replace it
	Badly mounted water pump	Repair or replace it
	Bad or damaged water pump gasket	Replace the gasket
	Badly mounted thermostat	Repair or replace it
	Bad or damaged thermostat gasket	Replace the gasket
	Damaged cylinder head gasket	Replace the gasket
	Damaged cylinder head or block	Replace it
Noise	Bad water pump bearing	Replace the bearing
	Bad or damaged cooling fan	Repair or replace it
	Bad rotation of the cooling fan	Replace it
	Defective V-belt offset	Adjust or replace it

Water pump

General Information

The water pump prevents the engine from being overheated by combustion heat during engine operation and delivers coolant from the radiator to each part of the engine.

Water Pump Disassembly

1. Drain coolant.

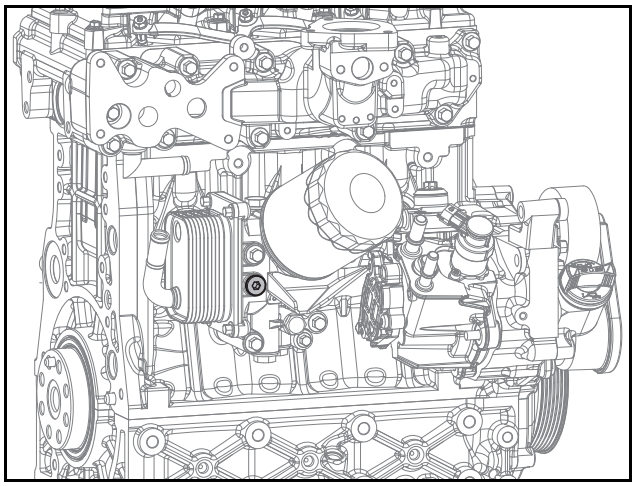

ED18190181

1) Check if the engine and radiator are cooled.
2) Place a container in front of the coolant drain plug.
3) Remove the radiator cap.
4) Remove the coolant drain plug of the radiator and then drain coolant.
5) After completing coolant drain, connect the coolant drain plug again.

⚠ DANGER

- **Do not open the radiator cap while the engine is overheated. If the radiator cap is opened while the engine is heated, hot water will spurt out and may cause serious burns. Open the radiator cap after making sure that the engine has been fully cooled.**
- **Mark and separately manage the containers for storing coolant from beverage containers for avoiding confusion. See a doctor immediately in case of drinking coolant.**

⚠ WARNING

Discard exchanged coolant according to the regulations set forth by the relevant authorities. Disposing of exchanged coolant into the ground, sewers, drains, rivers, or the sea will cause serious environmental pollution. Violation of regulations regarding discard of engine oil without observing the handling regulations will be punished.

⚠ CAUTION

Be careful not to allow coolant to touch any belts or electric apparatus when replacing the coolant.

2. Remove the micro V belt

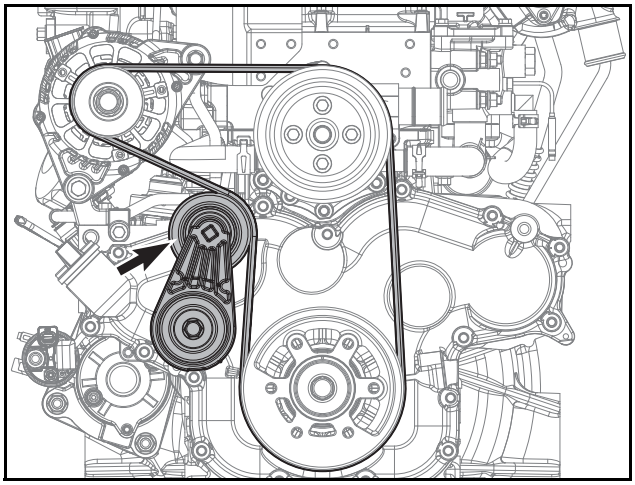

ED18190044

1) Turn the auto tensioner counterclockwise by using a quadrangular groove at the top of the auto tensioner pulley (Use a 10 mm x 10 mm quadrangular tool).
2) Remove the belt wound around the auto tensioner pulley by using a space generated by the rotation of the auto tensioner.

3. Detach the alternator.

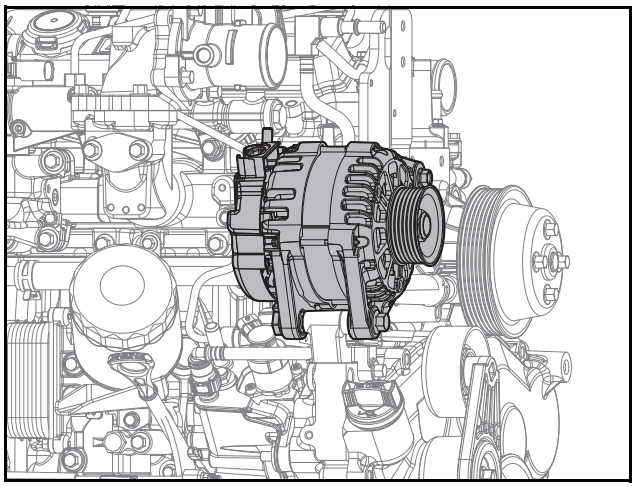

ED18190045

1) Loosen the upper/lower bolt and remove the alternator.
2) When loosing bolt, take care not to lose nut.
4. Remove the coolant pump pulley.

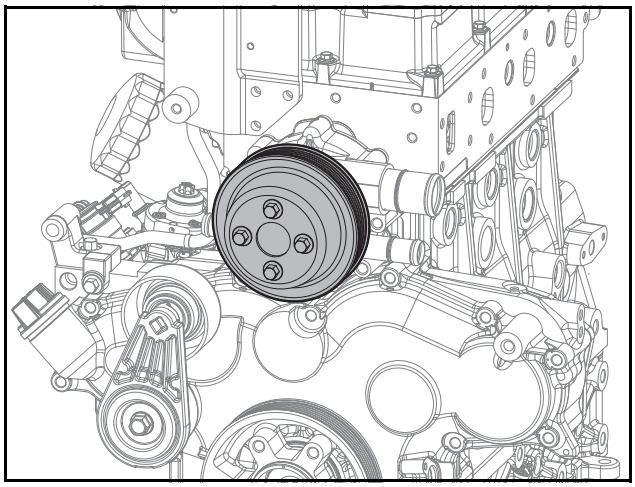

ED18190056

1) Loosen 4 hex bolts.
2) Remove the coolant pump pulley.
5. Remove the coolant pump.

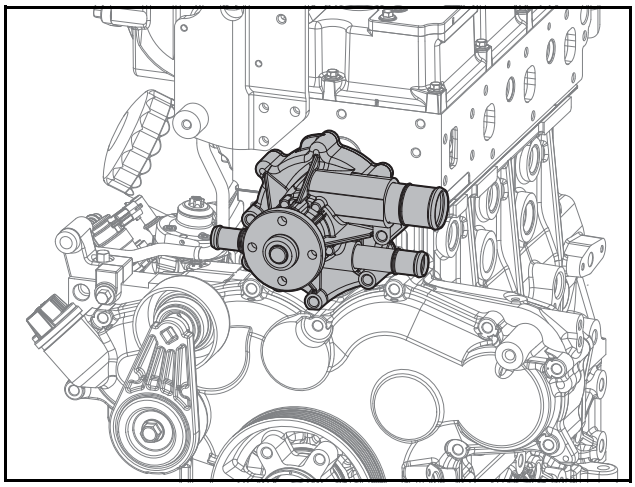

ED18190057

1) Loosen 4 hex bolt and 2 flange hex nut.
2) Remove the coolant pump and the gasket.

Water Pump Assembly

1. Attach the water pump.

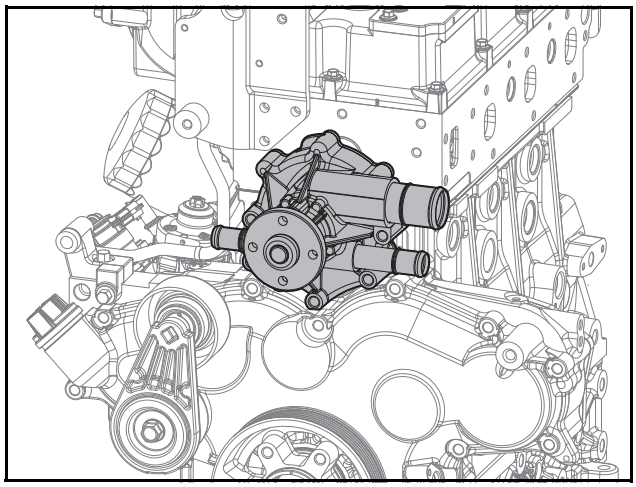

ED18190057

1) Align the gasket with the stud bolts and mount it.
2) Align the coolant pump with the stud bolts and attach it.
3) Tighten 4 hex bolts and 2 flange hex nuts at a tightening torque of 2.2 kgf·m.

⚠ CAUTION

- **Do not allow the gasket to protrude from or be to one side of the coolant pump.**
- **Be careful not to damage the gasket while mounting it.**

2. Attach the water pump pulley.

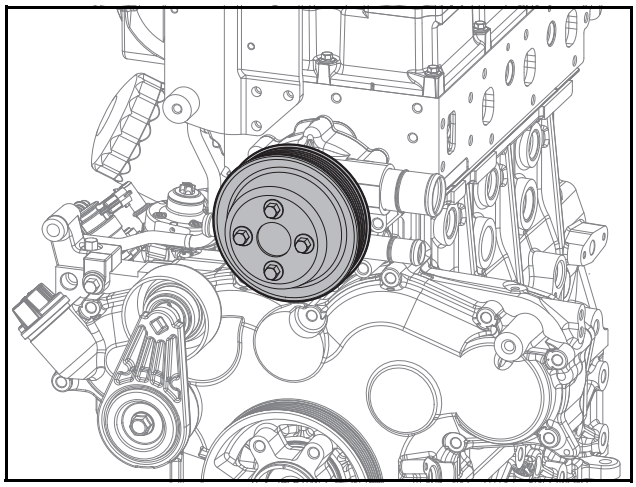

ED18190056

1) Attach the water pump pulley.
2) Tighten 4 hex bolts at a tightening torque of 2.2 kgf·m.

3. Attach the alternator.

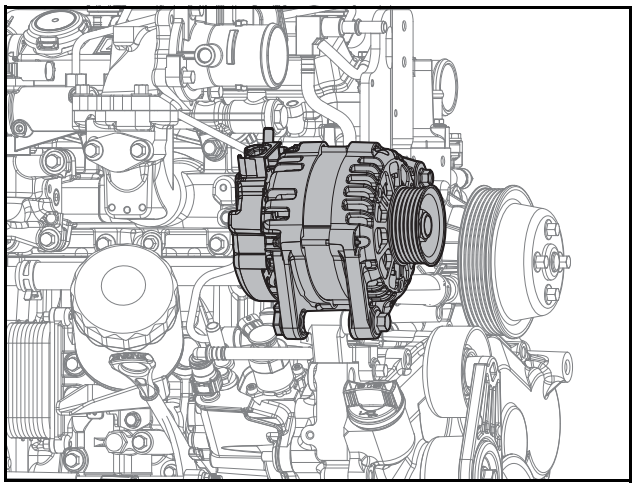

ED18190045

1) Using bolt and nut, attach the alternator temporarily.
2) By tightening bolt, set the position of the alternator properly.
3) Tighten upper bolt to a torque of 2.2 ±0.2 kgf·m.
4) Tighten lower bolt to a torque of 6.2 ±0.6 kgf·m.

4. Attach the V-belt.

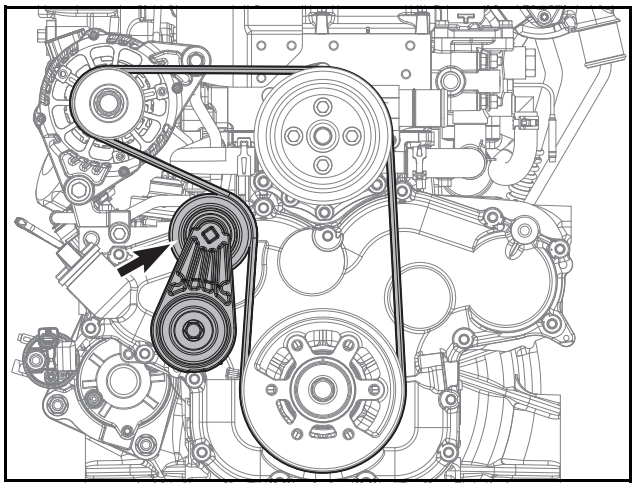

ED18190044

1) Wind a new belt around all pulleys except for the auto tensioner.
2) Turn the auto tensioner counterclockwise by using a quadrangular groove at the top of the auto tensioner pulley (Use a 10 mm x 10 mm quadrangular tool).
3) Wind the belt around the auto tensioner pulley by using a space generated by the rotation of the auto tensioner, and then naturally release the tensioner that has been pulled counterclockwise.

⚠ CAUTION

For checking and measuring the belt tension, refer to Belt Tension in Chapter 12 (Others/Driving Units).

5. Add coolant.

1) Open the radiator cap and add coolant.

⚠ WARNING

Use coolant recommended by Hyundai Doosan Infracore.

Thermostat

General Information

The thermostat maintains water temperature in the engine consistently and prevents heat loss to improve heat efficiency of the engine.
When the coolant temperature is below the normal temperature, the thermostat is closed and the coolant is bypassed and directly flows into the water pump. When the coolant temperature reaches the normal temperature or is higher than the temperature, the thermostat is fully open and the bypass circuit is closed. So the coolant flows into the radiator.

⚠ CAUTION

- **The wax pellet type thermostat shows slower response to the change of cooling water than the bellows type thermostat. This happens because the heat capacity of the wax pellet type thermostat is larger than that of the bellows type thermostat. Therefore, to prevent a rapid increase in the engine coolant's temperature, you must first operate the engine at idle until the engine is fully warmed up. When the weather is very cold, do not operate the engine in an overloaded condition or at a high speed after starting the engine.**
- **When draining water from the engine cooler or injecting water to the engine cooler, work slowly to ensure that all air inside the cooler is expelled.**
- **When a defect is found in the thermostat, replace it with a new one.**

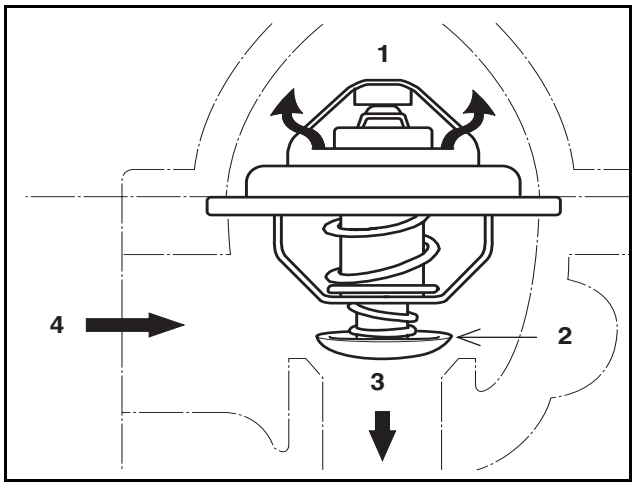

EDL022060A

1. Radiator
2. Bypass valve
3. Water pump
4. Coolant inlet

Thermostat Disassembly

⚠ CAUTION

Detaching the thermostat itself may degrade cooling performance. Do not detach the thermostat itself.

1. Drain coolant until the coolant level is below the thermostat height.
2. Remove the thermostat.

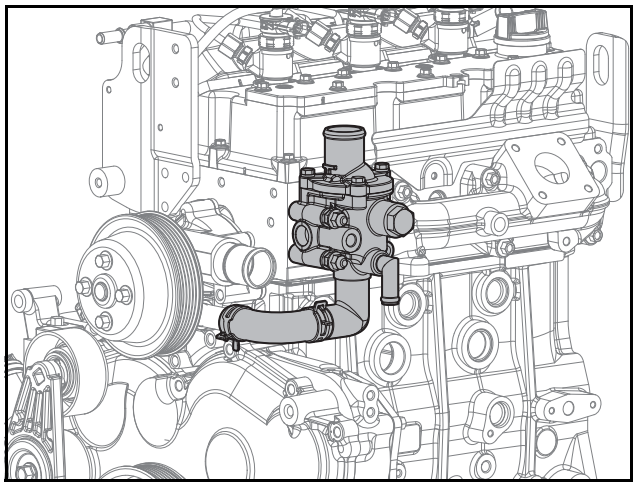

ED18190054

1) Remove the hose clamps.
2) Disconnect the rubber hose.
3) Loosen 2 flange hex bolt, 2 space bolt and 2 flange hex nut.
4) Remove thermostat.

Thermostat Assembly

1. Mount the thermostat.

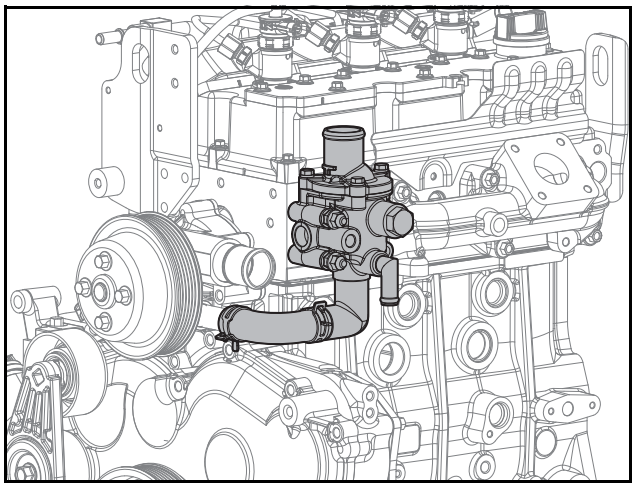

ED18190054

1) Mount the thermostat to the cylinder head.
2) Tighten 2 flange hex bolt, 2 space bolt and 2 flange hex nut as a tightening.
3) Tighten 3 flange hex bolts at a tightening torque of 2.2 kgf·m.
4) Connect the rubber hose.
5) Mount the hose clamps.

⚠ CAUTION

- **After mounting the hose clamps, make the protrusion face the cylinder head side to prevent interference between the protrusion and the coolant pump pulley.**
- **Do not use the hose clamps more than twice; replace them with new ones.**

2. Replenish the coolant.

Check of Thermostat

1. Check whether the wax pellet and the spring are damaged or not.
2. Put the water temperature controller into water and heat the water slowly to check water temperature controller operation.
3. The water temperature controller is normal in following case: The opening and fully open temperature is refer the next page.

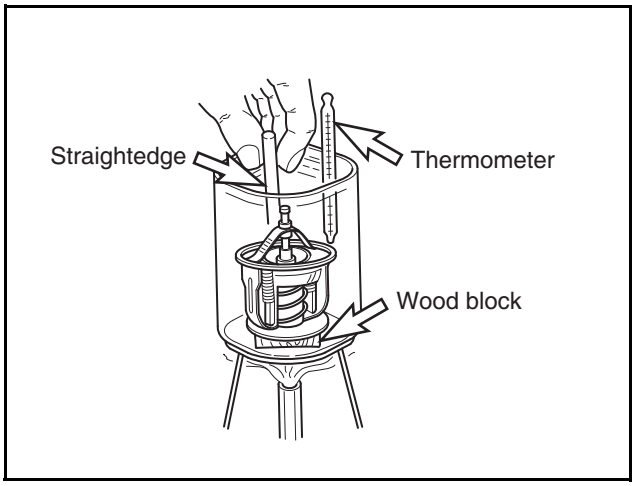

EDM03190404

4. Check if there is any foreign substances in the water temperature controller.

Note) Clean the inside of water temperature controller with an air gun.

5. Check if there are any foreign substances of damage part inside and outside of hose.

<The open and full open temperature as Hyundai Doosan Infracore part number>

Type	Opening Temp.	Full Open Temp.	Full Open Lift
Type 1	71 ±2°C	85°C	>8 mm
Type 2	79 ±2°C	94°C	>8 mm
Type 3	83 ±2°C	95°C	>8 mm

7. Lubrication system

General information 113

General Information 113

Failure Diagnosis 114

Oil pump 115

General Information 115

Oil Pump Disassembly 115

Oil Pump Assembly 117

Check of Oil Pump 119

Disassembly of Oil Suction Pipe and Oil Delivery Pipe 119

Assembly of Oil Suction Pipe and Oil Delivery Pipe 120

Oil filter assembly 122

General Information 122

Disassembly of Oil Filter Assembly 122

Assembly of Oil Filter Assembly 123

Check of Oil Cooler 124

Oil pan 125

Disassembly of Oil Pan 125

Assembly of Oil Pan 125

Disassembly of Engine Oil Level Gauge and Guide Tube 126

Assembly of Engine Oil Level Gauge and Guide Tube 126

General information

General Information

This engine is a forced lubrication type of engine. Oil pressure is generated and delivered by rotating the gear of the oil pump which is directly engaged with the crankshaft gear on the front of the cylinder block.
The oil pump delivers oil sucked from the oil pan with the suction pipe to the main path of the cylinder block through the oil cooler and oil filter.

From the cylinder block, oil is delivered to the crankshaft bearings, camshaft bearings, and rocker arm for lubrication. In addition, the turbocharger is connected to the engine lubrication circuit. Around the cylinder block and the timing gear, lubricating oil is dispersed. Each cylinder has an oil injection nozzle for cooling the bottom of the piston. Engine oil is filtered through the oil filter and purified.

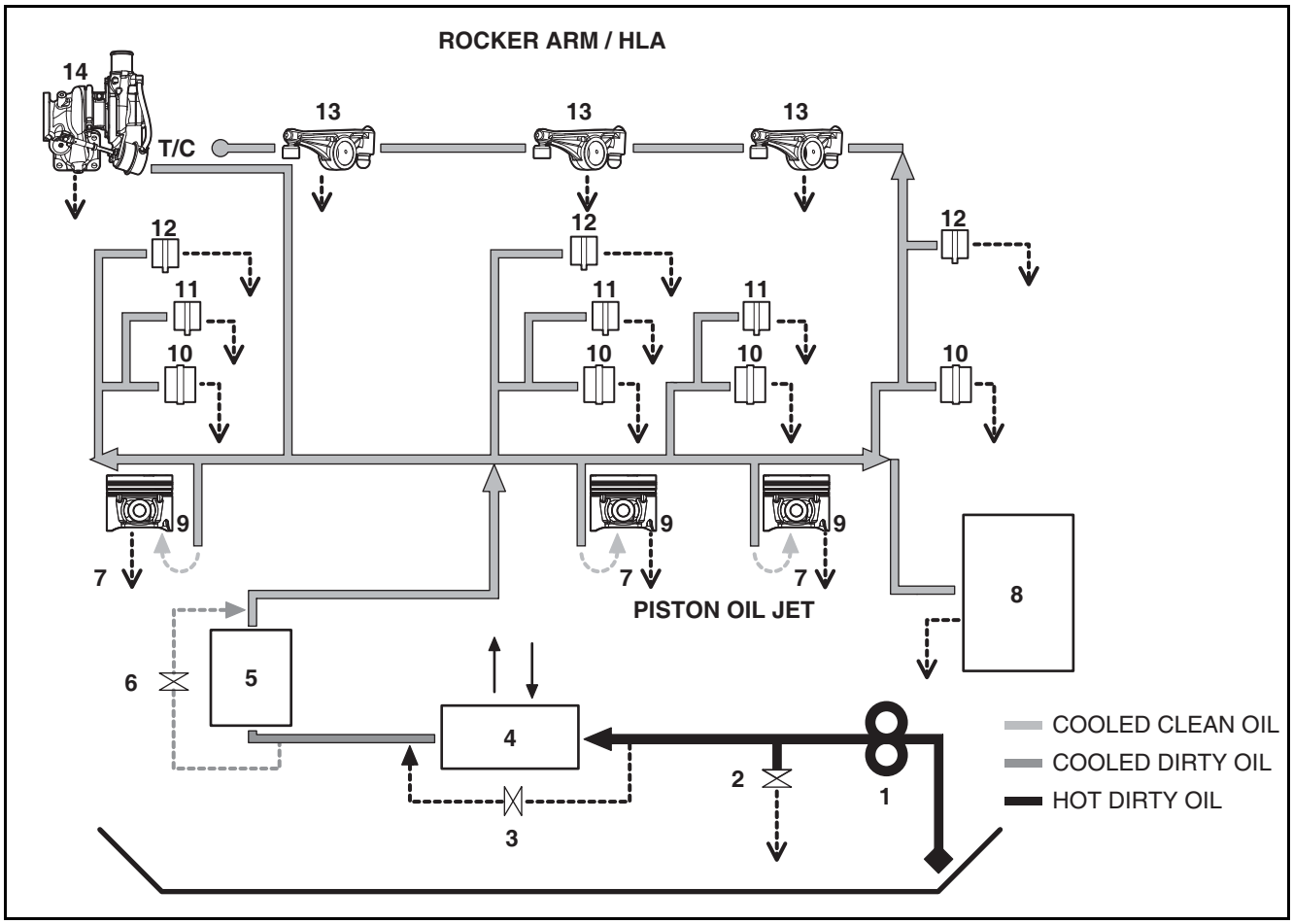

ED18190107

1. Oil pump
2. Relief valve
3. Bypass valve
4. Oil cooler
5. Oil filter
6. Bypass valve
7. Piston cooling jet
8. Idle gear
9. Piston
10. Crankshaft main bearing
11. Connecting rod bearing
12. Camshaft bearing
13. Rocker arm
14. Turbocharger

Failure Diagnosis

Phenomenon	Causes	Troubleshooting
Too much oil consumption	Bad oil	Replace oil with specified oil.
	Oil leakage from the oil seal ring and packing part	Replace it
	Worn or damaged piston and piston ring	Replace it
	Worn cylinder liner	Replace it
	Burnt piston ring	Replace it
	Worn valve guide oil seal, valve guide, or valve stem	Replace it
Low oil pressure	Bad oil	Replace oil with specified oil.
	Burnt oil pump relief valve	Replace it
	Clogged oil pump strainer	Cleanse the strainer
	Worn oil pump gear	Replace it
	Cracked oil delivery pipe of the oil pump	Replace it
	Defect oil pump	Repair or replace it
	Oil pressure gauge fault	Repair or replace it
	Worn bearings	Replace it
Contaminated oil	Clogged oil filter	Replace the oil filter with a new one
	Gas leakage	Replace piston ring with a new one
	Bad oil	Replace oil with specified oil.

Oil pump

General Information

Engine oil is sucked from the oil pan by the gear type oil pump and then all of the oil is forcibly delivered to the oil cooler and filter for filtering. The filtered oil passes through the main oil path of the cylinder block and lubricates bearing parts and the turbocharger of the engine in order to maintain normal engine performance.

Oil Pump Disassembly

1. Drain the engine oil.

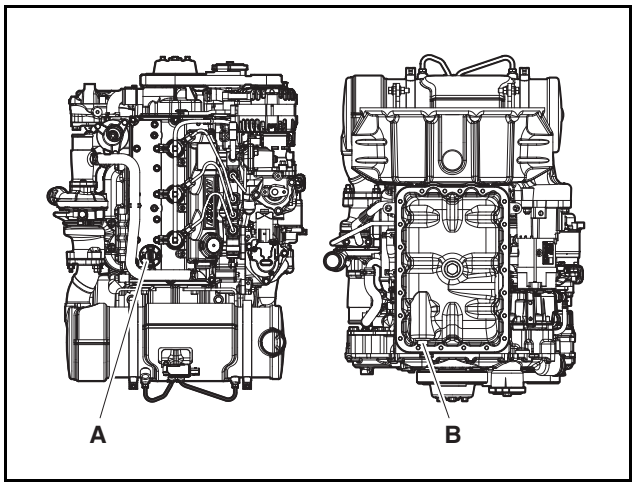

ED18190043

1) Place a container under the engine to drain the engine oil.
2) Remove the oil cap (A).
3) Remove the drain plug (B) and drain the engine oil.

⚠ WARNING

Discard oil according to the regulations set forth by the relevant authorities. Disposing of discharged oil into the ground, sewers, drains, rivers, or the sea will cause serious environmental pollution. Violation of regulations when discarding engine oil without observing the handling regulations, will be punished.

2. Remove the V-belt.

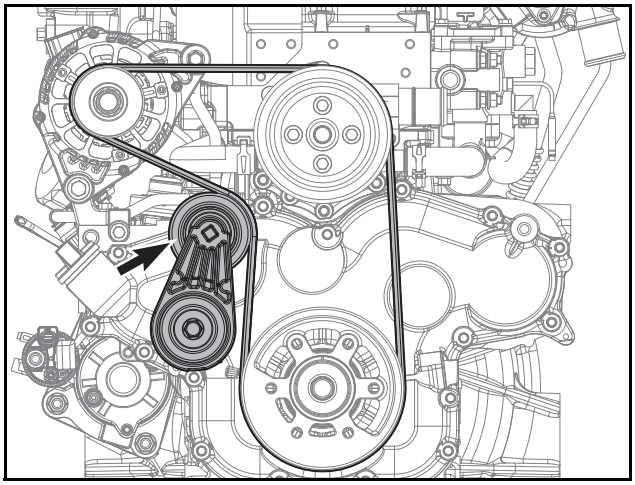

ED18190044

1) Turn the auto tensioner counterclockwise by using a quadrangular groove at the top of the auto tensioner pulley (Use a 10 mm x 10 mm quadrangular tool).
2) Remove the belt wound around the auto tensioner pulley by using a space generated by the rotation of the auto tensioner.
3. Remove the crankshaft pulley.

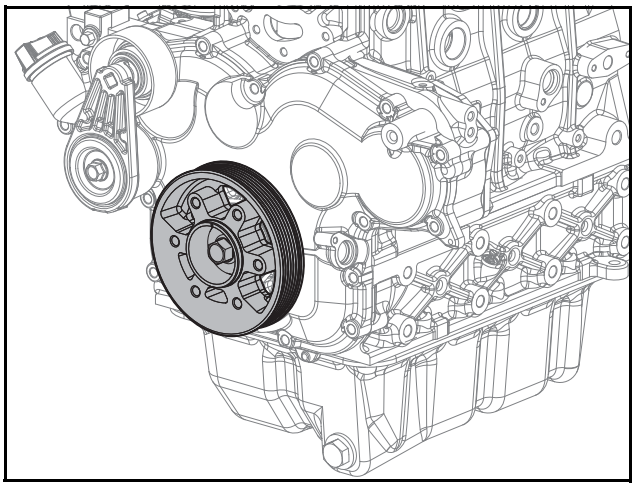

ED1819074

1) Loosen the flange hex bolt.
2) Remove the crankshaft pulley.

⚠ CAUTION

Be careful not to damage the oil seal.

4. Remove the timing gear case.

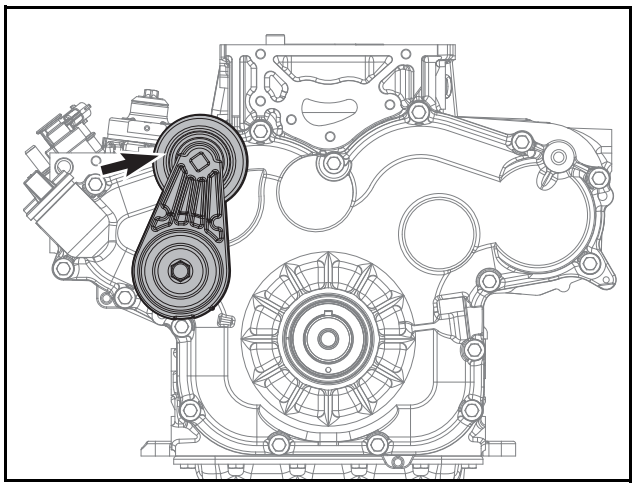

ED24190138

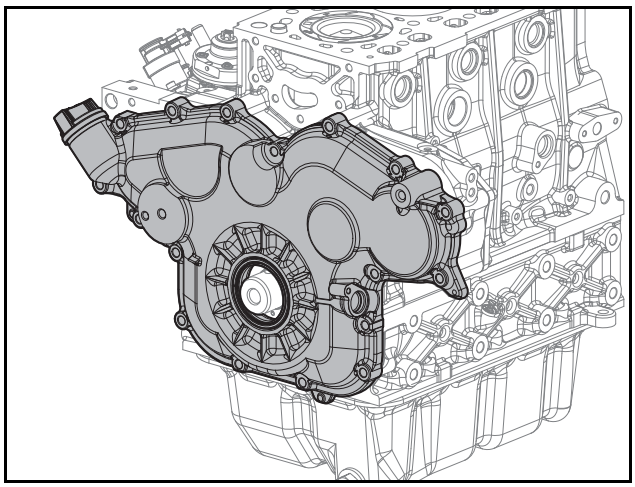

ED1819076

1) Loosen the fixing bolt and remove the crank speed sensor.
2) Loosen 16 hex bolts.
3) Remove the timing gear case.

⚠ CAUSTION

Do not reuse the oil seal; replace them with new ones.

5. Remove the timing wheel.

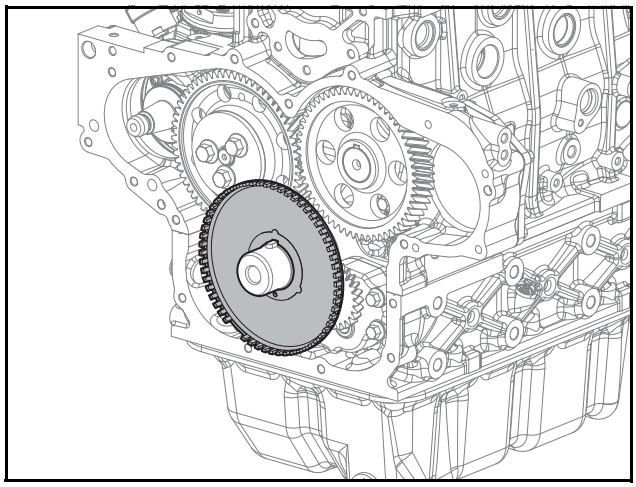

ED1819077

1) Remove the timing wheel.
6. Remove the oil pump.

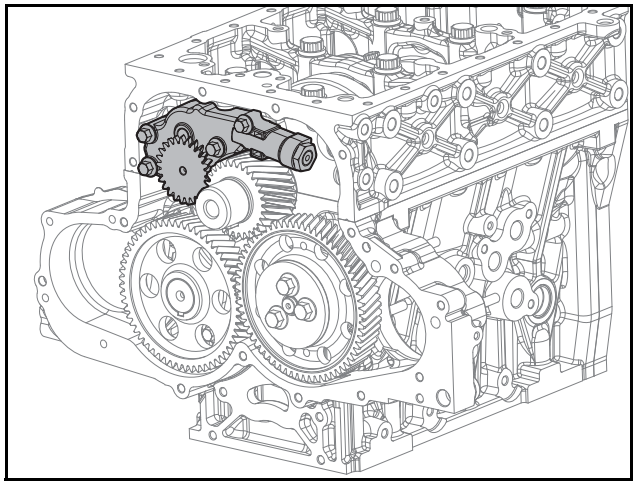

ED1819081

1) Loosen 4 hex bolts.
2) Remove the oil pump and 2 O-rings.

Oil Pump Assembly

1. Attach the oil pump.

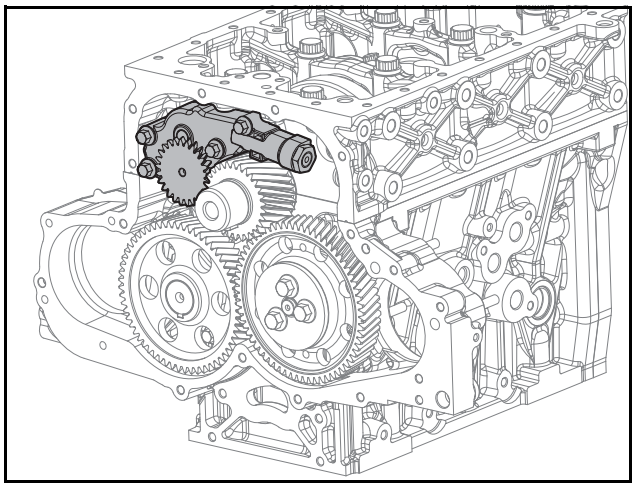

ED1819081

1) Align 2 O-rings to the engine oil inlet and outlet.
2) Align the oil pump with the pin and press it to the cylinder block as much as possible.
3) Tighten 4 hex bolts at a tightening torque of 2.2 kgf·m.
4) The backlash between the crankshaft gear and the oil pump gear is 0.060 ~ 0.259 mm.

Item	Specified Value
Backlash between the crankshaft gear and the oil pump gear	0.060 ~ 0.259 mm

⚠ CAUTION

- **Make sure that the O-rings have been mounted.**
- **Be careful not to damage the O-rings while mounting them.**

2. Attach the timing wheel.

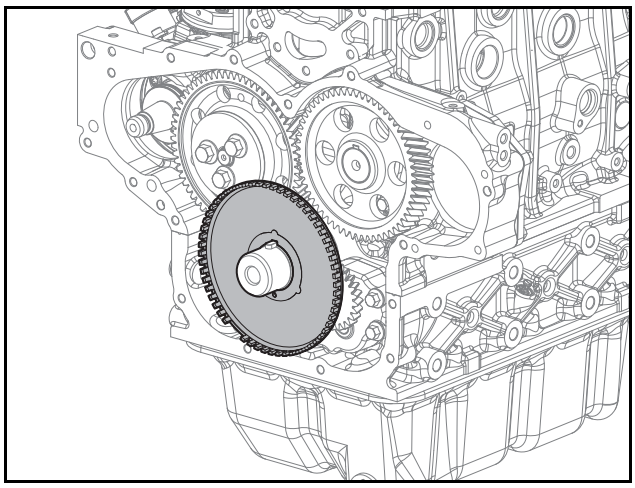

ED1819077

1) Align the timing wheel to the pin and attach it to the crankshaft gear surface.

⚠ CAUTION

Be careful not to damage the teeth of the timing wheel.

3. Attach the timing gear case.

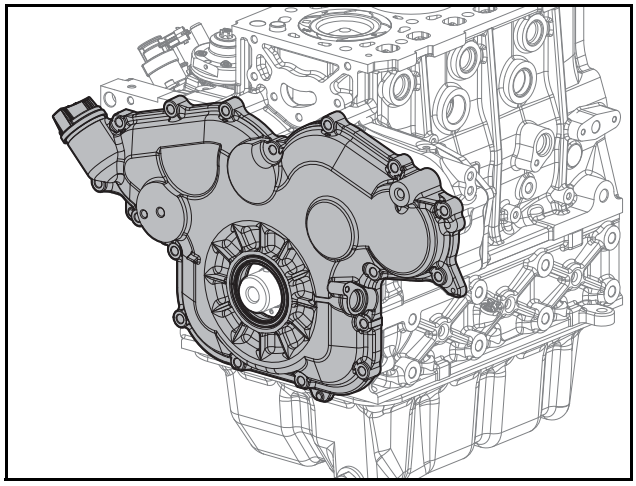

ED1819076

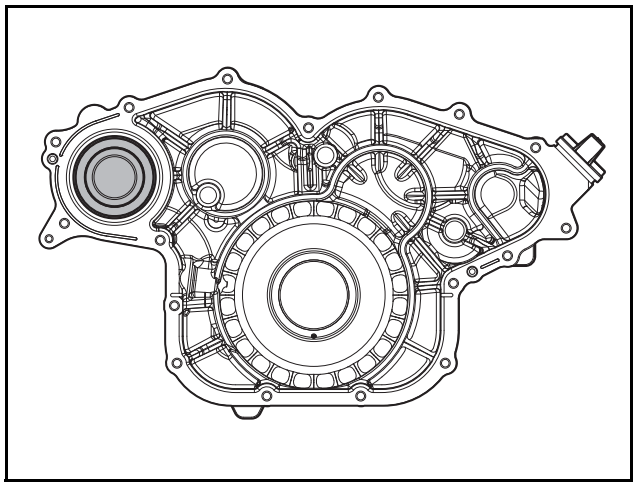

EDM02200047

Note) Apply as follows and use TB1217H equivalent product.

Note) Apply to the surface of TGC cover with ø2.5 ±0.5 mm thickness.

Note) The PTO bearing is included in the timing gear case. Hence, in the event of a bearing defect, replace the entire TGCC (Timing Gear Case Cover) assembly.

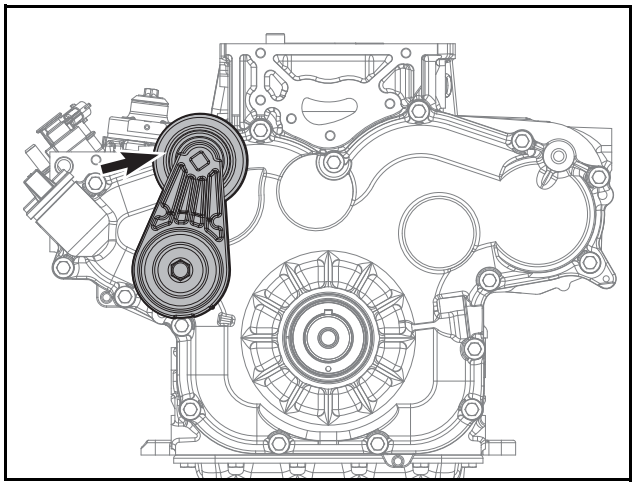

ED24190138

1) Make the assembly surface of the timing gear case face the ground.
2) Mount the front oil seal to the front oil seal assembly jig.
3) Align the front oil seal assembly jig where the front oil seal is mounted to the timing gear case and beat it with a rubber hammer.
4) when the front oil seal is inserted to the timing gear case, pull off the front oil seal assembly jig.

⚠ CAUTION

- **Be careful in noting the direction of the oil seal assembly and ensuring that the oil seal surface fasces the outside of the engine.**
- **Be careful of the depth of the oil seal when attaching it.**
- **Be careful not to damage the oil seal.**
- **Attach the oil seal without applying lubrication. coolant, fuel, sealant (TB1217H), or silicon.**
- **Remove foreign substances such as residues from the oil seal assembly bore.**
- **Do not reuse the oil seal; replace it with a new one.**
- **Be careful not to damage the oil seal when attaching it.**

5) Remove the foreign substances on the timing gear case assembly surface and clean it with a dry cloth.
6) Apply sealant (TB1217H) to the timing gear case assembly surface with the diameter of Ø2.5 ±0.5 mm.

⚠ CAUTION

- **Be careful that the timing gear case has been attached in the right direction.**
- **Attach parts within five minutes of applying sealant (TB1217H) onto the parts.**
- **Do not start the engine or load pressure for 25 minutes after applying sealant (TB1217H) onto the parts**

7) Align the timing gear case with the pin and attach it.
8) Tighten 16 hex bolts at a tightening torque of 2.2 kgf·m.
9) Mount the crank speed sensor and then tighten the fixing bolt.

4. Attach the crankshaft pulley.

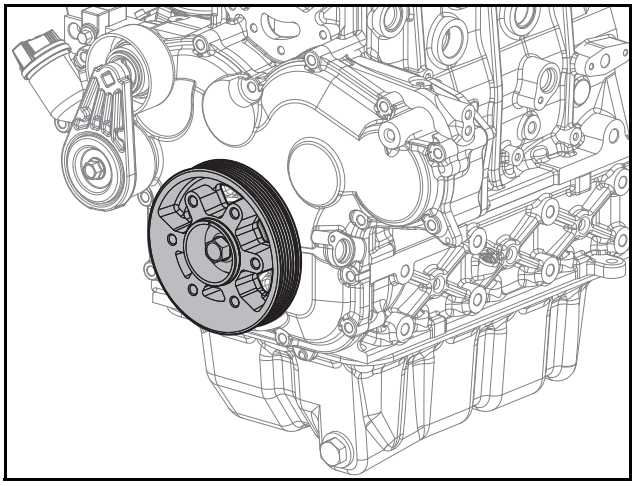

ED1819074

1) Align the crankshaft pulley to the pin and attach it.
2) Tighten flange hex bolts at a tightening torque of 26 kgf·m.

⚠ CAUTION

- **Be careful not to damage the oil seal.**
- **Fix the crankshaft to allow the flange hex bolts to be tightened with the specified torque.**

5. Attach the V-belt.

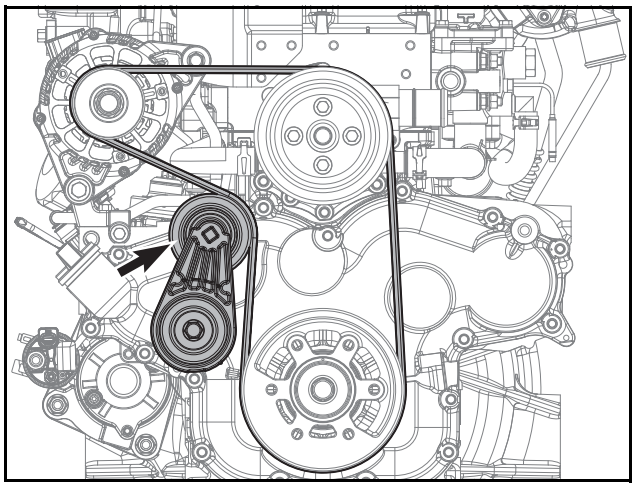

ED18190044

1) Wind a new belt around all pulleys except for the auto tensioner.
2) Turn the auto tensioner counterclockwise by using a quadrangular groove at the top of the auto tensioner pulley (Use a 10 mm x 10 mm quadrangular tool).
3) Wind the belt around the auto tensioner pulley by using a space generated by the rotation of the auto tensioner, and then naturally release the tensioner that has been pulled counterclockwise.

⚠ CAUTION

For checking and measuring the belt tension, refer to Belt Tension in Chapter 12 (Others/Driving Units).

6. Inject the engine oil.
1) Open the oil injection cap on the cylinder head cover top and inject engine oil.

⚠ CAUTION

Use genuine engine oil recommended by Hyundai Doosan Infracore.

Check of Oil Pump

1. With the gap gauge, check if the oil pump gear backlash is within the range of 0.060 ~ 0.259 mm.
2. Make sure that the oil pump gear spins smoothly when spinning it with the torque of 3.0 kgf·cm.

Item	Specified Value
Oil pump gear backlash	0.060 ~ 0.259 mm

Disassembly of Oil Suction Pipe and Oil Delivery Pipe

1. Drain the engine oil.

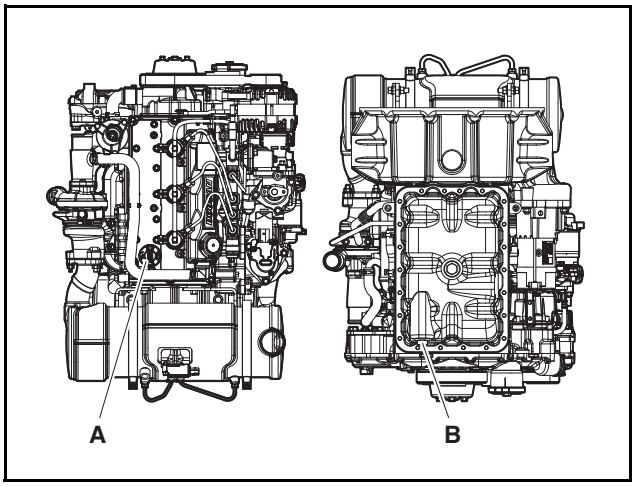

ED18190043

1) Place a container under the engine to drain the engine oil.
2) Remove the oil cap (A).
3) Remove the drain plug (B) and drain the engine oil.

⚠ WARNING

Discard oil according to the regulations set forth by the relevant authorities. Disposing of discharged oil into the ground, sewers, drains, rivers, or the sea will cause serious environmental pollution. Violation of regulations when discarding engine oil without observing the handling regulations, will be punished.

2. Remove the oil pan.

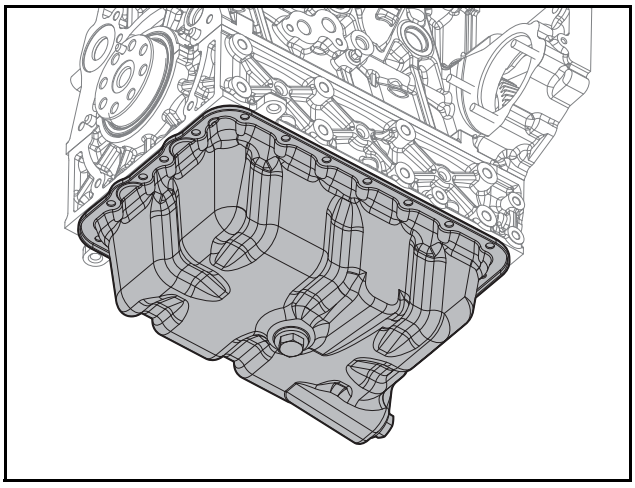

ED1819079

1) Remove the drain plug.
2) Remove the O-ring.
3) Loosen 22 flange hex bolts.
4) Remove the oil pan.

3. Disconnect the oil suction pipe and oil delivery pipe.

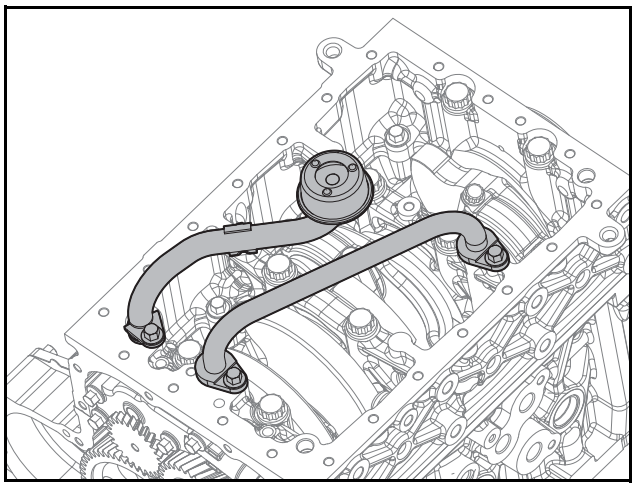

ED1819080

1) Loosen 2 hex bolts.
2) Remove the oil suction pipe and 1 O-ring.
3) Loosen 2 hex bolts.
4) Disconnect the oil delivery pipe and 2 O-rings.

Assembly of Oil Suction Pipe and Oil Delivery Pipe

1. Connect the oil suction pipe and the oil delivery pipe.

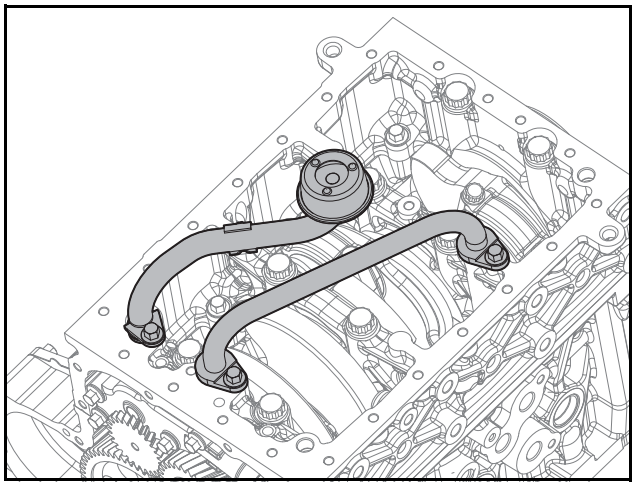

ED1819080

1) Connect the oil delivery pipe and 2 O-rings.
2) Tighten 2 hex bolt at a tightening torque of 2.2 kgf·m.
3) Connect the oil suction pipe and 1 O-ring.
4) Tighten 2 hex bolts at a tightening torque of 2.2 kgf·m.

⚠ CAUTION

- **Ensure that the O-rings of the inlet and the outlet have been mounted.**
- **Be careful not to damage the O-rings while mounting them.**

2. Attach the oil pan.

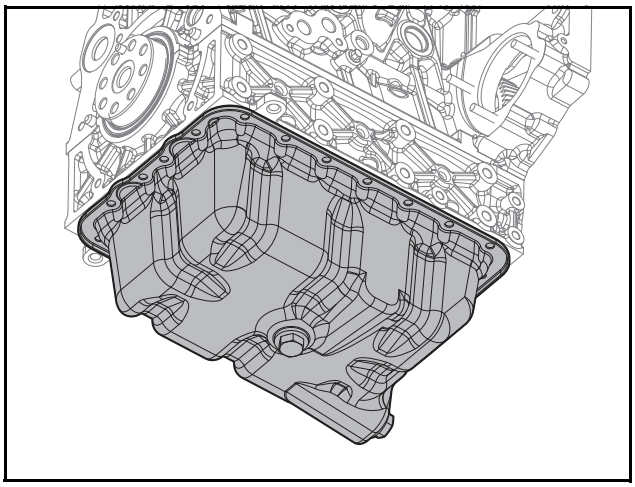

ED1819079

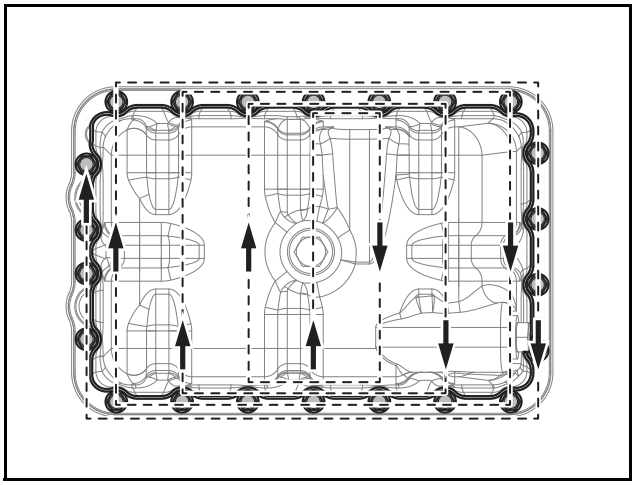

EDM01200127

1) Apply sealant (TB1217H) to the oil pan assembly surface with the diameter of Ø3 ±0.5 mm.

⚠ CAUTION

- **Be careful that the oil pan has been attached in the right direction.**
- **Attach parts within five minutes after applying sealant (TB1217H) onto the parts.**
- **Do not start the engine or load pressure for 25 minutes after applying sealant (TB1217H) onto the parts.**

2) Attach the oil pan.

3) Tighten 22 flange hex bolts at a tightening torque of 2.2 kgf·m.

⚠ CAUTION

Tighten flange hex bolts in the order. The front engine direction is the water pump direction and the rear engine direction is the Drive Plate direction.

4) Mount the O-ring.
5) Connect the drain plug at a tightening torque of 3 kgf·m.

3. Inject the engine oil.

1) Open the oil injection cap on the cylinder head cover top and inject engine oil.

⚠ CAUTION

Use genuine engine oil recommended by Hyundai Doosan Infracore.

Oil filter assembly

General Information

The oil cooler cools oil with coolant and the oil filter removes the foreign substances from the oil.

Disassembly of Oil Filter Assembly

1. Drain the engine oil.

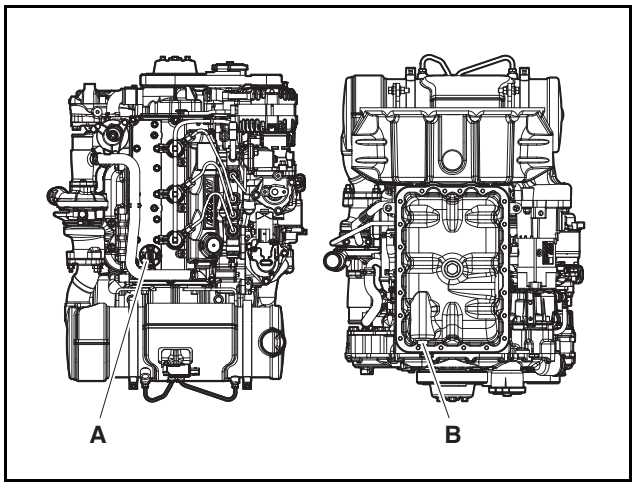

ED18190043

1) Place a container under the engine to drain the engine oil.
2) Remove the oil cap (A).
3) Remove the drain plug (B) and drain the engine oil.

⚠ WARNING

Discard oil according to the regulations set forth by the relevant authorities. Disposing of discharged oil into the ground, sewers, drains, rivers, or the sea will cause serious environmental pollution. Violation of regulations when discarding engine oil without observing the handling regulations, will be punished.

2. Disconnect oil level gauge and coolant hose.

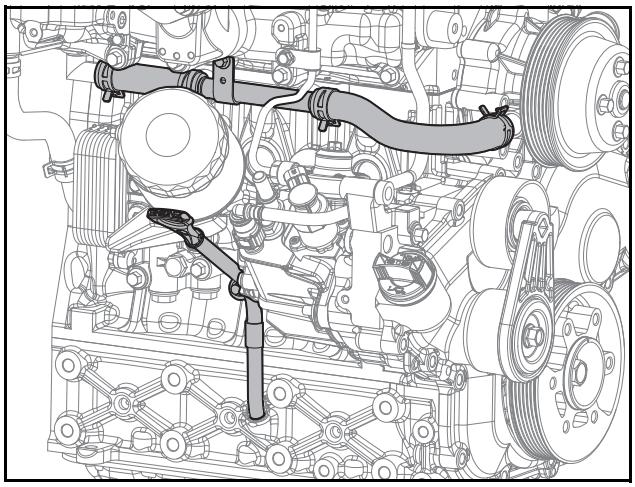

ED1819089

1) Loosen the flange hex bolt.
2) Remove the hose clamp.
3) Disconnect the coolant hose.
4) Remove the oil level gauge.
5) Loosen the flange hex bolt.
6) Disconnect the oil level gauge guide tube.
3. Detach the oil cooler and the oil filter module.

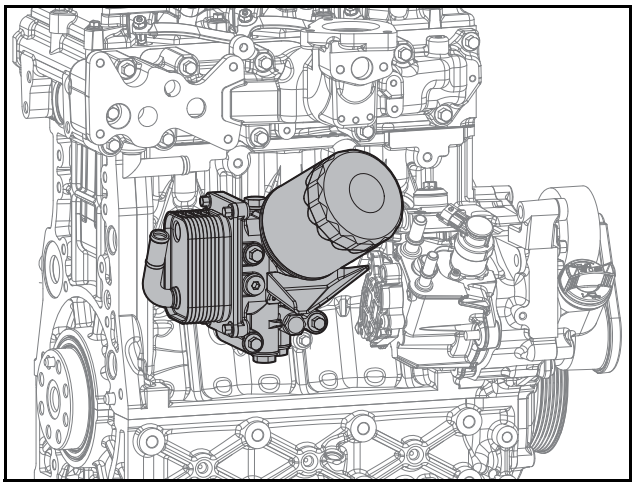

ED18190063

1) Detach the oil filter with the filter wrench.

⚠ CAUTION

Oil in the filter may run down while detaching the oil filter. Be careful not to contaminate the other parts by using a cloth when detaching the filter. After replacing the oil filter, wipe clean any other parts which the oil has touched.

2) Remove the oil filter module and the O-rings.
3) Loosen 3 flange hex bolts.
4) Remove the oil cooler and the O-rings from the oil filter module.

Assembly of Oil Filter Assembly

1. Attach the oil cooler and the oil filter module.

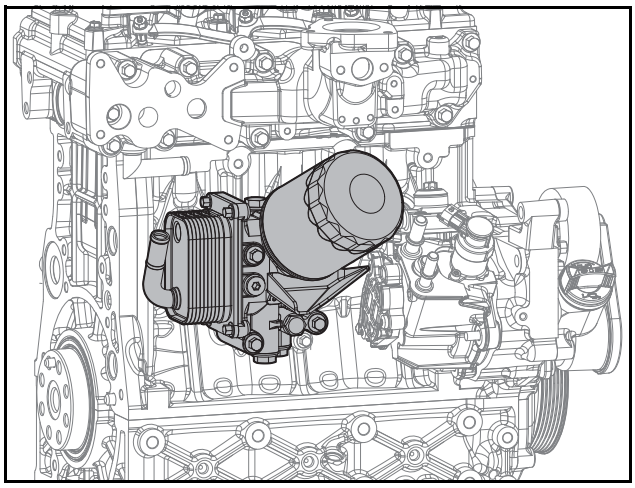

ED18190063

1) Mount the oil cooler and 3 O-rings to the oil filter module.
2) Tighten 3 flange hex bolts.
3) Mount the oil filter module and 3 O-rings to the cylinder block.

⚠ CAUTION

- **Make sure that the O-rings have been mounted.**
- **Be careful not to damage the O-rings while mounting them.**

4) Tighten 3 flange hex bolts at a tightening torque of 2.2 kgf·m.
5) Wipe the surface on which the oil filter is mounted clean.
6) Thinly spread engine oil over the rubber packing of the new oil filter.
7) Temporarily mount the oil filter by turning it by hand.
8) Mount the oil filter with the filter wrench at a tightening torque of 16 ~ 20 N·m.

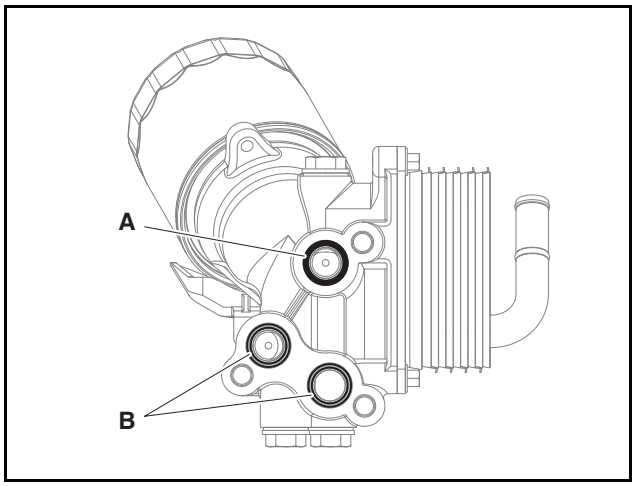

EDM02200226

⚠ CAUTION

Check the 1 O-ring at A (black) on the top of the oil filter and the 2 O-rings at B (yellow) on the bottom.

2. Mount the oil level gauge and the coolant hose.

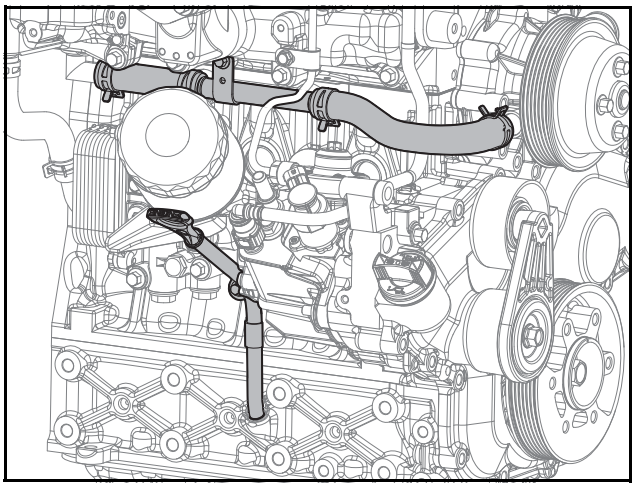

ED1819089

1) Replace the O-ring of the oil level gauge guide tube with a new part.
2) Insert the oil level gauge guide tube in the cylinder block and connect it.
3) Tighten flange hex bolts at a tightening torque of 1.0 kgf·m.
4) Mount the oil level gauge.

⚠ CAUTION

Make the handle of the oil level gauge face the reverse direction from the center of the engine.

5) Connect the coolant hose.
6) Mount the hose clamps.

⚠ CAUTION

Do not use hose clamps more than twice; replace them with new ones.

7) Tighten flange hex bolts at a tightening torque at a tightening torque of 2.2 kgf·m.
3. Inject the engine oil.
1) Open the oil injection cap on the cylinder head cover top and inject engine oil.

⚠ CAUTION

Use genuine engine oil recommended by Hyundai Doosan Infracore.

Check of Oil Cooler

1. Check if the coolant inlet of the oil cooler is damaged and if coolant has leaked.
2. Check if the oil inlet and outlet of the oil cooler are damaged and if oil has leaked.
3. Check if the exterior of the oil cooler is damaged and leakage has occurs.

Oil pan

Disassembly of Oil Pan

1. Drain the engine oil.

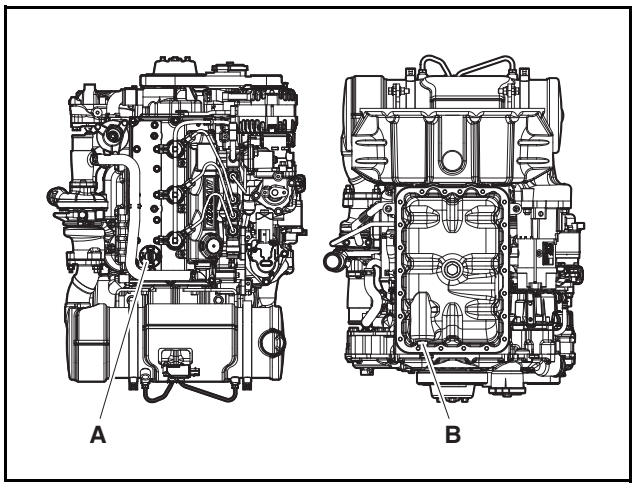

ED18190043

1) Place a container under the engine to drain the engine oil.
2) Remove the oil cap (A).
3) Remove the drain plug (B) and drain the engine oil.

⚠ WARNING

Discard oil according to the regulations set forth by the relevant authorities. Disposing of discharged oil into the ground, sewers, drains, rivers, or the sea will cause serious environmental pollution. Violation of regulations when discarding engine oil without observing the handling regulations, will be punished.

2. Remove the oil pan.

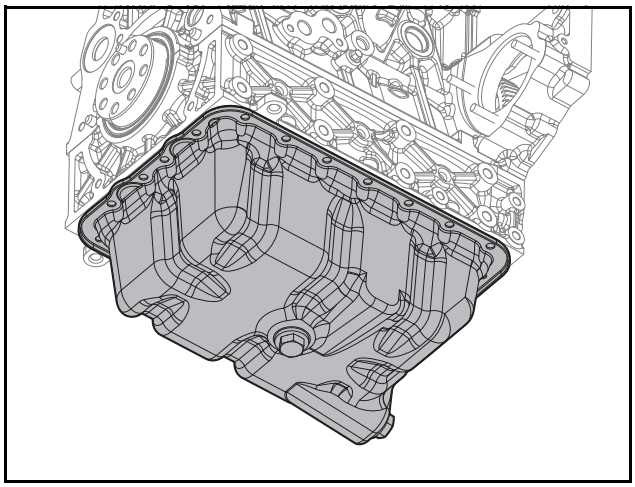

ED1819079

1) Remove the drain plug.
2) Remove the O-ring.
3) Loosen 22 flange hex bolts.
4) Remove the oil pan.

Assembly of Oil Pan

1. Attach the oil pan.

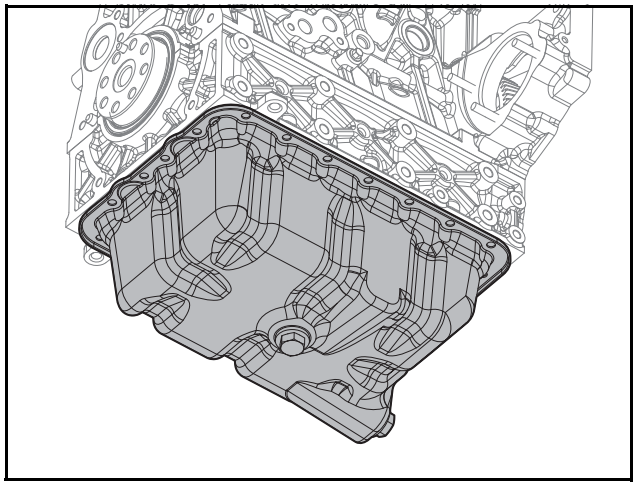

ED1819079

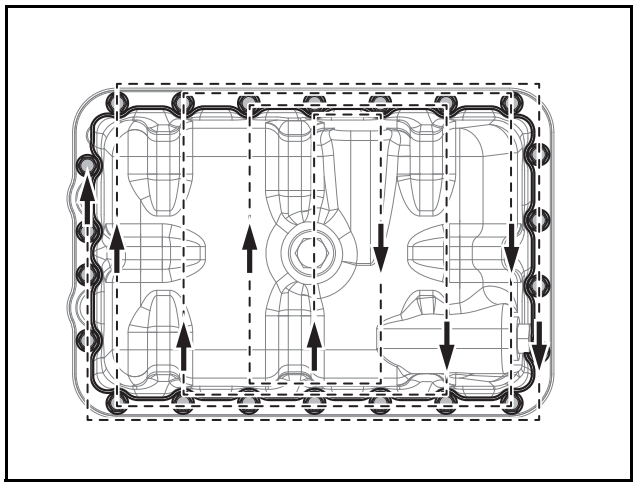

EDM01200127

1) Apply sealant (TB1217H) to the oil pan assembly surface with the diameter of Ø3 ±0.5 mm.

⚠ CAUTION

- **Be careful that the oil pan has been attached in the right direction.**
- **Attach parts within five minutes after applying sealant (TB1217H) onto the parts.**
- **Do not start the engine or load pressure for 25 minutes after applying sealant (TB1217H) onto the parts.**

2) Attach the oil pan.

3) Tighten 22 flange hex bolts at a tightening torque of 2.2 kgf·m.

⚠ CAUTION

Tighten flange hex bolts in the order. The front engine direction is the water pump direction and the rear engine direction is the Drive Plate direction.

4) Mount the O-ring.
5) Connect the drain plug at a tightening torque of 3 kgf·m.

2. Inject the engine oil.

1) Open the oil injection cap on the cylinder head cover top and inject engine oil.

⚠ CAUTION

Use genuine engine oil recommended by Hyundai Doosan Infracore.

Disassembly of Engine Oil Level Gauge and Guide Tube

1. Disconnect oil level gauge and coolant hose.

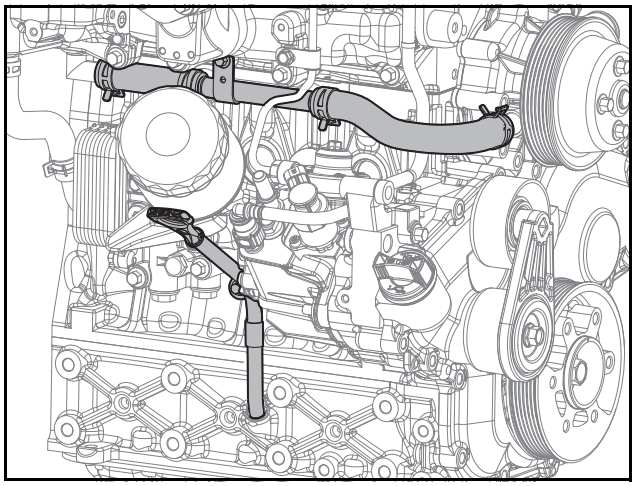

ED1819089

1) Loosen the flange hex bolt.
2) Remove the hose clamp.
3) Disconnect the coolant hose.
4) Remove the oil level gauge.
5) Loosen the flange hex bolt.
6) Disconnect the oil level gauge guide tube.

Assembly of Engine Oil Level Gauge and Guide Tube

1. Mount the oil level gauge and the coolant hose.

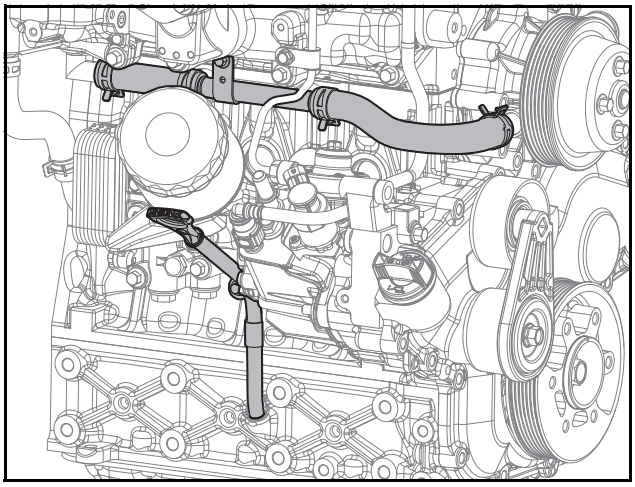

ED1819089

1) Replace the O-ring of the oil level gauge guide tube with a new part.
2) Insert the oil level gauge guide tube in the cylinder block and connect it.
3) Tighten flange hex bolts at a tightening torque of 1.0 kgf·m.
4) Mount the oil level gauge.

⚠ CAUTION

Make the handle of the oil level gauge face the reverse direction from the center of the engine.

5) Connect the coolant hose.
6) Mount the hose clamps.

⚠ CAUTION

Do not use hose clamps more than twice; replace them with new ones.

7) Tighten flange hex bolts at a tightening torque at a tightening torque of 2.2 kgf·m.

8. Fuel system

General information 129
General Information 129
Fuel return hose 130
General Information 130
Disconnection of Fuel Return Hose 130
Connection of Fuel Return Hose 130
Check of Fuel Return Hose 130
Injector 131
General Information 131
How to Operate an Injector 131
Injector Disassembly 132
Injector Assembly 133
Injector Check 135
Common rail 136
General Information 136
Pressure Limit Valve & Rail Pressure Sensor 138
Injection Pipe 140
Common Rail Disassembly 140
Common Rail Assembly 141
Common Rail Check 141
Fuel injection pump 142
General Information 142
Disassembly of Fuel Injection Pump 143
Assembly of Fuel Injection Pump 145

General information

General Information

A diesel engine creates combustion through the compression heat generated by compressing air inhaled into the cylinder and the fuel injected by the fuel injection nozzle.

The high-pressure fuel generated by the high-pressure pump is stored in the common rail. The timing and amount of fuel injection is calculated by the Electronic Control Unit (ECU). The ECU injects fuel by operating the solenoid valve for the injector installed in each cylinder.

Hyundai Doosan Infracore common rail fuel injection system separates the high-pressure apparatus from the fuel injection apparatus. Depending on the conditions of engine operation, the ECU decides fuel volume, fuel injection timing, and pressure for optimum performance and injects fuel in the cylinder.

The common rail fuel injection system consists of the low-pressure level for low-pressure fuel transfer, the high-pressure level for high-pressure fuel transfer, and the ECU.

The fuel tank should be anti-corrosive. No fuel should be leaked from the fuel tank under the doubled operating pressure of the fuel low-pressure pump. The pressure in the tank should not exceed 0.3 bars.

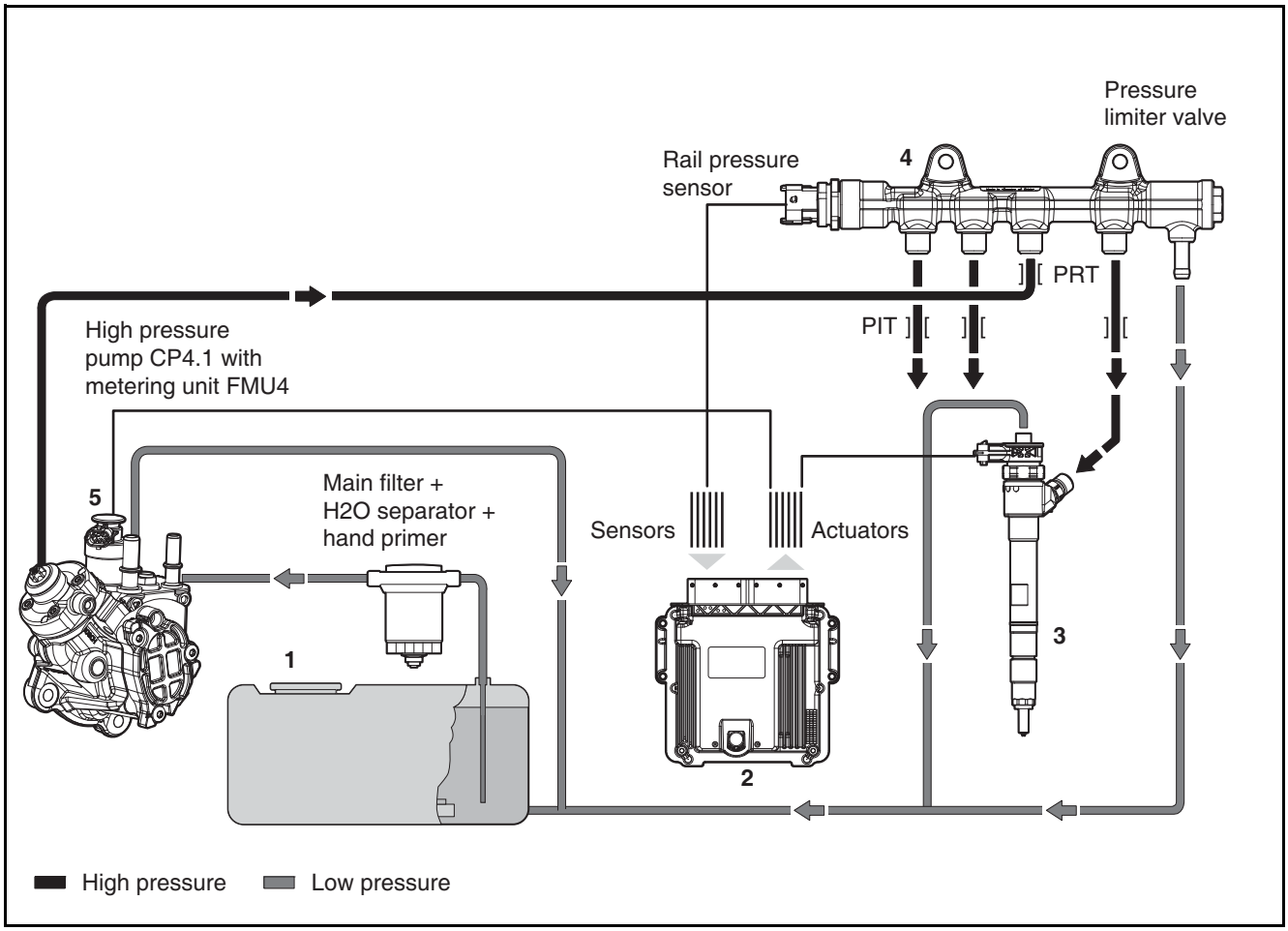

ED18190093

1. Tank with pre-filter
2. Electronic control unit
3. Injector
4. Common rail
5. Fuel injection pump

Fuel return hose

General Information

This hose is to transfer the fuel returned from the injector to the high-pressure pipe back.

Disconnection of Fuel Return Hose

1. Disconnect the fuel return hose.

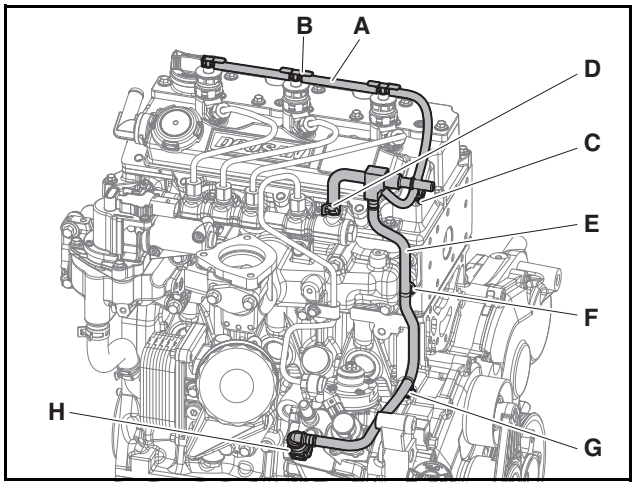

ED18190059

1) Open the adopter (B) of injector return hose (A).
2) Loosen the injector return hose (A).
3) Remove the edge clip (C).
4) Loosen the hose clamp (D).
5) Remove the cable tie (F), (C).
6) Disconnect the quick connector (H).
7) Disassemble the fuel return hose (A) and (E).

Connection of Fuel Return Hose

1. Connect the fuel return hose.

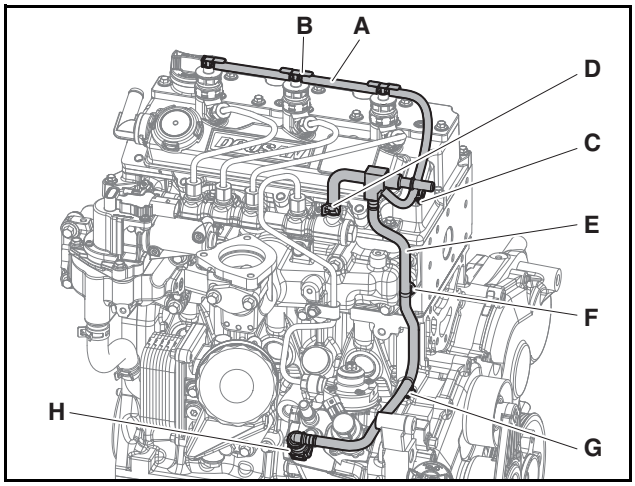

ED18190059

1) Press the fuel return hose into the end of the nipple and connect it.

⚠ CAUTION

- **Be careful to note the direction when connecting the fuel return hose.**
- **The injector should be fully connected with the hose.**
- **Be careful to avoid damage for fuel return hose of injector.**
- **Don't press on the fuel hose, don't drop heavy tool like as spanner on engine, don't step on fuel hose, don't stand on engine.**
- **If the fuel hose are broken by wrong handling, it is possible fire.**

2) Mount 4 hose clips.
3) Mount the hose clips.

⚠ CAUTION

Fix the handle of hose clip to face the front of the engine.

4) Tighten the flange hex bolts.
5) Mount the fixing clips.

Check of Fuel Return Hose

1. Check if there is any foreign substance or damaged part in the inside and the outside of the fuel line.
2. Check if oil is leaked from the joints.
3. Check if the adaptor is damaged and oil is leaked.

Injector

General Information

The injector uses the nozzle to inject fuel to the combustion chamber directly. To control the injection, the solenoid valve is used. Fuel is delivered as much as required from the open injector nozzle and the remaining fuel is returned to the fuel tank through the fuel return line. In addition, the fuel which has been used to lubricate the high-pressure pump and returned from the fuel pressure adjustment valve is returned to the fuel tank through the return line.

The solenoid valve controls the fuel injection timing and amount. The injector works instead of the nozzle and the nozzle holder mounted on the existing engine. Fuel is delivered to the injector through the high-pressure connector mounted on the cylinder head and then delivered to the valve control chamber through the delivery hole.

The valve control chamber is opened by the solenoid valve. It is connected to the fuel return line via the discharge hole. The hydraulic force which has been increased by the valve control plunger with closed discharge hole exceeds the pressure value of the nozzle needle. As a result, fuel delivery to the combustion chamber is blocked by the force given to the contact surface of the nozzle needle.

When the solenoid valve of the injector is pulled, the discharge hole is opened. This lowers the pressure in the control chamber and the hydraulic power given to the plunger. When hydraulic force is lower than the force given to the nozzle needle pressure, the nozzle needle is opened. Finally, fuel is injected to the combustion chamber through the injection nozzle hole.

The reason that the nozzle needle is controlled by hydraulic force is that the power required to open the needle quickly cannot be directly generated from the solenoid valve. Fuel control amount required to open the nozzle needle is added to the fuel amount injected. The used fuel is discharged to the fuel return line through the hole of the valve control chamber.

Fuel loss occurs on the nozzle needle, the valve plunger guide as well as the valve control chamber. The control leakage fuel and the fuel gathered from the line, which connects the over flow valve, the high-pressure pump, and the pressure control valve, is returned to the fuel tank through the fuel return line.

How to Operate an Injector

Injector operation is classified into four operation stages to operate the engine and create pressure in the high-pressure pump.

1. The injector is closed (high fuel pressure state)
2. The injector is open (starting fuel injection).
3. The injector is fully open (injecting fuel).
4. The injector is closed (ending fuel injection). These operation stages are decided by balancing the force given to the injector components. If there is no pressure on the common rail or the engine is stopped, the injector nozzle does not work.

1. The injector is closed (pause state)
   Under the pause state that no power is provided to the solenoid valve of the injector, the injector does not operate. The surface where the discharge hole exists is tightly closed with the valve ball by the force from a valve spring or magnet. High pressure in the common rail is kept by the fuel control valve and the same pressure is generated in the nozzle chamber of the injector. The common rail fuel pressure, which is given to the end face of the valve control chamber of the injector, and the injector nozzle spring force are larger than the force to open the nozzle. Therefore, the injector is closed.
2. The injector is open. (starting fuel injection)
   When power is supplied while the injector solenoid valve is closed, the fuel discharge hole is open by the pulling force of the solenoid valve. Almost simultaneous with that, the high current given to the solenoid valve is reduced to the low current. This is because the air gap of the electromagnet circuit gets smaller. Fuel in the valve control chamber flows to the discharge valve hole on the upper side and then goes into the fuel tank via the fuel return line. The discharge hole completely breaks the pressure balance and lowers the pressure in the valve control chamber. As a result, the pressure in the valve control chamber is lower than the nozzle chamber pressure which has been equal to the common rail pressure. The lowered pressure of the valve control chamber lowers the force from the control plunger. So the nozzle needle is open and fuel injection starts.
3. The injector is fully open. (injecting fuel)
   The valve control plunger is stopped at the upper position because fuel is full as fuel flows from the fuel delivery hole. At this time, the injector nozzle is fully open and fuel is injected to the combustion chamber at the pressure equal to that of the common rail.

4. The injector is closed. (ending fuel injection)
   As soon as the supply to the solenoid vale of the injector is blocked, the valve spring applies force to the armature downward and the valve ball closes the discharge hole. The armature consists of two components. The armature plate is guided by the driving shoulder and pressed downward. However, in this case, an overspring is used. It is a return spring that prevents the force from being applied to the armature and the valve ball. As the discharge hole is closed, fuel is delivered from the delivery hole and generates pressure in the control chamber. This fuel pressure is equal to the pressure of the common rail and puts pressure on the valve control plunger through the end face of the valve control plunger. As a result, the force of the spring is added to the pressure exceeding the pressure of the nozzle chamber. Therefore, the nozzle needle is closed. The speed of closing the nozzle needle is decided by the flow that passes through the delivery hole. As soon as the nozzle needle is positioned to the stop position, fuel injection is blocked.

Injector Disassembly

1. Disconnect the breather hose.

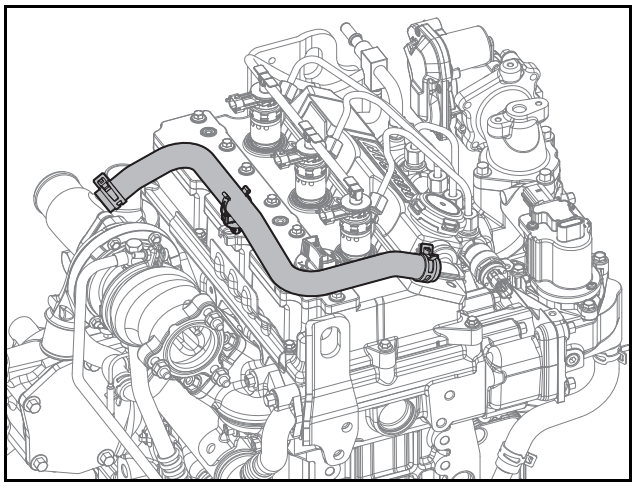

ED18190050

1) Remove the hose clamps.
2) Disconnect the breather hose.

2. Disconnect the fuel return hose.

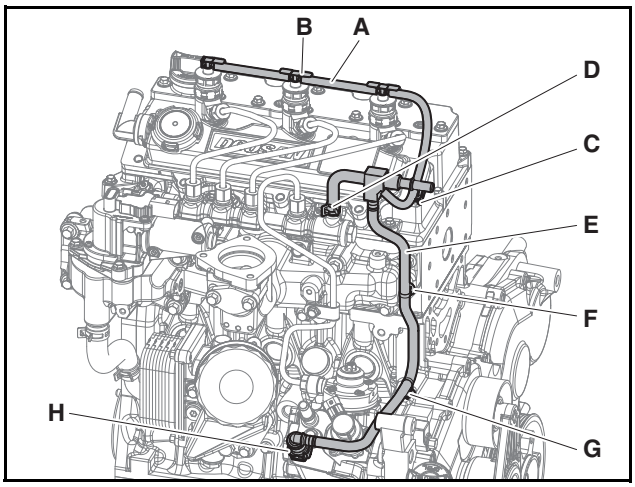

ED18190059

1) Open the adopter (B) of injector return hose (A).
2) Loosen the injector return hose (A).
3) Remove the edge clip (C).
4) Loosen the hose clamp (D).
5) Remove the cable tie (F), (C).
6) Disconnect the quick connector (H).
7) Disassemble the fuel return hose (A) and (E).

3. Disconnect the fuel injection pipes.

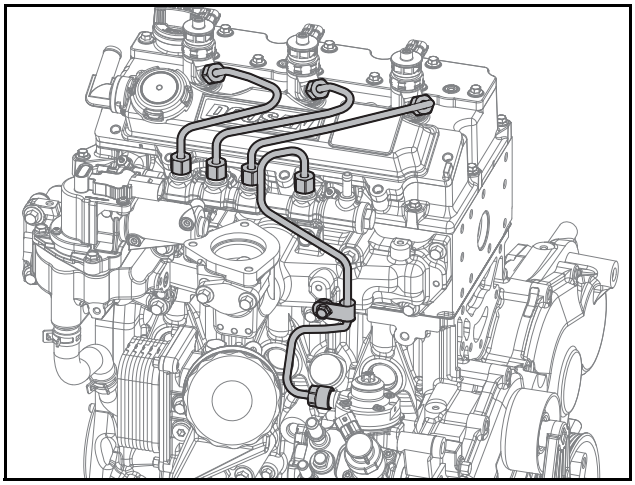

ED18190060

1) Loosen the nuts connected to the injector and the common rail.
2) Disconnect the fuel injection pipes.
3) Loosen the nuts connected to the common rail and the fuel injection pump.

4) Disconnect the fuel injection pipes.

⚠ CAUTION

Do not reuse fuel injection pipes and clamp; replace them with new ones.
If fuel injection pipes and clamp are reused it may allow foreign substances into the fuel pipes or cause oil leaks from bolt clamping and cause a critical fault in engine performance.

4. Remove the right cylinder head cover.

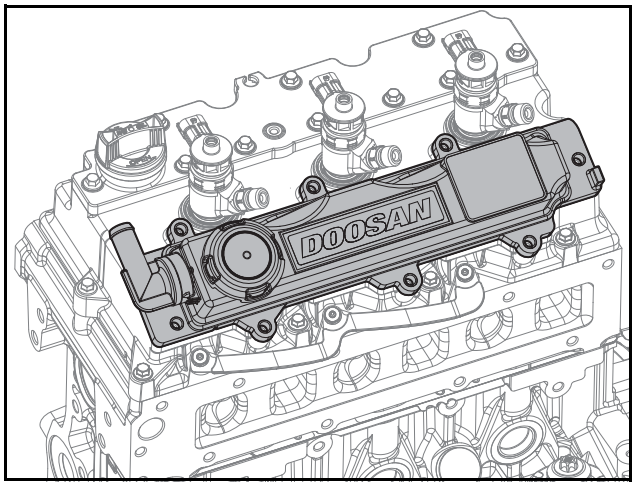

ED18190065

1) Loosen 8 flange hex bolts.
2) Remove the right cylinder head cover.

5. Remove the injector.

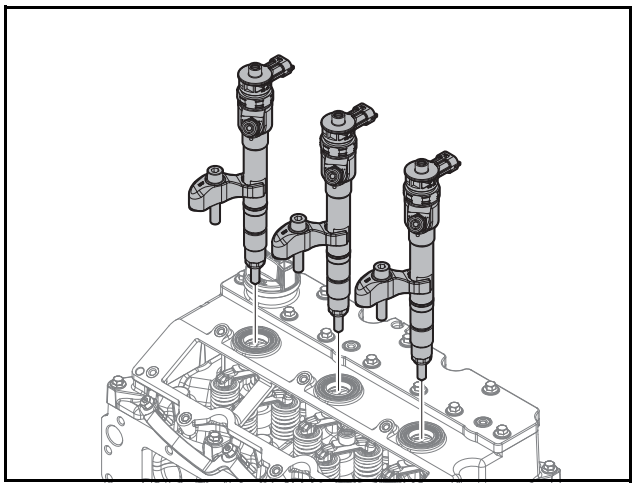

ED18190066

1) Loosen 3 hex bolts.
2) Remove 3 injector fixtures.
3) Remove 3 injectors.

Note) Remove the cylinder head cover and remove the injector seal ring washers.

⚠ CAUTION

- **Be careful not to damage the injector oil seal of the cylinder head cover.**
- **Remove it by turning the injector slowly from left to right.**
- **Do not reuse the injector seal ring washers. Reuse of the injector seal ring washers may cause critical damage to the engine due to unstable combustion.**

Injector Assembly

1. Attach the injectors.

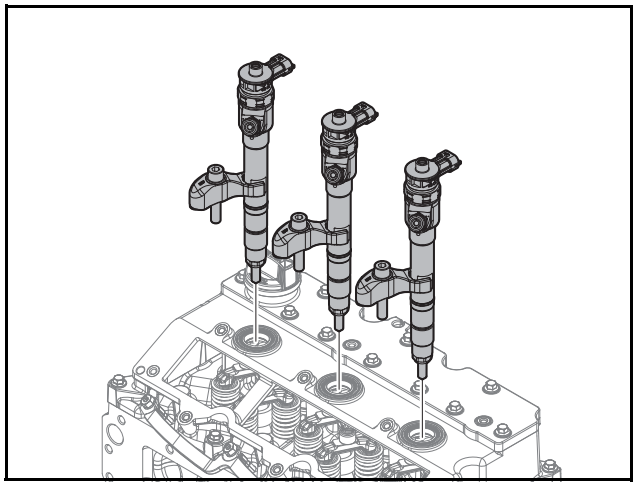

ED18190066

1) Align the injector seal ring washer with the center of the injector hole and mount it.
2) Sufficiently apply engine oil on the cylinder head cover surface where the injectors contact.
3) Attach 3 injectors.

⚠ CAUTION

- **Do not reuse the head cover rubber seal and the injector oil seal but replace with new ones.**
- **Attach injectors by slowly turning them to prevent damage to the cylinder head cover surface which contacts the injectors.**
- **Do not reuse the injector seal ring washers. Otherwise, critical damage to the engine may occur because of unstable combustion.**

4) Mount 3 injector fixtures.

5) Temporarily tighten 3 hex bolts.

⚠ CAUTION

Do not tighten the hex bolts by force when it is difficult to tighten them temporarily. Forced tightening may cause damage to the cylinder head.

6) Tighten 3 hex bolts at a tightening torque of 4.35 ±0.35 kgf·m.

2. Attach the right cylinder head cover.

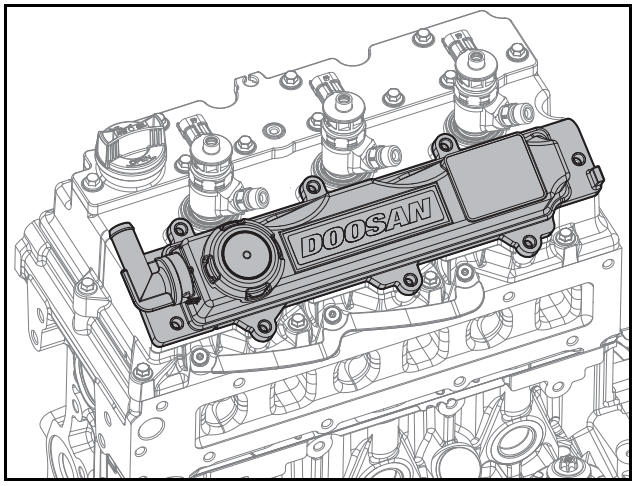

ED18190065

1) Align the right cylinder head cover with the assembly pin hole and attach it.
2) Temporarily tighten 8 flange hex bolts in the order.
3) Tighten 8 flange hex bolts at a tightening torque of 1 ±0.1 kgf·m.

3. Connect the fuel injection pipes.

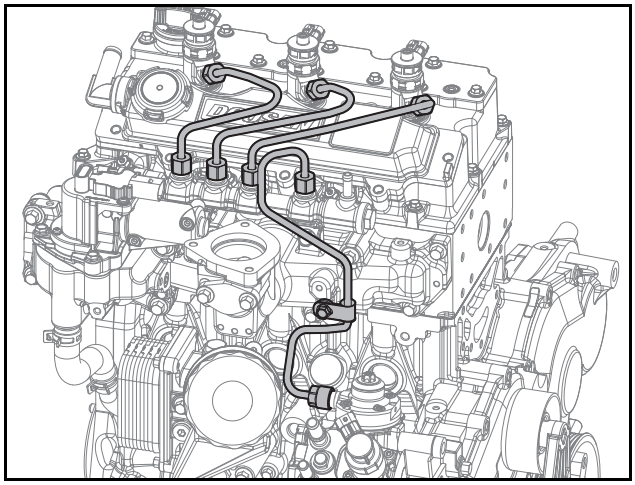

ED18190060

1) Loosen 2 hex bolts of the common rail.
2) Temporarily connect the fuel injection pipes by hand.

⚠ CAUTION

- **Do not bend the fuel injection pipes by force.**
- **Be careful to note the direction when connecting the fuel injection pipes.**
- **Assemble the nut on one side of the fuel injection pipe first, and then the nut on the other side to connect the round part of the pipe to the correspondent part correctly.**
- **Do not reuse fuel injection pipes and clamp; replace them with new ones. Reusing fuel injection pipes and clamp may allow foreign substances into the fuel pipes or oil leaks from the bolt clamping to occur, causing a critical fault in engine performance.**

3) Tighten 2 hex bolts of the common rail at a tightening torque of 2.2 kgf·m.
4) Tighten the nuts of the fuel injection pipe, which are connected to the common rail and the injector, at a tightening torque of 3.0 kgf·m.
5) Tighten the nuts of the fuel injection pipe, which are connected to the common rail and the fuel injection pump, at a tightening torque of 3.0 kgf·m.

4. Connect the fuel return hose.

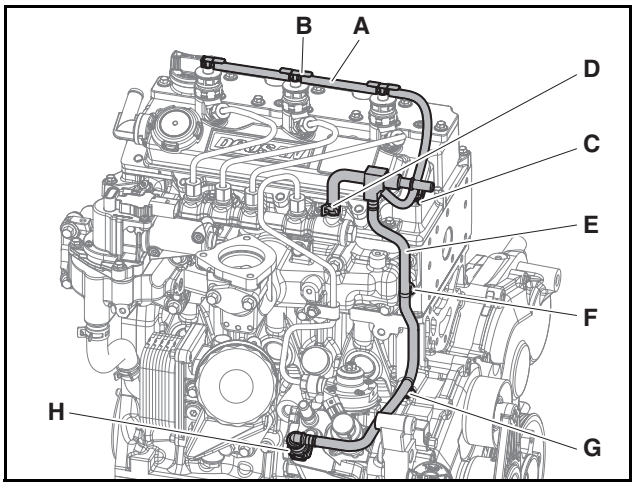

ED18190059

1) Press the fuel return hose into the end of the nipple and connect it.

⚠ CAUTION

- **Be careful to note the direction when connecting the fuel return hose.**
- **The injector should be fully connected with the hose.**
- **Be careful to avoid damage for fuel return hose of injector.**
- **Don't press on the fuel hose, don't drop heavy tool like as spanner on engine, don't step on fuel hose, don't stand on engine.**
- **If the fuel hose are broken by wrong handling, it is possible fire.**

2) Mount 4 hose clips.
3) Mount the hose clips.

⚠ CAUTION

Fix the handle of hose clip to face the front of the engine.

4) Tighten the flange hex bolts.
5) Mount the fixing clips.

5. Connect the breather hose.

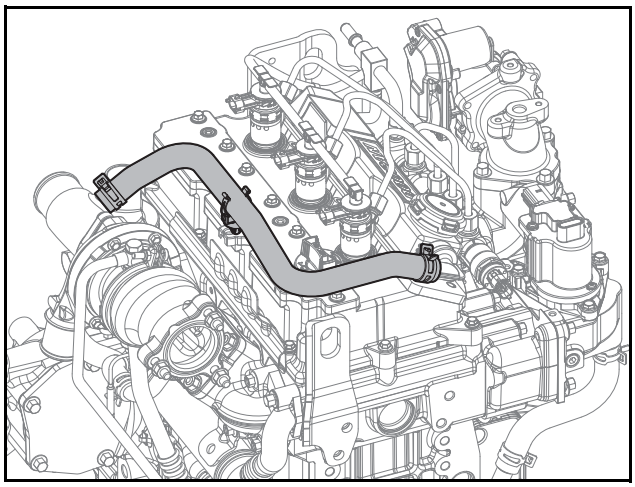

ED18190050

1) Connect the breather hose.
2) Mount the hose clamps.

⚠ CAUTION

Do not reuse the clamp if it has permanent deformation by irregular shape.

Injector Check

1. Check if there are any foreign substances and if the end part of the injector is transformed.
2. Check the injector protrusion (C).

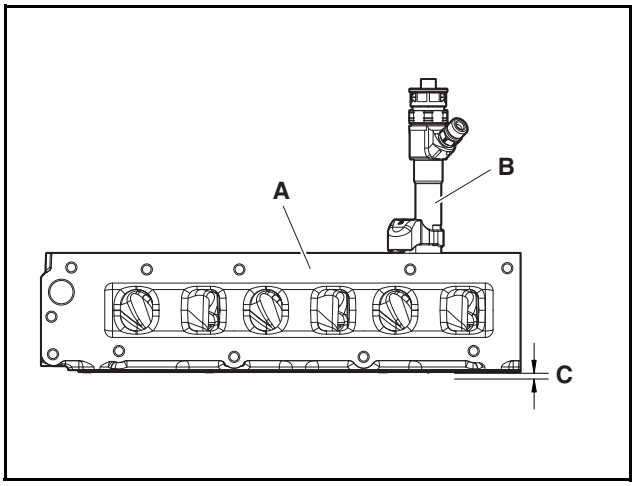

ED18190024

1) Detach the cylinder head (A).

Note) Detach the cylinder head by referring to engine disassembly order in Chapter 5.

2) Insert the seal ring in the cylinder head (A) and attach the injector (B).
3) Check the injector protrusion (C) based on the cylinder head (A) surface with a dial gauge.

Note) Be careful not to allow foreign substances to flow into the injector and the high-pressure connector when detaching and checking the injector.

Item	Specified Value
Injector protrusion	1.88 ±0.35 mm

Common rail

General Information

Hyundai Doosan Infracore common rail fuel injection system separates the high-pressure apparatus from the fuel injection apparatus. The ECU decides the fuel amount and the fuel injection timing and pressure for the optimum performance and injects fuel in the cylinder.

The high-pressure fuel generated from the fuel high-pressure pump is stored in the common rail. When a driver operates the vehicle, fuel injection timing and optimum fuel amount are decided based on the data set in the Electronic Control Unit (ECU) and the solenoid valve of the injector installed in each engine cylinder is operated to inject fuel into the cylinder.

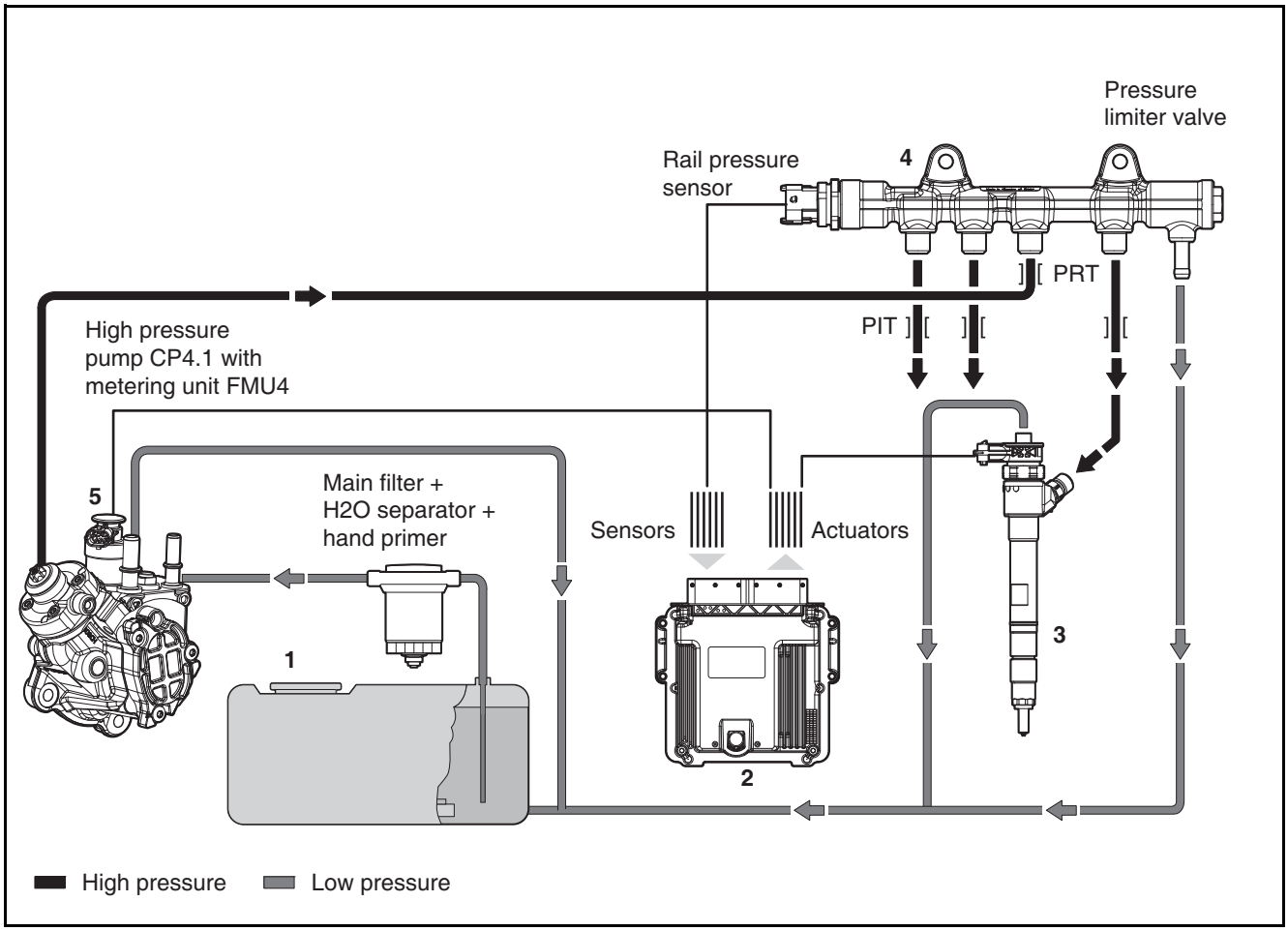

ED18190093

1. Tank with pre-filter
2. Electronic control unit
3. Injector
4. Common rail
5. Fuel injection pump

Main components of the common rail fuel injection system are as follows.

1. Electronic Control Unit (ECU)

1) The Electronic Control Unit (ECU) receives the input signals generated by the above input sensors based on the driver's accelerator operation and works immediately according to the driving performance of the engine and the vehicle. In addition, based on the above information, the ECU generates open/close circuit - circulation circuit operations of the vehicle and engine.

2) The engine speed is measured by the crankshaft RPM sensor and the ignition order is determined by the camshaft RPM sensor. Through electrical signals generated by the potentiometer of the accelerator pedal sensor, shows how strong the driver has pressed the pedal. In addition, the ECU includes the turbocharger and the intake pressure sensor. The intake pressure sensor measures the intake pressure.

3) When it is very cold or the engine is cooled, the ECU receives data from the coolant temperature sensor and the air temperature sensor to operate with the best conditions for engine operation.

2. Crankshaft RPM sensor
1) Position of the piston in the combustion chamber is very important. Pistons of all engines are connected to the crankshaft via the connecting rods. The crankshaft RPM sensor installed in the Drive Plate housing provides information on the position of all pistons. The rev-speed is defined as Revolutions per Minute (RPM) of the crankshaft. The key input parameters are calculated by the ECU by using the signals received from the crankshaft RPM sensor.
3. Camshaft RPM sensor
1) The camshaft RPM sensor controls the intake and exhaust valve of the engine. It revolves at the half of the crankshaft speed and determines whether the camshaft position is at the compression stage or the exhaust stage when the piston is moving toward the top dead point. This information cannot be determined by the crankshaft RPM sensor. However, while the engine is normally operating, the information given by the crankshaft RPM sensor is enough to define the engine state. It means that the ECU receives information of the engine from the crankshaft RPM sensor if the camshaft RPM sensor cannot sense the engine state while the vehicle is running.
4. Accelerator pedal sensor
1) The accelerator pedal sensor sends the data generated when a driver presses the accelerator pedal to the ECU. The voltage value is generated by the potentiometer in the accelerator pedal sensor. The pedal position is calculated with the programmed characteristics curves.
5. Fuel temperature sensor
1) This sensor measures the fuel temperature in the fuel pump.
6. Boost pressure and temperature sensor
1) The boost pressure and temperature sensor is connected to the intake stake via the O-ring. It measures the absolute pressure and temperature in the intake stake.
2) The output signal is input to the ECU and the boost pressure is calculated based on the ECU-programmed characteristics curves.
7. Oil pressure sensor
1) The engine oil pressure sensor senses the pressure of engine oil and sends the data to the ECU.
8. Common rail pressure sensor
1) It is installed at the end of the common rail, measuring the instantaneous internal pressure of the common rail.
9. Engine coolant temperature sensor
1) The engine coolant temperature sensor perceives the temperature of the engine coolant sends the data to the ECU.

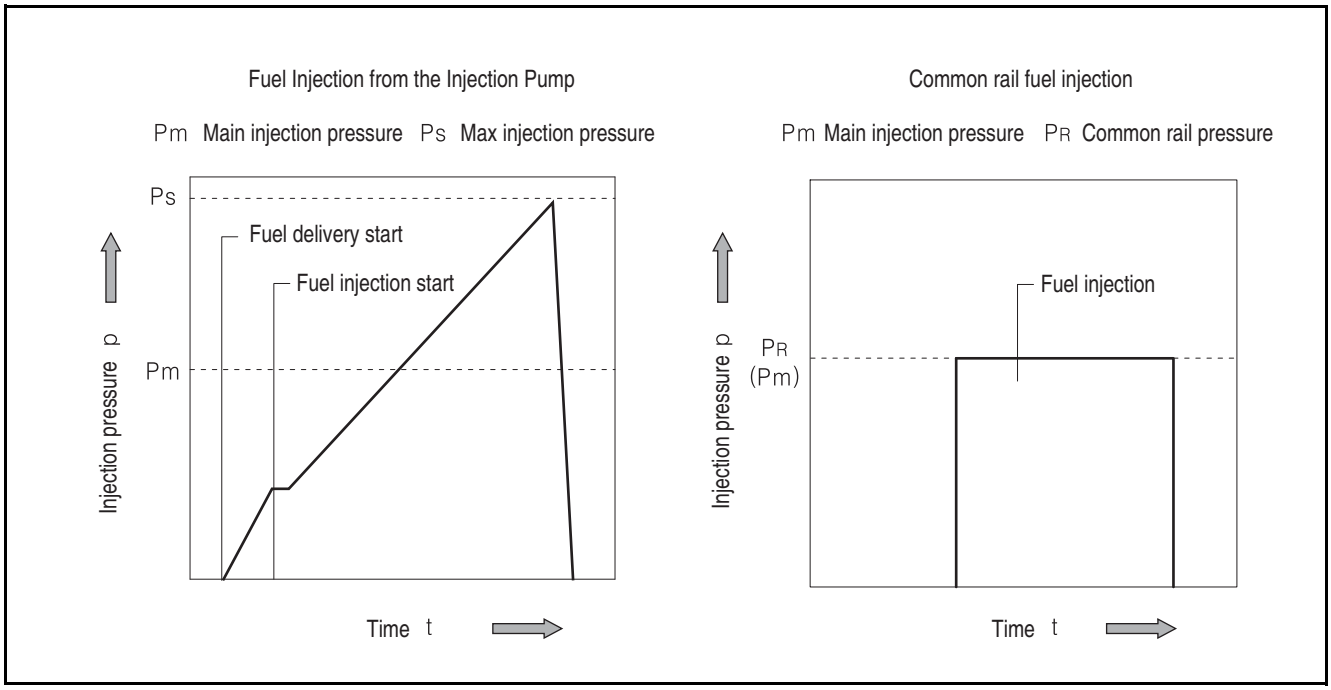

EDL0213004A

The injection characteristics of the common rail are as follows.

1. Comparing to the existing injection characteristics, the common rail requires the ideal fuel injection as follows. The fuel injection amount and the injection pressure work independently from each other, satisfying conditions for all engines.
2. It should be available to adjust the injection amount to low for the ignition delay time, i.e., the period from starting fuel injection to starting combustion at the early stage of fuel injection.
3. The common rail system is a modulized system. Generally, the following components take key roles of the injection characteristics.

1) Injector solenoid valve installed on the cylinder head
2) Common rail
3) Fuel high-pressure pump
4) Electronic Control Unit (ECU)
5) Crankshaft RPM sensor

Pressure Limit Valve & Rail Pressure Sensor

Safety Regulations

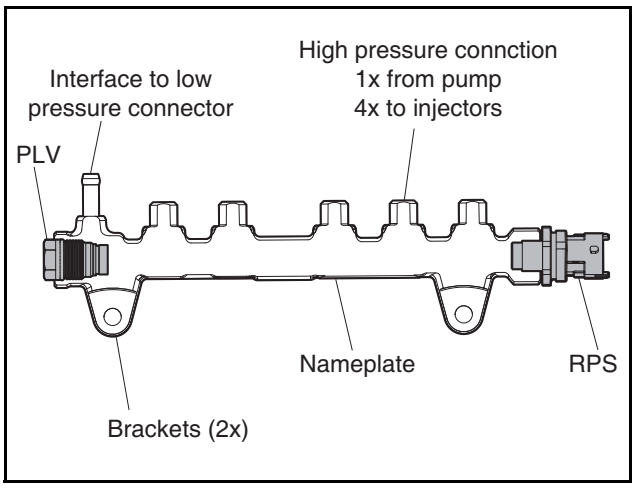

EDM02200090

Before working on the common rail high pressure fuel system, a minimum waiting time of 30second after engine shut-down is mandatory.
Any work at the common rail high pressure fuel system (rail, function-block, pressure control valve, pressure limiting valve, rail pressure sensor, pipe connection, high pressure pipes (pump/rail or /function block, function block/rail, rail/injectors)) is not permitted when the engine is running.

⚠ CAUTION

- **Cutting fuel jets: injury-risk at eyes and skin.**
- **When opening the high pressure fuel system, fuel jets can ignite on hot engine surfaces.**

The first high pressure component has to loosened slowly, so that the pressure inside the fuel system can adjust to ambient pressure.

Pressure Limit Valve (PLV)

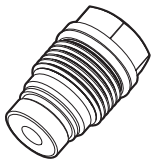	Internal Bite edge ø12.6 mm M20x1.5

Disassembly

1. Clean interface area of PLV using proper degrease materials and compressed air for drying.
2. Loosen the PLV using a commercial wrench (WAF dependent on PLV) and unscrew manually.
3. If PLV is used with a gasket remove the gasket with proper tools.

4. Clean the thread and sealing surface of the rail.
5. Close the rail orifice using a plastic cap after removing the PLV. (to protect the high pressure system from dust and dirty)
6. If the PLV will be reused, remove the sealing ring carefully.

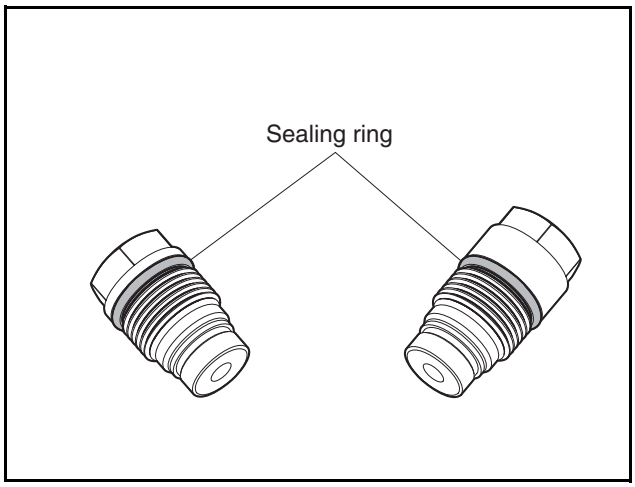

EDM02200092

Preparation for Assembly

1. Interface inspection
   Inspect thread and sealing surfaces of the PLV and the rail concerning any damage.
   Only concentric grooves are allowed. No cuts in radial direction are tolerable.
   The sealing ring has to be replaced.

Assembly

1. Remove the plastic cap from the rail orifice
2. Screw in the PLV manually
3. Tighten the PLV using a commercial torque-wrench according to table.

Tightening torque	100 ±5 N·m

Rail Pressure Sensor (RPS)

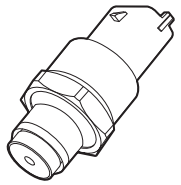	Big bite edge M18x1.5

Disassembly

1. Clean interface area of RPS using proper degrease materials and compressed air for drying.

Note) Clean material must not penetrate the electric connector!

2. Unplug electric connector.
3. Loosen the RPS using commercial wrench and unscrew manually.
4. If RPS is used with a gasket remove the gasket with proper tools.
5. Clean the thread and sealing surface of the rail
6. Close the rail orifice using a plastic cap after removing the RPS to prevent contamination.
7. Not all RPS types are sufficiently protected against electrical discharge (ESD).
8. Don't touch the connector pins of the RPS with bare hands.

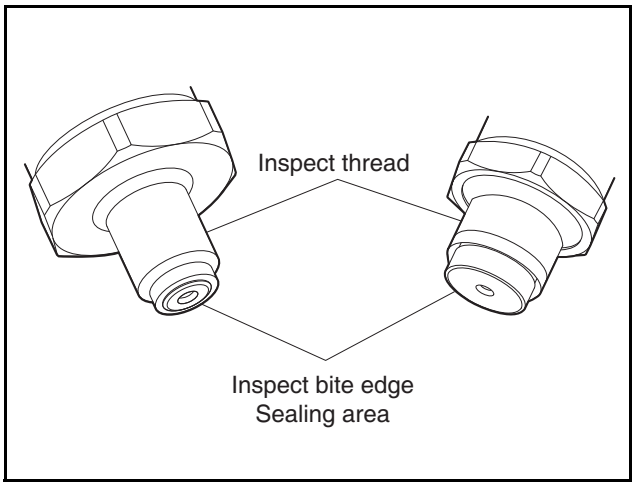

EDM02200093

Preparation for Assembly

Inspect thread and sealing surfaces of the RPS and the rail concerning any damage.
Only concentric grooves are allowed. No cuts in radial direction are tolerable.

Assembly

1. Screw in the RPS manually.
2. Tighten the RPS using a commercial torque-wrench according to table.

Note) The electric cable must not be under tension.

Tightening torque	100 ±5 N·m

Injection Pipe

1. Fuel high-pressure pipe

1) The fuel high-pressure pipe transfers high-pressured fuel of 1,800 bar. Therefore, special materials are used for fuel line to stand the maximum pressure of the system and the high-pressure changes which are generated while fuel is injected. The high-pressure pipe uses both the external diameter of Ø6.35 and the bore of Ø3.0. In addition, the length of the fuel high-pressure pipes between the common rail and the injector should be identical and installed as short as possible.

2. Common rail

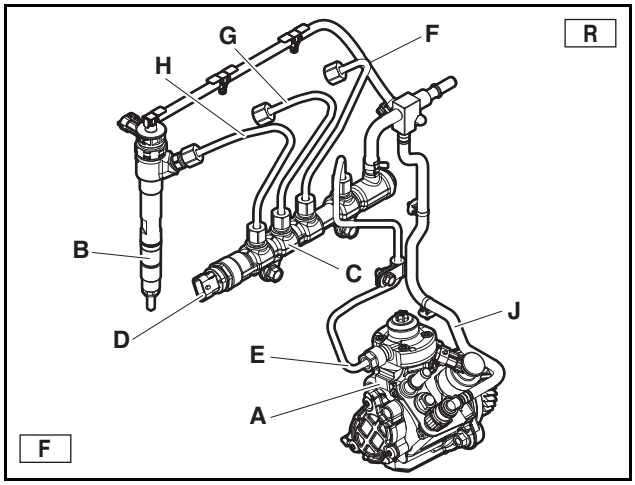

ED18190041

A.	Fuel injection pump	F.	Fuel injection pipe for injector #1
B	Injector	G.	Fuel injection pipe for injector #2
C	Common rail	H.	Fuel injection pipe for injector #3
D.	Pressure sensor	I.	Fuel injection pipe for injector #4
E.	Fuel supply fuel injection pipe	J.	Fuel return hose

Note) The front engine direction (F) is the water pump direction and the rear engine direction (R) is the Drive Plate direction.

1) After the injector has used fuel from the common rail for fuel injection, the pressure in the common rail is actually kept consistently. The fuel pressure is measured by the common rail pressure sensor and kept as a desired value by the pressure adjustment valve. The pressure control valve controls the fuel pressure up to 1,800 bar in the common rail.

2) The common rail stores the fuel pumped from the high-pressure fuel pump at the high pressure. After the injector has used fuel from the common rail for fuel injection, the pressure pulsation in the common rail is actually kept consistently because of the volume of the common rail. The fuel pressure is measured by the common rail pressure sensor and kept as a desired value by the pressure adjustment valve. The pressure control valve controls the fuel pressure up to 1,800 bar in the common rail.

3) Hyundai Doosan Infracore common rail fuel injection system separates the high-pressure apparatus from the fuel injection apparatus. The ECU decides the fuel amount and the fuel injection timing and pressure for the optimum performance and injects fuel in the cylinder.

Common Rail Disassembly

1. Disconnect the fuel injection pipes.

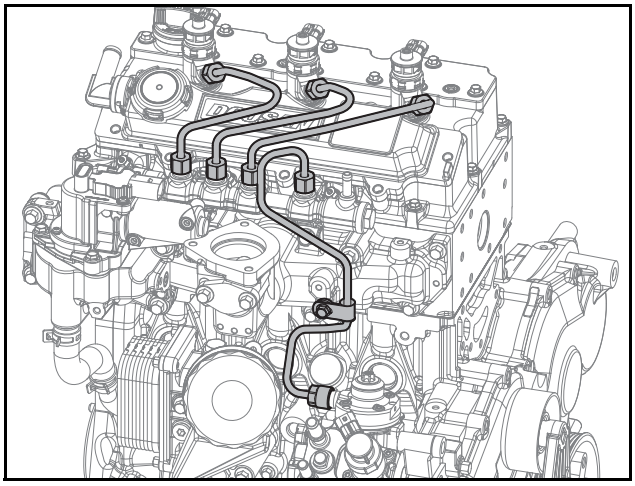

ED18190060

1) Loosen the nuts connected to the injector and the common rail.
2) Disconnect the fuel injection pipes.
3) Loosen the nuts connected to the common rail and the fuel injection pump.
4) Disconnect the fuel injection pipes.

⚠ CAUTION

Do not reuse fuel injection pipes and clamp; replace them with new ones.
If fuel injection pipes and clamp are reused it may allow foreign substances into the fuel pipes or cause oil leaks from bolt clamping and cause a critical fault in engine performance.

2. Detach the common rail.

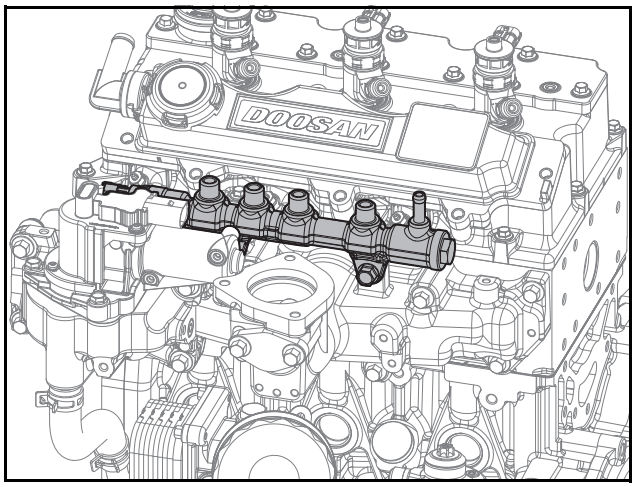

ED18190061

1) Loosen 2 hex bolts.
2) Remove the common rail from the intake manifold.

Common Rail Assembly

1. Attach the common rail.

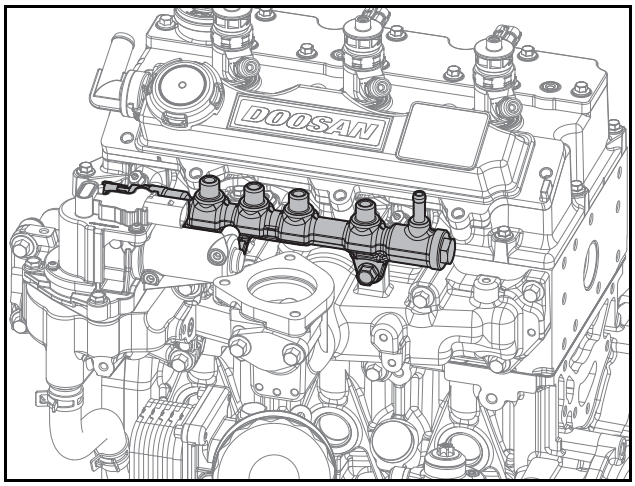

ED18190061

1) Attach the common rail to the intake manifold.

⚠ CAUTION

- **Be careful to note the direction when attaching the common rail.**
- **Be careful not to damage the common rail while attaching it.**

2) Temporarily tighten 2 hex bolts by hand.
3) Tighten 2 hex bolts at a tightening torque of 2.2 kgf·m.

2. Connect the fuel injection pipes.

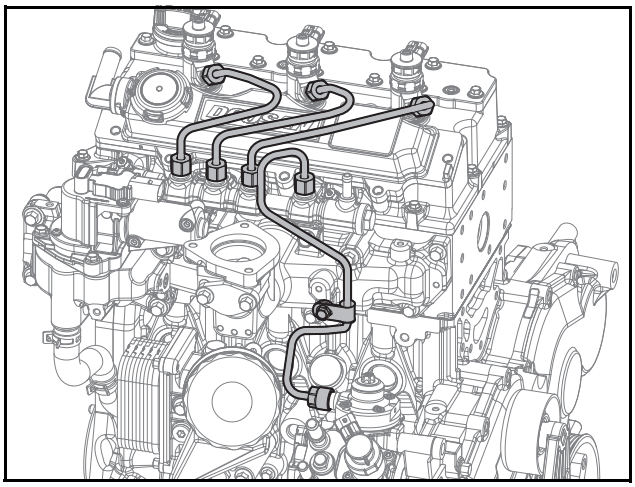

ED18190060

1) Loosen 2 hex bolts of the common rail.
2) Temporarily connect the fuel injection pipes by hand.

⚠ CAUTION

- **Do not bend the fuel injection pipes by force.**
- **Be careful to note the direction when connecting the fuel injection pipes.**
- **Assemble the nut on one side of the fuel injection pipe first, and then the nut on the other side to connect the round part of the pipe to the correspondent part correctly.**
- **Do not reuse fuel injection pipes and clamp; replace them with new ones. Reusing fuel injection pipes and clamp may allow foreign substances into the fuel pipes or oil leaks from the bolt clamping to occur, causing a critical fault in engine performance.**

3) Tighten 2 hex bolts of the common rail at a tightening torque of 2.2 kgf·m.
4) Tighten the nuts of the fuel injection pipe, which are connected to the common rail and the injector, at a tightening torque of 3.0 kgf·m.
5) Tighten the nuts of the fuel injection pipe, which are connected to the common rail and the fuel injection pump, at a tightening torque of 3.0 kgf·m.

Common Rail Check

1. Check if there is any damage on the exterior of the common rail.
2. Check whether there is any damage of the pressure sensor of the common rail.
3. Check if there is any damage of the fuel pressure restrict valve.

Fuel injection pump

General Information

Fuel high-pressure pump uses a radial piston pump to generate high pressure in fuel. Pressure is independently generated as fuel is injected. The RPM of the fuel high-pressure pump is directly connected to the engine rotation speed regardless of the rotation ratio of the transmission.
Comparing to the existing injection system, the common rail injection system shows the consistent fuel delivery amount.
The injector is connected to the common rail with the high-pressure pipe. It consists of a nozzle and a solenoid valve. When a key switch is operated, actuating power is supplied to the solenoid valve by the ECU. When the key switch is blocked, the solenoid valve ends injection.

Solenoid valve switching (open/close) is operated by high pressure and high current. Based on the values set in the ECU, the solenoid valve of the injector is sequentially operated. The crankshaft sensor and the camshaft sensor use to detect the engine rev count for starting fuel injection and adjusting the injection timing.
The fuel high pressure pump pressurizes fuel at the pressure of 1,800 bar and the pressurized fuel is delivered to the common rail through the high-pressure line.
The fuel high-pressure pump consists of the following components.

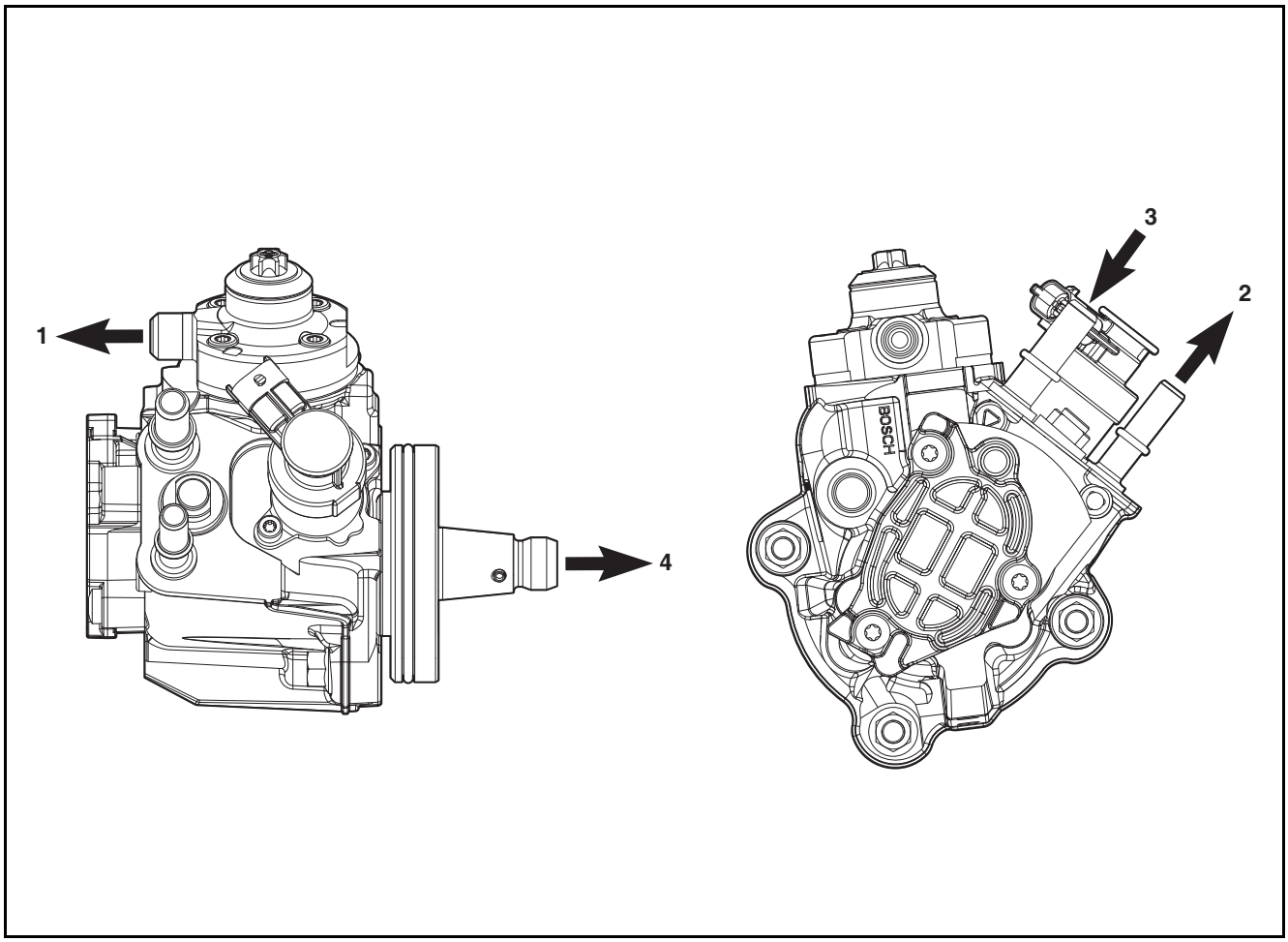

ED24190080

1. High pressure fuel line outlet
2. Low pressure fuel line outlet
3. Low pressure fuel line inlet
4. Drive shaft

1. Functions

1) The fuel high pressure pump has two pressure phase processes: low-pressure phase and high-pressure phase. Under all operating conditions, it transfers high-pressure fuel in a vehicle for the entire service life-time. In addition, it delivers fuel required to respond to the rapidly-changing pressure in the common rail or quick start of a vehicle. The fuel high pressure pump continuously generates the system pressure necessary for the common rail.

2. Operation method

1) The fuel delivery pump delivers fuel from the fuel tank to the fuel high pressure pump through the fuel inlet and the safety valve. Then the fuel high pressure pump pumps and the transfers the fuel to the lubricating and cooling circuit of the high pressure pump through the safety valve. The driving shaft, which has the eccentric cam, moves the pump piston up and down according to the cam shape.

2) When the transfer pressure of the fuel delivery pump exceeds the open pressure of the safety valve, the fuel is transferred to the intake stroke position of the pumping chamber where the pump piston moves up and down through the intake valve of the fuel high pressure pump. When the pump piston exceeds the bottom dead point, the valve inlet is closed and fuel cannot be transferred from the pumping chamber. So the fuel is compressed over the delivered pressure.

3) As soon as the fuel pressure reaches the common rail pressure, the outlet valve is opened. Then the compressed fuel flows into the high pressure circuit. The pump piston continuously transfers fuel until it reaches the bottom dead point. After the bottom dead point is reached, the outlet valve is closed. The fuel in the pumping chamber is relaxed and then the pump piston moves down again. When the pressure in the pumping chamber is lower than the pressure of the fuel delivery pump, the inlet valve is opened again and the above procedure is started again.

3. Fuel supply collection

1) The fuel high pressure pump is designed to deliver a lot of fuel. While the engine runs at idle or partial load, the fuel excessively delivered returns to the fuel tank through the pressure adjustment valve.

Disassembly of Fuel Injection Pump

1. Remove the V-belt.

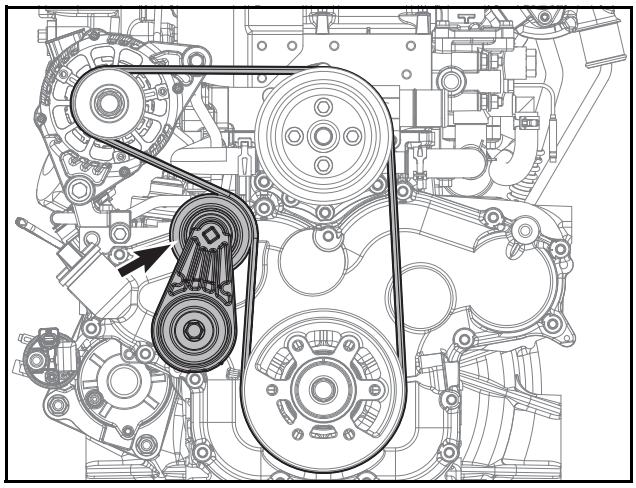

ED18190044

1) Turn the auto tensioner counterclockwise by using a quadrangular groove at the top of the auto tensioner pulley (Use a 10 mm x 10 mm quadrangular tool).

2) Remove the belt wound around the auto tensioner pulley by using a space generated by the rotation of the auto tensioner.

2. Remove the crankshaft pulley.

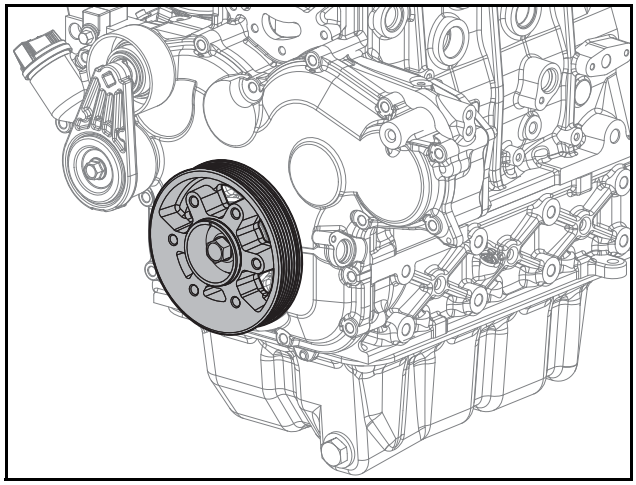

ED1819074

1) Loosen the flange hex bolt.

2) Remove the crankshaft pulley.

⚠ CAUTION

Be careful not to damage the oil seal.

3. Remove the timing gear case.

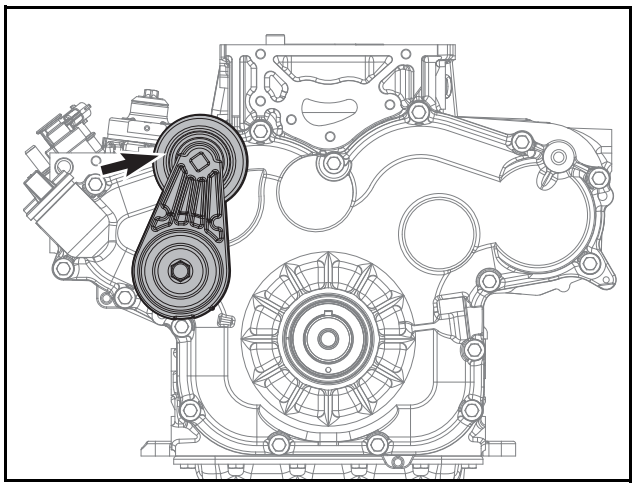

ED24190138

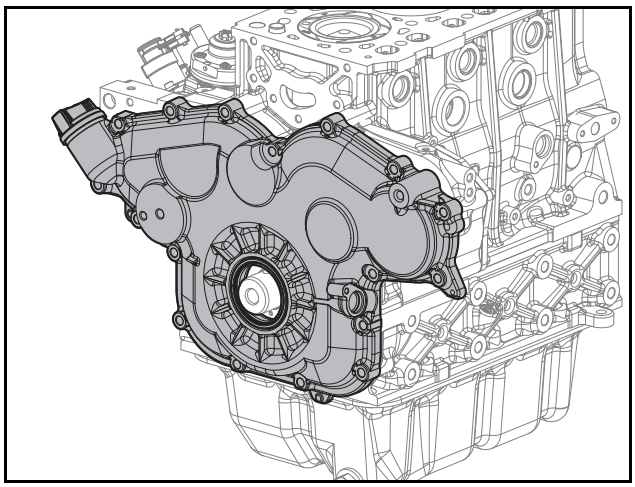

ED1819076

1) Loosen the flange hex bolt and remove the auto tensioner.
2) Loosen the fixing bolt and remove the crank speed sensor.
3) Loosen 16 hex bolts.
4) Remove the timing gear case.

⚠ CAUTION

Do not reuse the oil seal; replace them with new ones.

4. Remove the timing wheel.

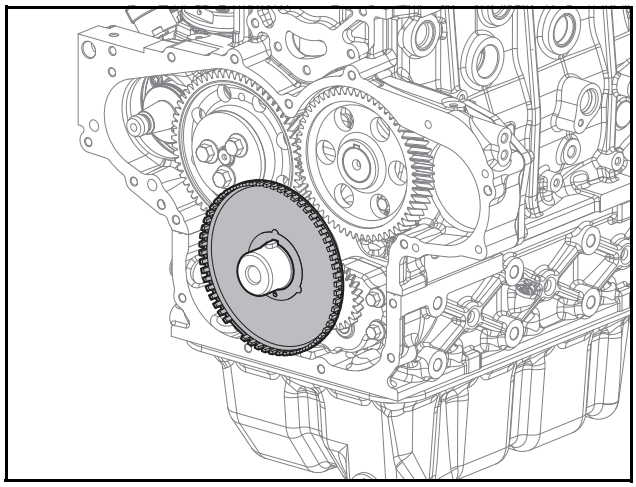

ED1819077

1) Remove the timing wheel.

5. Remove the fuel injection pump.

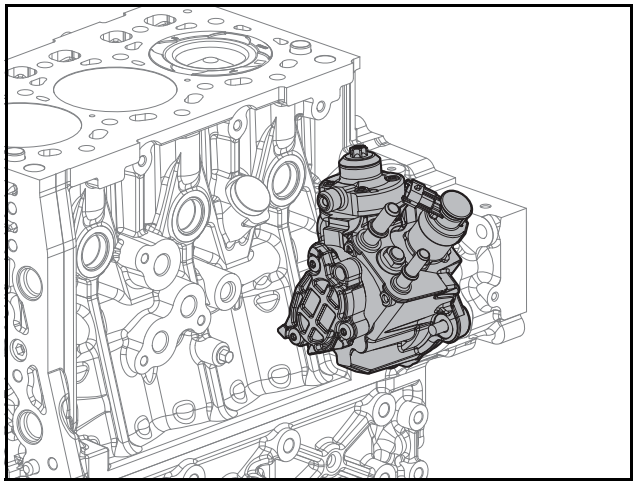

ED1819078

1) Loosen 3 flange hex nuts.
2) Remove the fuel injection pump.
3) Loosen the flange hex nut.
4) Remove the collar.
5) Remove the O-ring from the collar.

⚠ CAUTION

Do not reuse the O-ring; replace with a new one. Reuse of the O-ring may cause critical damage to engine performance to occur.

Assembly of Fuel Injection Pump

1. Attach the fuel injection pump.

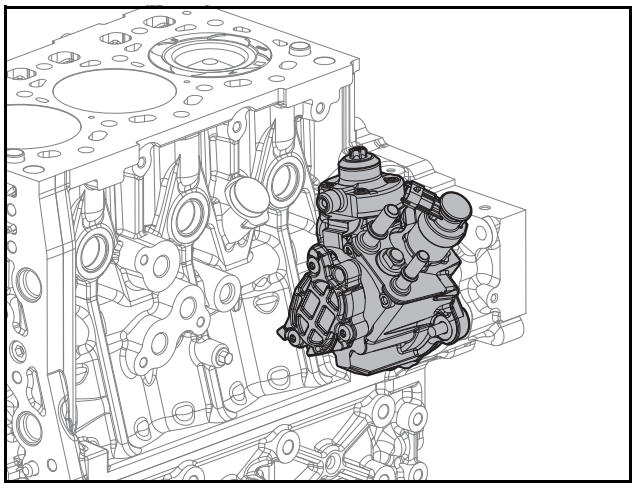

ED1819078

1) Mount the O-ring to the collar.
2) Mount the collar.

⚠ CAUTION

- **Ensure that you are attaching the injection pump drive gear so that its engraving faces the outside of the cylinder block.**
- **Ensure that the pin direction is the opposite direction of the idle gear.**

3) Tighten the flange hex nuts at a tightening torque of 8.2 ±0.5 kgf·m.
4) Attach the fuel injection pump.
5) Position the idle gear engraving between the injection pump drive gear engravings.

Note) You can see two injection pump drive gear engravings and one idle gear engraving.

⚠ CAUTION

- **Ensure that the idle gear engraving is positioned between the two injection pump drive gear engravings.**
- **Align the injection pump drive gear engravings, the idle gear engraving, and the pin of the fuel injection pump shaft before attaching them.**

6) The backlash between the fuel injection pump and the idle gear is 0.087 ~ 0.200 mm.

Item	Specified Value
Backlash between the fuel injection pump and the idle gear	0.087 ~ 0.200 mm

7) Tighten 3 flange hex nuts at a tightening torque of 2.2 kgf·m.

2. Attach the timing wheel.

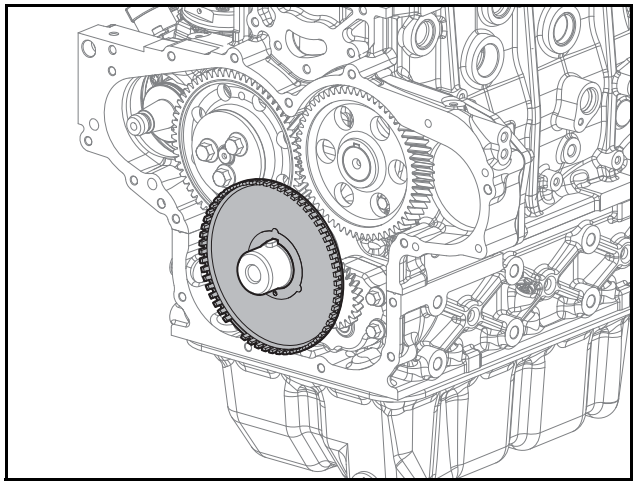

ED1819077

1) Align the timing wheel to the pin and attach it to the crankshaft gear surface.

⚠ CAUTION

Be careful not to damage the teeth of the timing wheel.

3. Attach the timing gear case.

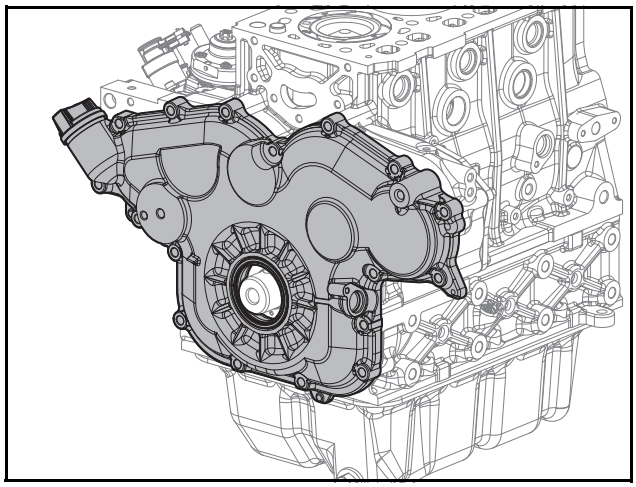

ED1819076

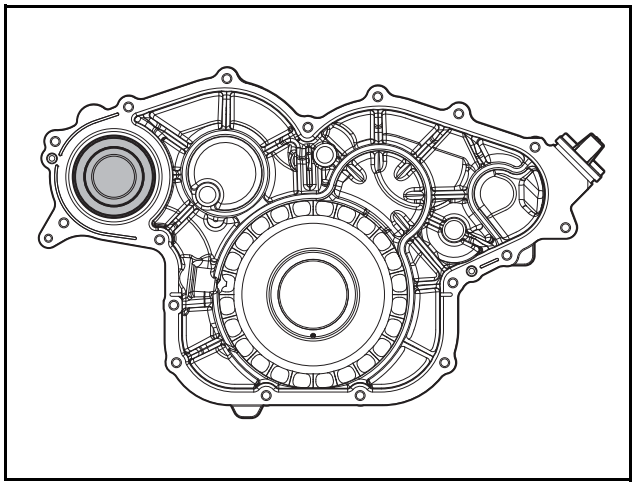

EDM02200047

Note) Apply as follows and use TB1217H equivalent product.

Note) Apply to the surface of TGC cover with ø2.5 ±0.5 mm thickness.

Note) The PTO bearing is included in the timing gear case. Hence, in the event of a bearing defect, replace the entire TGCC (Timing Gear Case Cover) assembly.

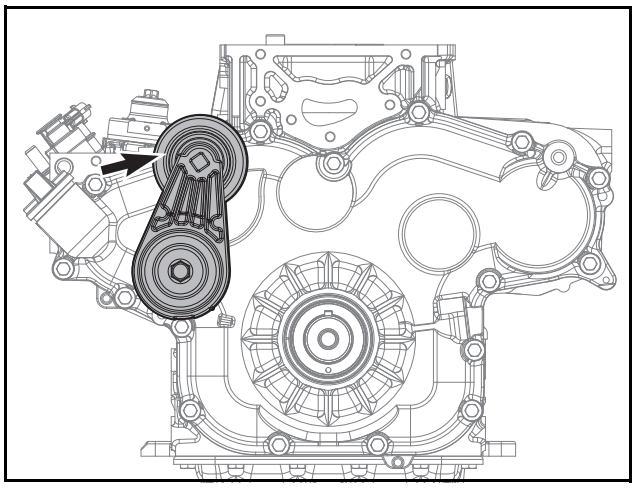

ED24190138

1) Make the assembly surface of the timing gear case face the ground.
2) Mount the front oil seal to the front oil seal assembly jig.
3) Align the front oil seal assembly jig where the front oil seal is mounted to the timing gear case and beat it with a rubber hammer.
4) when the front oil seal is inserted to the timing gear case, pull off the front oil seal assembly jig.

⚠ CAUTION

- **Be careful in noting the direction of the oil seal assembly and ensuring that the oil seal surface fasces the outside of the engine.**
- **Be careful of the depth of the oil seal when attaching it.**
- **Be careful not to damage the oil seal.**
- **Attach the oil seal without applying lubrication. coolant, fuel, sealant (TB1217H), or silicon.**
- **Remove foreign substances such as residues from the oil seal assembly bore.**
- **Do not reuse the oil seal; replace it with a new one.**
- **Be careful not to damage the oil seal when attaching it.**

5) Remove the foreign substances on the timing gear case assembly surface and clean it with a dry cloth.
6) Apply sealant (TB1217H) to the timing gear case assembly surface with the diameter of Ø2.5 ±0.5 mm.

⚠ CAUTION

- **Be careful that the timing gear case has been attached in the right direction.**
- **Attach parts within five minutes of applying sealant (TB1217H) onto the parts.**
- **Do not start the engine or load pressure for 25 minutes after applying sealant (TB1217H) onto the parts**

7) Align the timing gear case with the pin and attach it.
8) Tighten 16 hex bolts at a tightening torque of 2.2 kgf·m.
9) Mount the crank speed sensor and then tighten the fixing bolt.

4. Attach the crankshaft pulley.

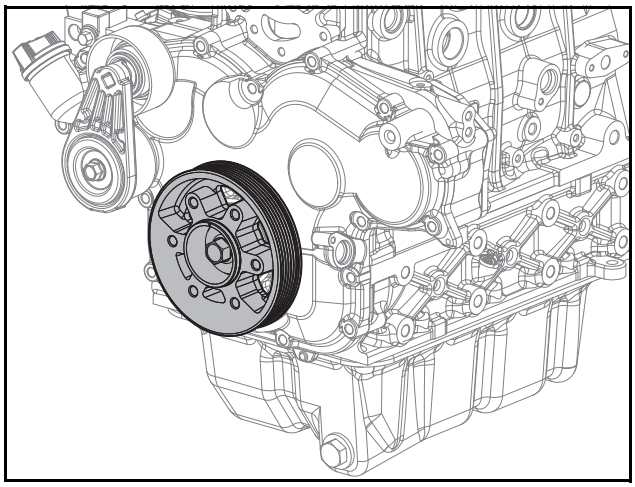

ED1819074

1) Align the crankshaft pulley to the pin and attach it.
2) Tighten flange hex bolts at a tightening torque of 26 kgf·m.

⚠ CAUTION

- **Be careful not to damage the oil seal.**
- **Fix the crankshaft to allow the flange hex bolts to be tightened with the specified torque.**

5. Attach the V-belt.

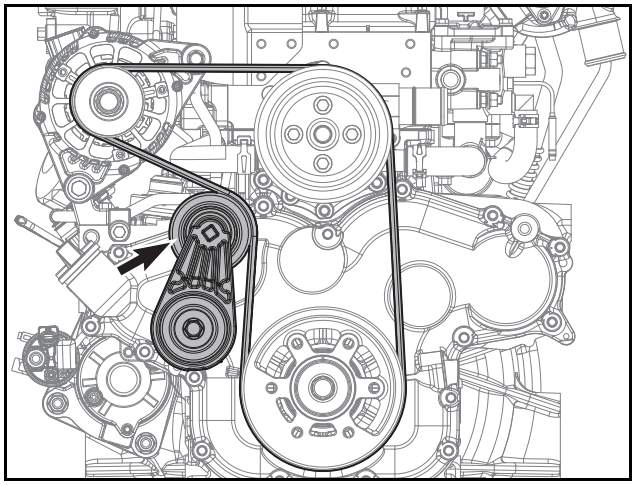

ED18190044

1) Wind a new belt around all pulleys except for the auto tensioner.
2) Turn the auto tensioner counterclockwise by using a quadrangular groove at the top of the auto tensioner pulley (Use a 10 mm x 10 mm quadrangular tool).
3) Wind the belt around the auto tensioner pulley by using a space generated by the rotation of the auto tensioner, and then naturally release the tensioner that has been pulled counterclockwise.

⚠ CAUTION

For checking and measuring the belt tension, refer to Belt Tension in Chapter 12 (Others/Driving Units).

9. Intake/exhaust system

Turbocharger 151
General Information 151
Failure Diagnosis 153
How to Maintain Turbocharger..... 157
Turbocharger Disassembly 158
Turbocharger Assembly..... 158
Turbocharger Check 159
Disassembly of EGR..... 160
Assembly of EGR..... 161
Intake manifold 163
Disassembly of Intake Manifold 163
Assembly of Intake Manifold 165
Exhaust manifold 168
Disassembly of Exhaust Manifold 168
Assembly of Exhaust Manifold..... 169

Turbocharger

General Information

Turbocharger increases the engine output by inhaling high-density air to the cylinder by using the exhaust heat energy of the engine.

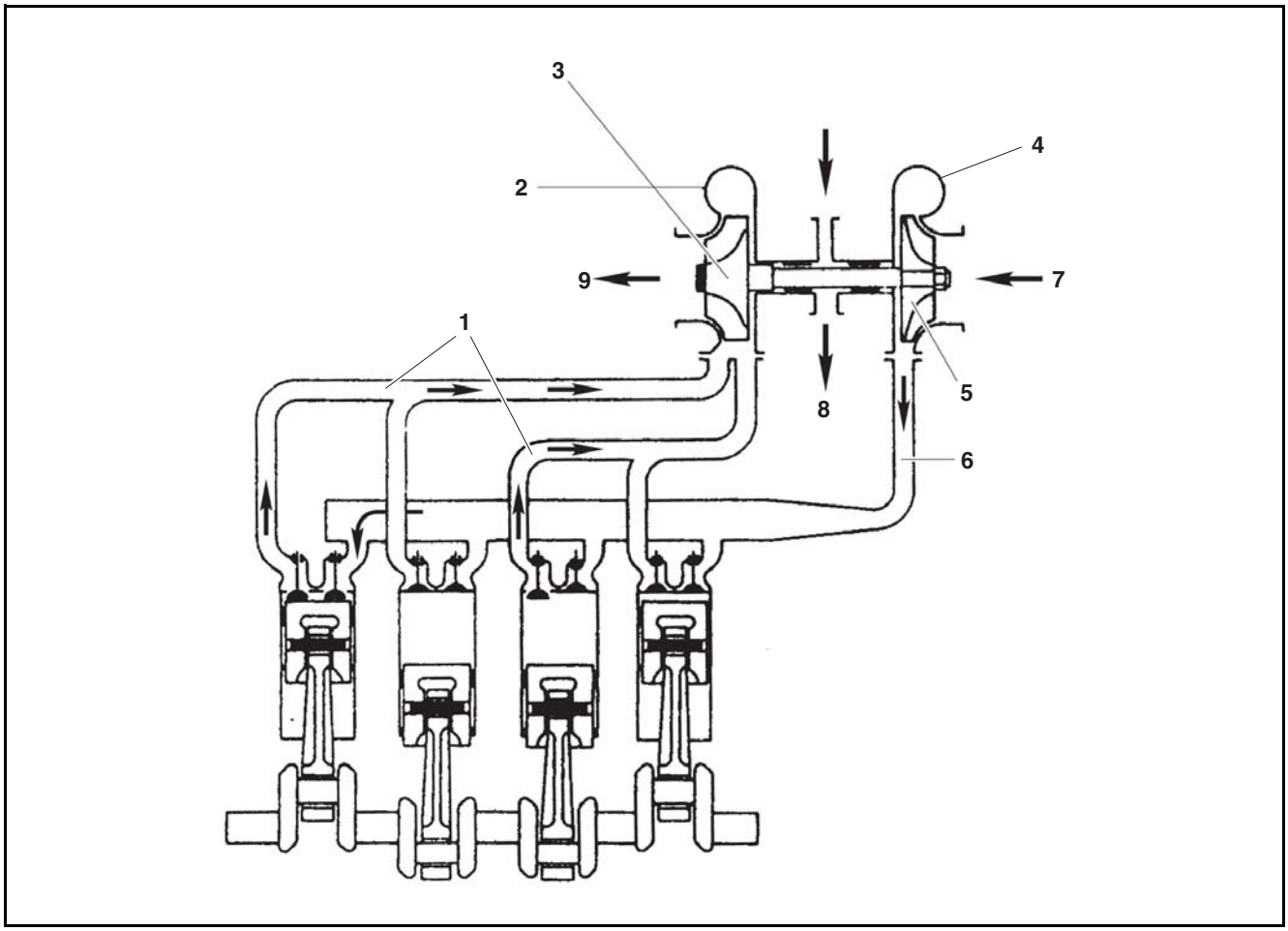

EDL022073B

1. Exhaust pipe
2. Turbine housing
3. Turbine wheel and shaft assembly
4. Compressor housing
5. Compressor wheel
6. Intake
7. Air inlet
8. Oil outlet
9. Exhaust gas outlet

1. The engine output is determined by fuel amount and engine efficiency.
2. To combust the delivered fuel completely and convert it to the useful work of the engine, enough air to completely combust the fuel should be delivered to the cylinder.
3. Actually, the engine output is determined by the capacity of the cylinder. If air is compressed and delivered to the cylinder, the amount of air in the cylinder is increased as much as compressed. Therefore, more fuel can be combusted and the engine output can be increased.
4. Turbocharger is to compress air and deliver the compressed air to a cylinder of an engine and Turbocharger is a forced induction device that forces more intake air, proportionately more fuel, into the combustion chamber and supercharges the exhaust gas energy into the atmosphere.

5. The key functions of a turbocharger are as follows.

1) Turbine: Kinetic energy of the exhaust gas from the combustion chamber passes through the turbine housing and is captured by the turbine blades, transferring the turning force to the turbine shaft. Turbine refers to the device where this operation is generated. A turbine has sealings and the heat screen to protect bearings from harmful impact of exhaust gas.

2) Compressor: A compressor is connected to a shaft where the turbine is connected, composing a rotor assembly. It uses the turning energy from the turbine shaft to inhale and compress air, and then transfers the compressed air to the intake. This is the performance property of a compressor.

3) Bearing system:

- Thrust bearing: Shaft force acts upon the turbine wheel. The thrust bearing prevents a shaft from being moved by the shaft force.
- Journal bearing: Journal bearings are floating types. They create a doubled-oil film on the exterior and interior of the bearing,
- allowing the bearing to spin independently. The doubled oil film works as a buffer reducing the sliding speed on the surface of the bearing lower than the shaft spinning speed, aiming dynamic stability.

4) Sealing of compressor shaft: A seal plate and seal ring compose a dual structure to prevent the compressed intake air and lubricating oil from leaking.

Failure Diagnosis

Phenomenon	Causes	Troubleshooting
Noise or vibration	Rotating part is contacted	Repair or replace it
	Unbalanced rotation of a rotor	Repair or replace it
	Burn	Repair or replace it
	Loose joint	Check or repair it
	Deformed or damaged intake unit hose	Replace it
	Poor clamping state	Adjust and tighten the clamp
	Contaminated or damaged air filter	Replace and check if the impeller of the turbocharger is damaged
	Leakage of coolant from the turbocharger or oil from the oil hose	Replace the hose and the gasket
	Leakage of gas from the exhaust manifold	Replace the gasket or tighten the fixing nut
	Poor turbo actuator operation	Replace the turbocharger
	Leakage from the engine block and the exhaust manifold	Check the engine
	Contaminated blow by gas and abnormal oil amount	Check the turbo impeller and the turbo intake outlet
	Large gap of the turbocharger wheel, causing interference with the wall	Check if there is any sand or metallic foreign substance
	Damaged turbocharger wheel	Check if there is any sand or metallic foreign substance
	Damaged wheel and shaft of the turbocharger	Check if there is any sand or metallic foreign substance
	Poor rotating force of the turbocharger wheel	Check if there is any sand or metallic foreign substance

Phenomenon	Causes	Troubleshooting
Lowered output	Leakage of gas from each part of the exhaust system	Check or repair it
	Clogged air filter element	Replace or clean it
	Contaminated or damaged turbocharger	Repair or replace it
	Leakage of air from the discharging part of the compressor shaft	Check or repair it
	Deformed or damaged intake unit hose	Replace it
	Poor clamping state	Adjust and tighten the clamp
	Contaminated or damaged air filter	Replace and check if the impeller of the turbocharger is damaged
	Poor turbo actuator operation	Replace the turbocharger
	Leakage from the engine block and the exhaust manifold	Check the engine
	Contaminated blow by gas and abnormal oil amount	Check the turbo impeller and the turbo intake outlet
	Large gap of the turbocharger wheel, causing interference with the wall	Check if there is any sand or metallic foreign substance
	Damaged turbocharger wheel	Check if there is any sand or metallic foreign substance
	Damaged wheel and shaft of the turbocharger	Check if there is any sand or metallic foreign substance
	Poor rotating force of the turbocharger wheel	Check if there is any sand or metallic foreign substance
Oil leakage	Deformed or damaged intake unit hose	Replace it
	Poor clamping state	Adjust and tighten the clamp
	Contaminated or damaged air filter	Replace and check if the impeller of the turbocharger is damaged
	Leakage of coolant from the turbocharger or oil from the oil hose	Replace the hose and the gasket
	Poor turbo actuator operation	Replace the turbocharger

Phenomenon	Causes	Troubleshooting
Oil leakage	Leakage from the engine block and the exhaust manifold	Check the engine
	Contaminated blow by gas and abnormal oil amount	Check the turbo impeller and the turbo intake outlet
	Large gap of the turbocharger wheel, causing interference with the wall	Check if there is any sand or metallic foreign substance
	Damaged turbocharger wheel	Check if there is any sand or metallic foreign substance
	Damaged wheel and shaft of the turbocharger	Check if there is any sand or metallic foreign substance
	Poor rotating force of the turbocharger wheel	Check if there is any sand or metallic foreign substance
Oil consumption	Poor clamping state	Adjust and tighten the clamp
	Leakage of coolant from the turbocharger or oil from the oil hose	Replace the hose and the gasket
	Leakage from the engine block and the exhaust manifold	Check the engine
	Contaminated blow by gas and abnormal oil amount	Check the turbo impeller and the turbo intake outlet
	Large gap of the turbocharger wheel, causing interference with the wall	Check if there is any sand or metallic foreign substance
	Damaged turbocharger wheel	Check if there is any sand or metallic foreign substance
	Damaged wheel and shaft of the turbocharger	Check if there is any sand or metallic foreign substance
	Poor rotating force of the turbocharger wheel	Check if there is any sand or metallic foreign substance

Phenomenon	Causes	Troubleshooting
Black and white emissions	Deformed or damaged intake unit hose	Replace it
	Contaminated or damaged air filter	Replace and check if the impeller of the turbocharger is damaged
	Leakage of coolant from the turbocharger or oil from the oil hose	Replace the hose and the gasket
	Poor turbo actuator operation	Replace the turbocharger
	Contaminated blow by gas and abnormal oil amount	Check the turbo impeller and the turbo intake outlet
	Large gap of the turbocharger wheel, causing interference with the wall	Check if there is any sand or metallic foreign substance
	Damaged turbocharger wheel	Check if there is any sand or metallic foreign substance
	Damaged wheel and shaft of the turbocharger	Check if there is any sand or metallic foreign substance
	Poor rotating force of the turbocharger wheel	Check if there is any sand or metallic foreign substance
Blue emissions	Leakage from the engine block and the exhaust manifold	Check the engine
Too much fog	Oil leakage to the turbine or compressor	Repair or replace it
	Worn or damaged seal ring due to worn bearing	Repair or replace it
Too much exhaust emissions	Clogged air filter element	Replace or clean it
	Clogged air duct	Check or repair it
	Air leakage from the intake system	Check or repair it
	The turbocharger cannot rotate because of burning	Repair or replace it
	A turbine blade or compression wing contacts with the other one or is damaged	Repair or replace it
	Deformed or clogged exhaust system pipe	Check or repair it

How to Maintain Turbocharger

1. Cautions for engine operation

1) Observe the followings when starting, operating, and stopping an engine.

Item	Cautions	Reasons
Starting an engine	Check the oil amount	
	Therefore, start the engine with the starter motor to check the rise of oil pressure (until the gradation of the oil pressure gauge moves or the pressure indicator lamp is turned on).	Overhasty start of engine leads to engine rotation without lubricating turbocharger and other engine parts, causing abnormal wear or burning of bearings.
	If you replace oil, oil filter cartridge, or lubrication system parts or use an engine in cold areas, or the engine has stopped for a long period, loosen the oil pipe joint at the inlet of the turbocharger and run the starter motor until oil flows out. After completing the work, tighten the oil pipe joint again and start the engine.	When an engine has stopped or kept cold for a long period, circulation of oil in the pipe gets poor.
After starting an engine	Operate the engine at idle for five minutes from starting it.	When the engine is suddenly loaded while the engine and the turbocharger have not been smoothly rotated after starting the engine, parts with insufficient oil may be burnt.
	Check if oil, gas, or air is leaked from each part. If so, take proper action.	Leakage of oil, gas, or air (especially oil) reduces oil pressure and loss of oil cause burning of bearings.
During Operation	check the following.	
	Oil pressure At idle: 1.5 ~ 3.0 kg/cm^2 Fully loaded: 3.0 ~ 5.5 kg/cm^2	Too low oil pressure causes abnormal wearing or burning of bearings. Too high oil pressure causes oil leakage.
	When abnormal noise or vibration occurs, slowly reduce the rotate count until the engine stops and then figure out the causes.	Operating an engine with noise or vibration may cause irreversible damage of the engine.
Stopping an Engine	Operate the engine at idle for five minutes before stopping it.	Sudden engine stop after operating the engine under high load allows the heat from the red-heated turbine blade to be delivered to the bearing system. Then oil burns and the bearing metal and rotation shaft are burnt.

2. Cautions for Maintenance

1) When the RPM is rapidly increased after starting the engine, the journal bearings in the crankshaft is excessively rotated, the crankshaft is rotated at excessive speed before the journal bearing of the crankshaft is lubricated fully. If the turbocharger rotates in this situation, bearings are not smoothly cooled and lubricated, causing bearing burn and damage of the related parts.

2) Please operate the engine for two minutes or more in order to lubricate the turbocharger fully after replacing the engine oil or oil filter.

3) If an engine has been operated at high speed for a long period, fully operate the engine at idle and then stop the engine. Otherwise, the turbine wheel continuously runs without oil pressure in the turbocharger. Therefore, no oil film is created on the center bearings and the journal bearings of the turbocharger, causing bearing, wearing out and shortening of the turbocharger lifetime.

4) If an engine is not operated for a long period during cold weather or in areas with cold climate, operate the engine at idle after starting the engine until the engine oil pressure is normal.

5) The turbocharger turbine spins at high speed of 50,000 ~ 200,000 rpm. Therefore, lubrication of bearings may determine the turbocharger lifetime. Please use only recommended genuine engine oil and check and replace the engine oil periodically.
6) Prolonged usage of contaminated air cleaner may cause a critical damage of the turbocharger. Regularly check and replace the air cleaner.
7) A turbocharger is a very complex and precise part. Only certified and skilled technicians should work on it.
8) If a turbocharger is operated without intake and exhaust pipe, serious human injury may occur and critical faults of the engine performance may occur. Please operate a turbocharger only when all of parts are exactly mounted on the specified position.
9) Do not lift up a turbocharger by grabbing the actuator. The actuator may be damaged because of the weight of the turbocharger.
10) The weight of a turbocharger is about 4.0 kg or more. To lift up a turbocharger for installing or removing it, the worker should lower the center of gravity or press his body close to the turbocharger. Otherwise, worker may drop the turbocharger, causing damage of the part and injury.

Turbocharger Disassembly

1. Disconnect the breather hose.

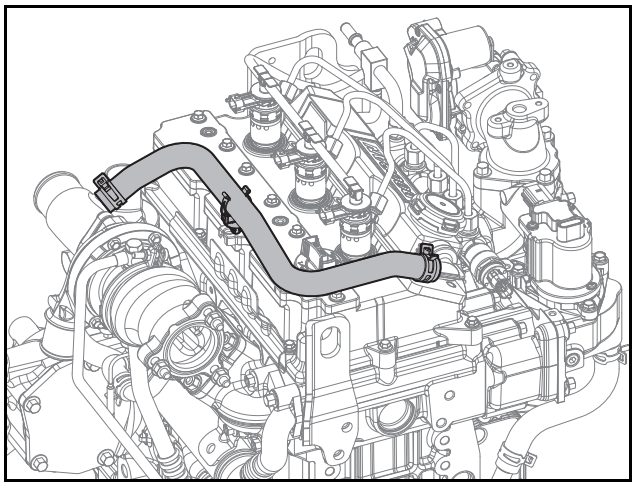

ED18190050

1) Remove the hose clamps.
2) Disconnect the breather hose.

2. Remove the turbocharger.

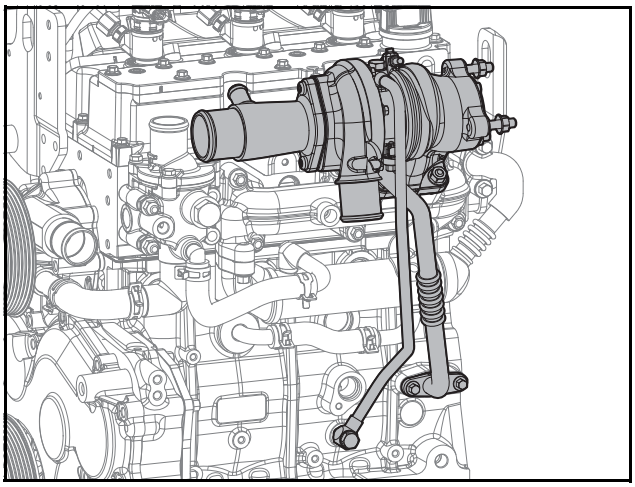

ED18190052

1) Loosen 2 hex bolts and remove the heat screen. (if needed)
2) Loosen 2 hollow screws and disconnect the oil delivery pipe.
3) Loosen 4 flange hex bolts.
4) Disconnect the oil return pipe.
5) Loosen 4 flange hex nuts.
6) Remove the turbocharger and the gasket.

Turbocharger Assembly

1. Assemble the turbocharger.

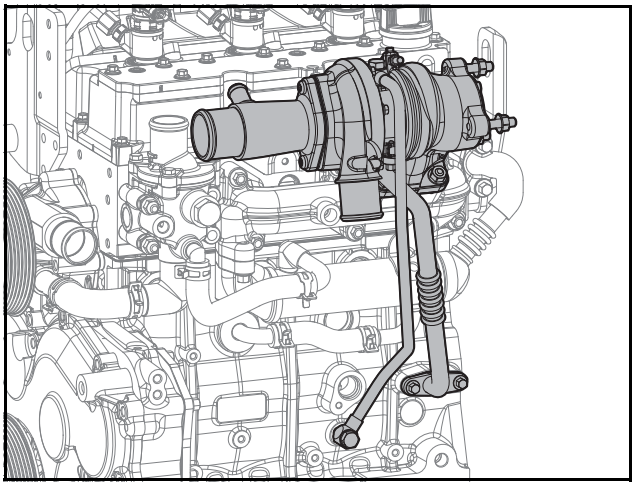

ED18190052

1) Connect the oil return pipe and gasket to the turbocharger.
2) Tighten 2 flange hex bolts at a tightening torque of 1.25 ±0.12 kgf·m.

3) Mount the turbocharger and the gasket to the exhaust manifold.

⚠ CAUTION

- **Be careful to note the direction when mounting the gasket.**
- **Be careful not to damage the gasket while mounting it.**
- **Do not reuse gaskets; replace them with new ones.**

4) Tighten 4 flange hex nuts at a tightening torque of 2.2 kgf·m.
5) Assemble the gasket between oil return pipe and cylinder block. Tighten 2 flange hex nuts at a tightening torque of 1.0 kgf·m.

⚠ CAUTION

Do not reuse the clamp if it has permanent deformation by irregular shape.

6) Temporary tighten 2 hollow screws to the oil delivery pipe manually.
7) Tighten 2 hollow screws at a tightening torque of 1.9 kgf·m.

⚠ CAUTION

- **Do not reuse the oil supply pipe.**
- **Tighten the hollow screw at the cylinder block side first, and then tighten the other at the turbocharger side.**

Note) During assembly, add 3 cc of clean oil to the turbocharger oil inlet.

2. Connect the breather hose.

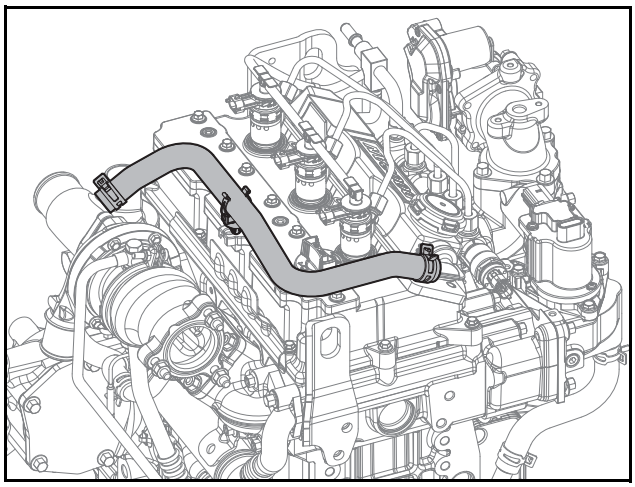

ED18190050

1) Connect the breather hose.
2) Mount the hose clamps.

⚠ CAUTION

Do not reuse the clamp if it has permanent deformation by irregular shape.

Turbocharger Check

1. Routine Check and Repair: The turbocharger performance is determined by maintenance state of the engine. So you should regularly perform inspection and check as specified.

1) Intake system: For the intake system, the air filter should be carefully managed. For a wet type air filter, if the oil amount is lower than the specified amount, filtering efficiency is lowered. On the contrary, if it is too high, the filter absorbs oil and contaminates the case. Especially, when the rotor is contaminated, the precisely adjusted balance is broken, causing vibration. In addition, the bearings are overloaded, resulting in bearing burn and abnormal wearing. Therefore, an air filter should be carefully used and maintained according to the instructed and specified ways. For a dry type air filter, the intake resistance should be small as possible.
2) Exhaust system: For the exhaust system, when exhaust gas leaks from the exhaust pipe or turbocharger joint, supercharging efficiency is lowered. So you need to pay attention to prevent gas leakage and burn. Heat resistant nuts are used for parts which are highly heated during operation, such as turbine seal, and the nuts should not be mixed with other nuts. The screw burn prevention paint should be applied to the assembly nuts of the specified positions.
3) Lubrication system: For the lubrication system, be careful with the oil quality and the replacement time of the cartridge of the oil filter. Degradation of engine oil has bad effect on the turbocharger, as well as the engine body.

2. Regular Inspection and Repair: The state and contamination of a turbocharger should be checked regularly.

1) How to check the rotating state of a rotor assembly: You can check the rotating state of a rotor assembly by checking the abnormal sound which occurs while the solid of rotation is rotating. If you use a sound rod, contact the neb of the sound rod to the turbocharger housing and slowly raise the RPM. If high-pitched sound continues, it means that the state is abnormal. In this case, the bearing or the rotor assembly may be abnormal. So you need to replace or repair the turbocharger.

2) How to detach and check the turbocharger: Detach the turbocharger from the engine and clean or check it. At this time, seal the oil inlet and outlet with sealing tape.
3) Cautions for attaching the turbocharger to the engine: Please observe the following precautions as attaching the turbocharger to the engine and handling it after attaching. Especially, be careful not to let foreign substances flow into the turbocharger.

- Lubrication system: Before attaching the turbocharger to the engine, inject new oil into the oil inlet and spin the turbine shaft to lubricate journal bearings and thrust bearings. Cleanse the pipes from starting from the engine to the oil inlet and outlet and check if there is any damage of the pipes or foreign substance in the pipe. Precisely connect the oil pipes to prevent oil leaks.
- Intake system: Check if there is any foreign substance within the intake system. Precisely attach the intake system to the engine to prevent air leaks from the joints of the intake system and the air filter.
- Exhaust system: Check if there is any foreign substance in the exhaust system. The heat-resistant bolts and nuts should be used. Do not use any of general nuts and bolts. Apply burn prevention paint to the bolts and nuts. Precisely attach the exhaust system to the engine to prevent gas leaks from the exhaust system joints.

Disassembly of EGR

1. Disconnect the breather hose.

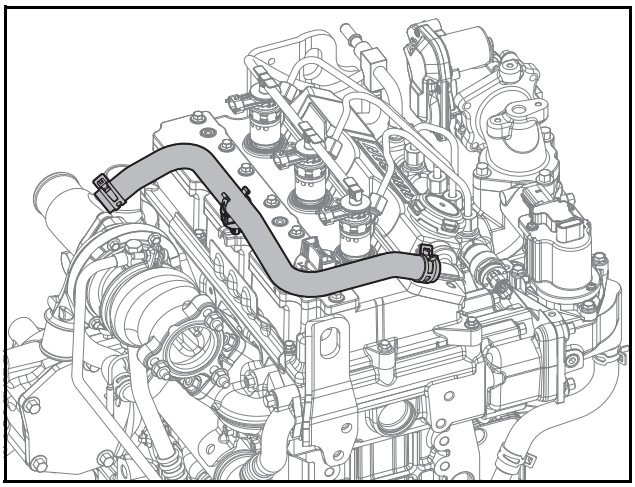

ED18190050

1) Remove the hose clamps.
2) Disconnect the breather hose.

2. Remove the turbocharger.

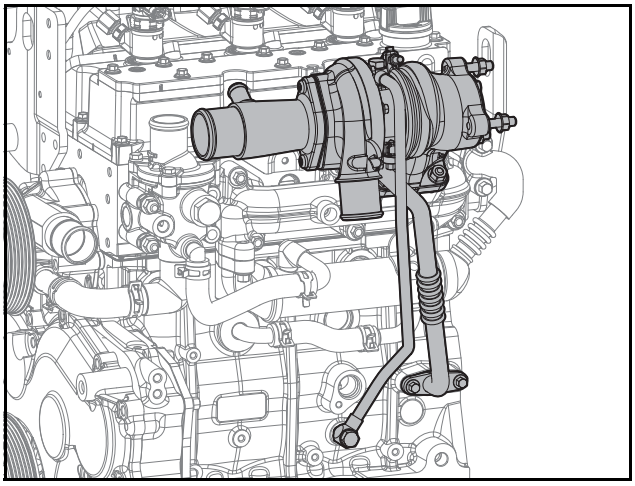

ED18190052

1) Loosen 2 hex bolts and remove the heat screen. (if needed)
2) Loosen 2 hollow screws and disconnect the oil delivery pipe.
3) Loosen 4 flange hex bolts.
4) Disconnect the oil return pipe.
5) Loosen 4 flange hex nuts.
6) Remove the turbocharger and the gasket.

3. Remove the EGR cooler.

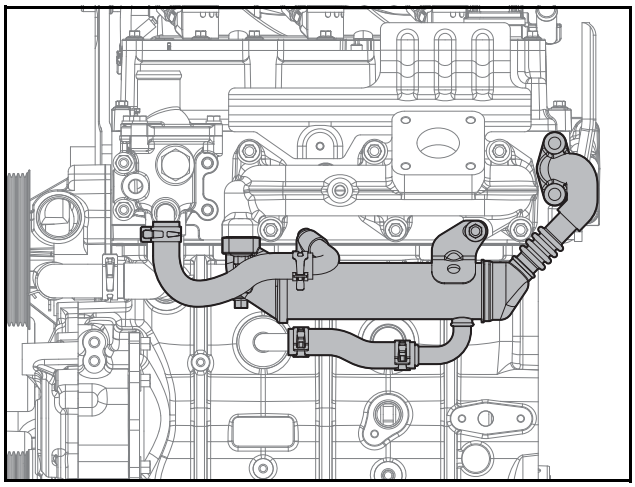

ED18190053

1) Remove the hose clamp.
2) Disconnect 2 hose.
3) Loosen 5 flange hex bolt.
4) Remove EGR cooler and 2 gasket.

⚠ CAUTION

Exhaust gas make engine parts extremely hot. Only remove the parts when they have fully cooled to prevent burns.

4. Disconnect the EGR valve.

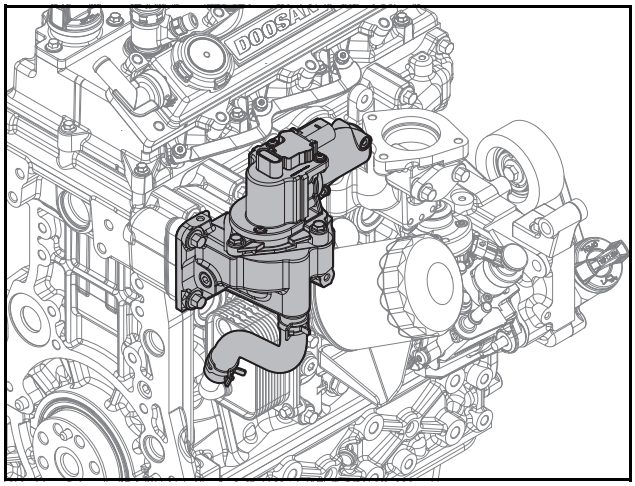

ED18190062

1) Remove the hose clamps.
2) Disconnect the hose.
3) Loosen 4 flange hex bolt.
4) Remove EGR valve and gasket.

Assembly of EGR

1. Attach the EGR valve.

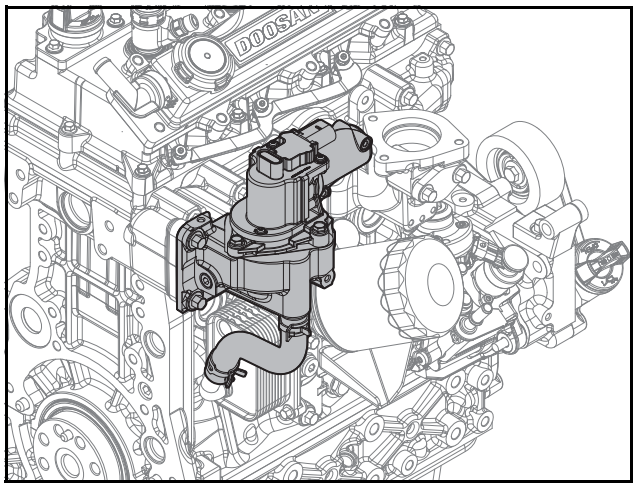

ED18190062

1) Attach the EGR valve and gasket to the intake manifold.

⚠ CAUTION

- **The EGR valve has to be handled with care, because it is sensitive to external impact.**

2) Tighten 4 flange hex bolts at a tightening torque 2.2 kgf·m.
3) Assemble hose and clamps.
2. Attach the EGR cooler.

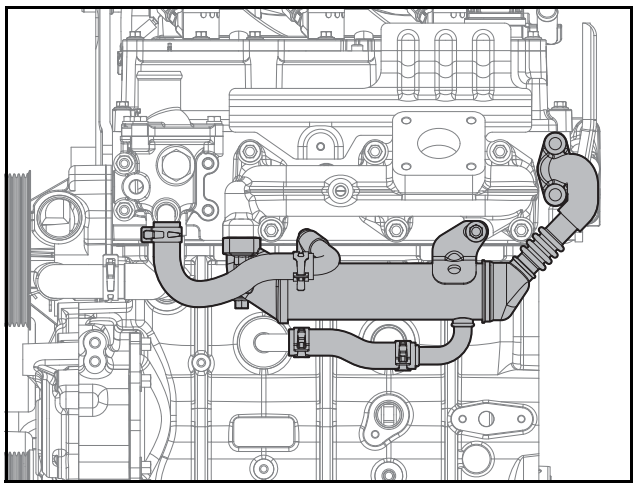

ED18190053

⚠ CAUTION

- **Be careful to note the direction when mounting the EGR cooler.**
- **Be careful not to damage the gasket while mounting it.**

1) Mount the EGR cooler and gaskets to the exhaust manifold and cylinder head.

2) Tighten 3 flange hex bolts at a tightening torque of 3.1 kgf·m. (exhaust manifold side)
3) Tighten 2 flange hex bolts at a tightening torque of 2.2 kgf·m. (cylinder head side)
4) Assemble 2 hoses and clamps.

⚠ CAUTION

Do not reuse the clamps if it has permanent deformation by irregular shape.

3. Assemble the turbocharger.

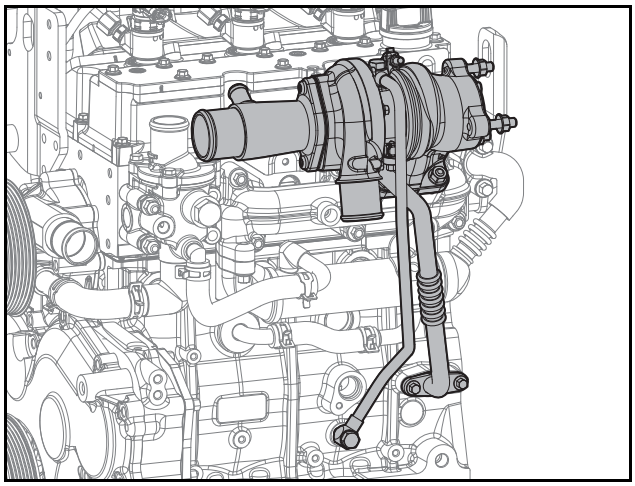

ED18190052

1) Connect the oil return pipe and gasket to the turbocharger.
2) Tighten 2 flange hex bolts at a tightening torque of 1.25 ±0.12 kgf·m.
3) Mount the turbocharger and the gasket to the exhaust manifold.

⚠ CAUTION

- **Be careful to note the direction when mounting the gasket.**
- **Be careful not to damage the gasket while mounting it.**
- **Do not reuse gaskets; replace them with new ones.**

4) Tighten 4 flange hex nuts at a tightening torque of 2.2 kgf·m.
5) Assemble the gasket between oil return pipe and cylinder block. Tighten 2 flange hex nuts at a tightening torque of 1.0 kgf·m.

⚠ CAUTION

Do not reuse the clamp if it has permanent deformation by irregular shape.

6) Temporary tighten 2 hollow screws to the oil delivery pipe manually.
7) Tighten 2 hollow screws at a tightening torque of 1.9 kgf·m.

⚠ CAUTION

- **Do not reuse the oil supply pipe.**
- **Tighten the hollow screw at the cylinder block side first, and then tighten the other at the turbocharger side.**

Note) During assembly, add 3 cc of clean oil to the turbocharger oil inlet.

4. Connect the breather hose.

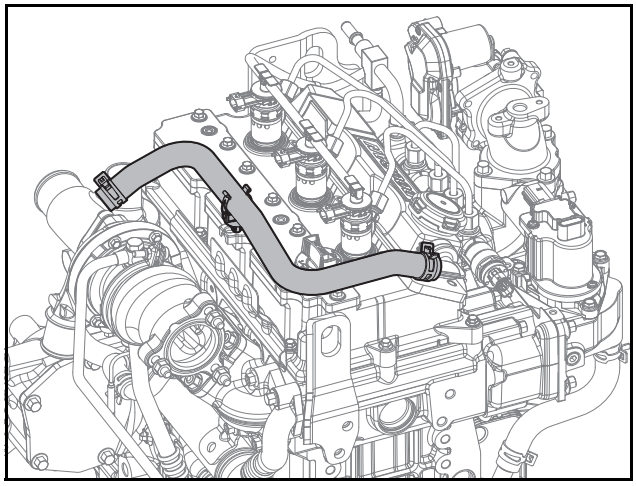

ED18190050

1) Connect the breather hose.
2) Mount the hose clamps.

⚠ CAUTION

Do not reuse the clamp if it has permanent deformation by irregular shape.

Intake manifold

Disassembly of Intake Manifold

1. Disconnect the throttle (inlet pipe) and the intake stake.

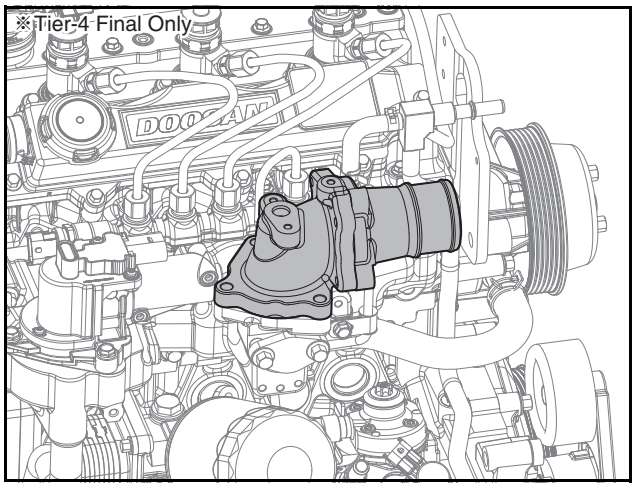

ED18190180

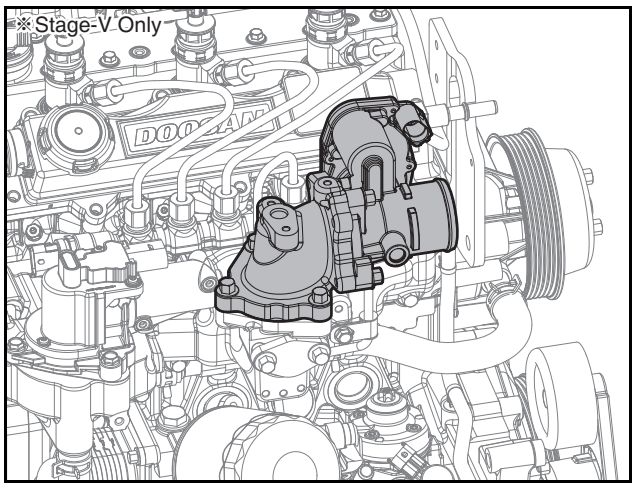

ED18190051

1) Loosen 3 hex bolts.
2) Remove the throttle (inlet pipe) and the gaskets from the intake stake.
3) Loosen 3 hex bolts.
4) Remove the intake stake from the intake manifold.

2. Disconnect oil level gauge and coolant hose.

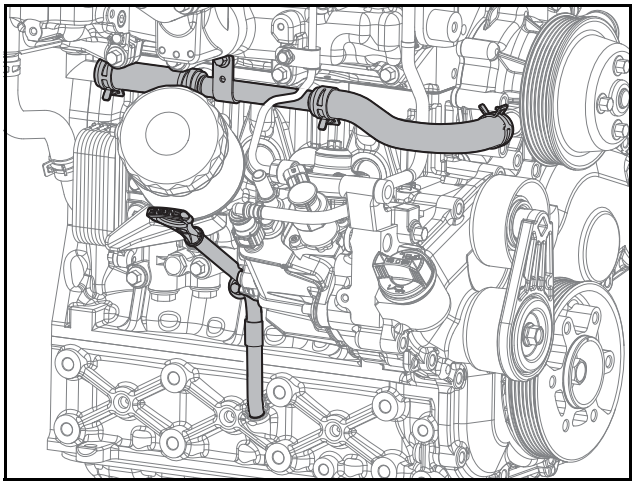

ED1819089

1) Loosen the flange hex bolt.
2) Remove the hose clamp.
3) Disconnect the coolant hose.
4) Remove the oil level gauge.
5) Loosen the flange hex bolt.
6) Disconnect the oil level gauge guide tube.

3. Disconnect the fuel return hose.

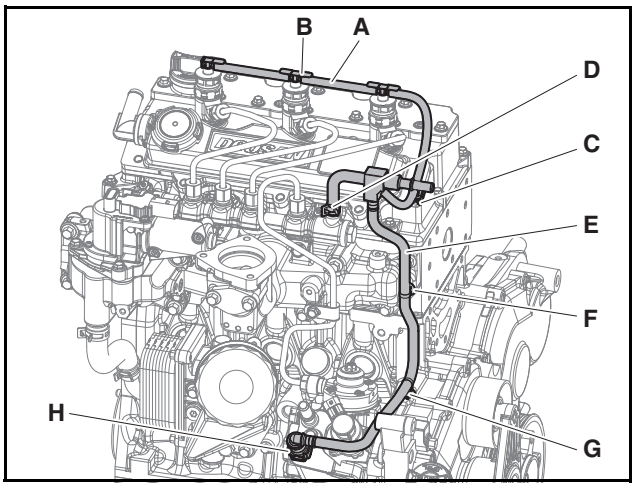

ED18190059

1) Open the adopter (B) of injector return hose (A).
2) Loosen the injector return hose (A).
3) Remove the edge clip (C).
4) Loosen the hose clamp (D).
5) Remove the cable tie (F), (C).
6) Disconnect the quick connector (H).
7) Disassemble the fuel return hose (A) and (E).

4. Disconnect the fuel injection pipes.

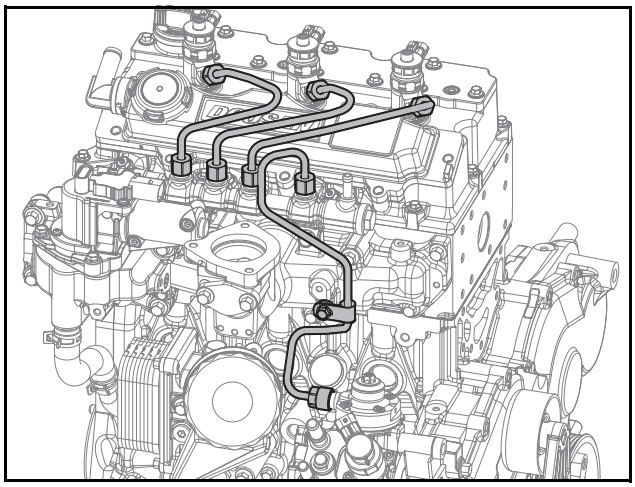

ED18190060

1) Loosen the nuts connected to the injector and the common rail.
2) Disconnect the fuel injection pipes.
3) Loosen the nuts connected to the common rail and the fuel injection pump.
4) Disconnect the fuel injection pipes.

⚠ CAUTION

Do not reuse fuel injection pipes and clamp; replace them with new ones.
If fuel injection pipes and clamp are reused it may allow foreign substances into the fuel pipes or cause oil leaks from bolt clamping and cause a critical fault in engine performance.

5. Detach the common rail.

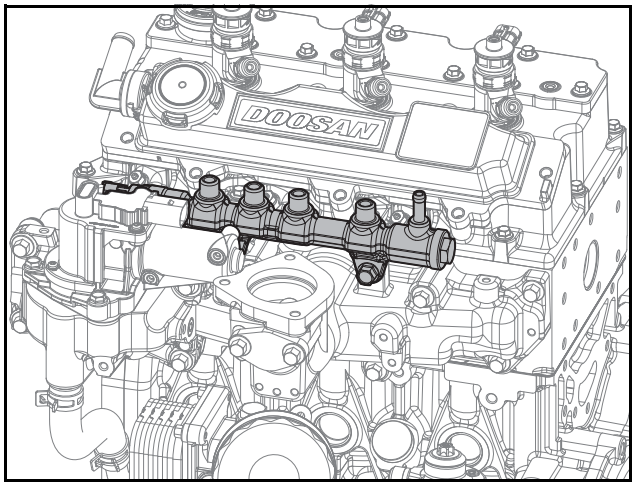

ED18190061

1) Loosen 2 hex bolts.
2) Remove the common rail from the intake manifold.

6. Disconnect the EGR valve.

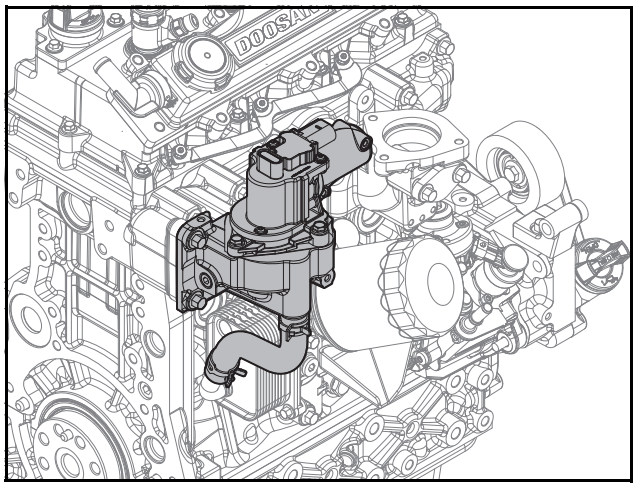

ED18190062

1) Remove the hose clamps.
2) Disconnect the hose.
3) Loosen 4 flange hex bolt.
4) Remove EGR valve and gasket.
7. Remove the intake manifold.

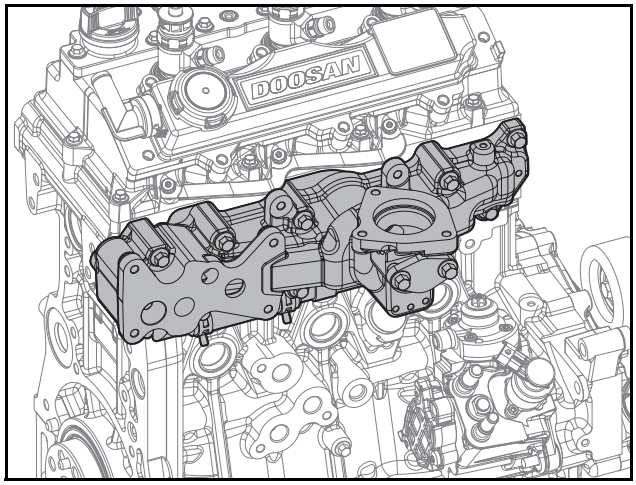

ED18190064

1) Loosen 13 flange hex bolt.
2) Remove the intake manifold and the gasket.
3) Loosen 2 flange hex bolts.
4) Remove EGR mixer and gasket.

Assembly of Intake Manifold

1. Attach the intake manifold.

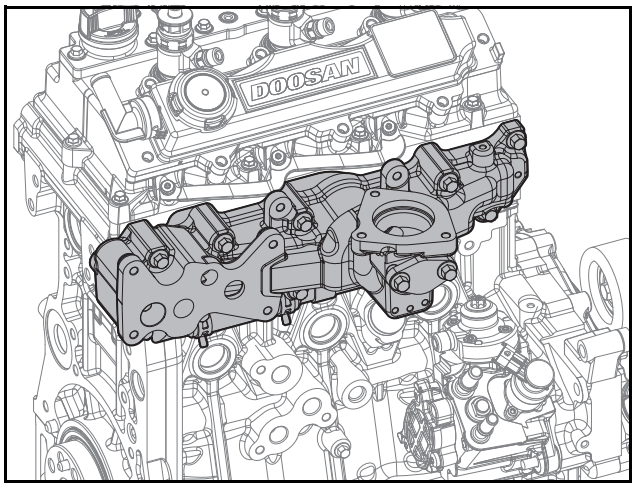

ED18190064

1) Mount the intake manifold and the gasket.

⚠ CAUTION

- **Be careful to note the direction when mounting the gasket.**
- **Be careful not to damage the gasket while mounting it.**

2) Tighten 11 flange hex bolts and 2 flange hex bolts at a tightening torque of 2.2 kgf·m.
3) Attach EGR mixer and gasket to the intake manifold.
4) Tighten 2 flange hex bolts at a tightening torque 2.2 kgf·m.

2. Attach the EGR valve.

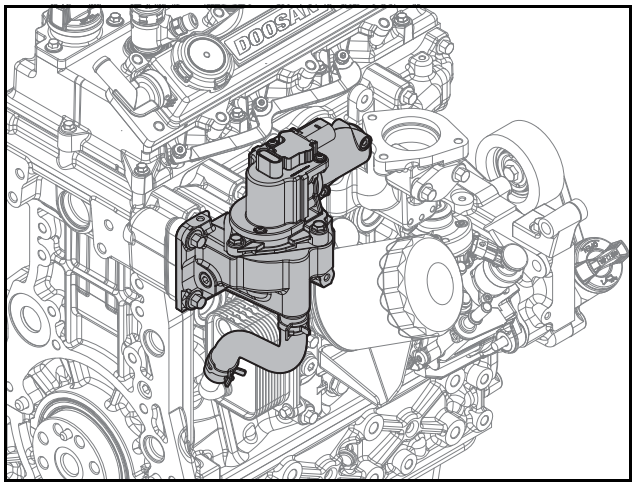

ED18190062

1) Attach the EGR valve and gasket to the intake manifold.

⚠ CAUTION

- **The EGR valve has to be handled with care, because it is sensitive to external impact.**

2) Tighten 4 flange hex bolts at a tightening torque 2.2 kgf·m.
3) Assemble hose and clamps.

3. Attach the common rail.

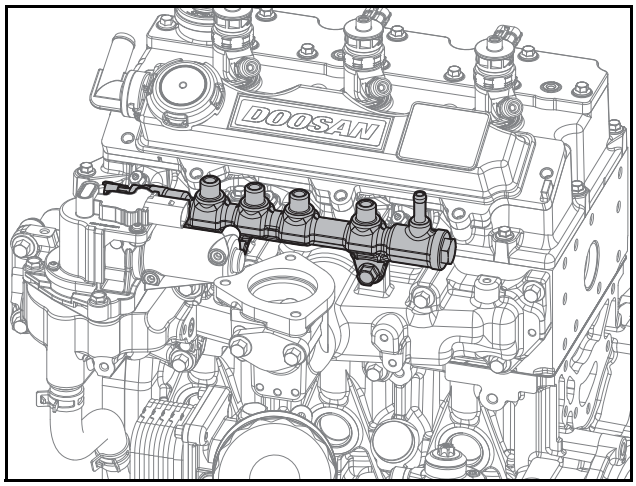

ED18190061

1) Attach the common rail to the intake manifold.

⚠ CAUTION

- **Be careful to note the direction when attaching the common rail.**
- **Be careful not to damage the common rail while attaching it.**

2) Temporarily tighten 2 hex bolts by hand.
3) Tighten 2 hex bolts at a tightening torque of 2.2 kgf·m.

4. Connect the fuel injection pipes.

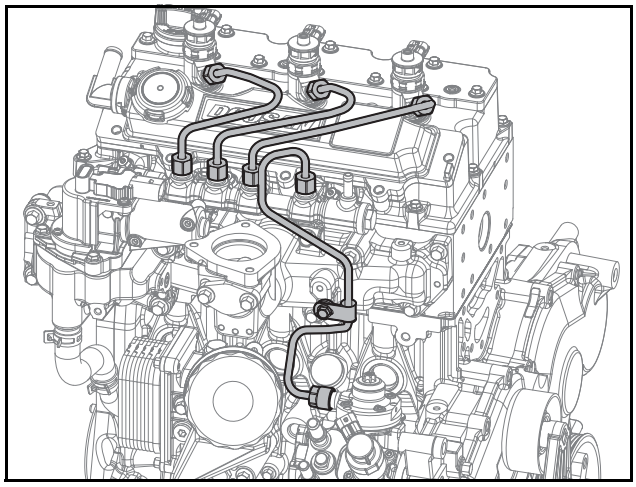

ED18190060

1) Loosen 2 hex bolts of the common rail.
2) Temporarily connect the fuel injection pipes by hand.

⚠CAUTION

- **Do not bend the fuel injection pipes by force.**
- **Be careful to note the direction when connecting the fuel injection pipes.**
- **Assemble the nut on one side of the fuel injection pipe first, and then the nut on the other side to connect the round part of the pipe to the correspondent part correctly.**
- **Do not reuse fuel injection pipes and clamp; replace them with new ones. Reusing fuel injection pipes and clamp may allow foreign substances into the fuel pipes or oil leaks from the bolt clamping to occur, causing a critical fault in engine performance.**

3) Tighten 2 hex bolts of the common rail at a tightening torque of 2.2 kgf·m.
4) Tighten the nuts of the fuel injection pipe, which are connected to the common rail and the injector, at a tightening torque of 3.0 kgf·m.
5) Tighten the nuts of the fuel injection pipe, which are connected to the common rail and the fuel injection pump, at a tightening torque of 3.0 kgf·m.

5. Connect the fuel return hose.

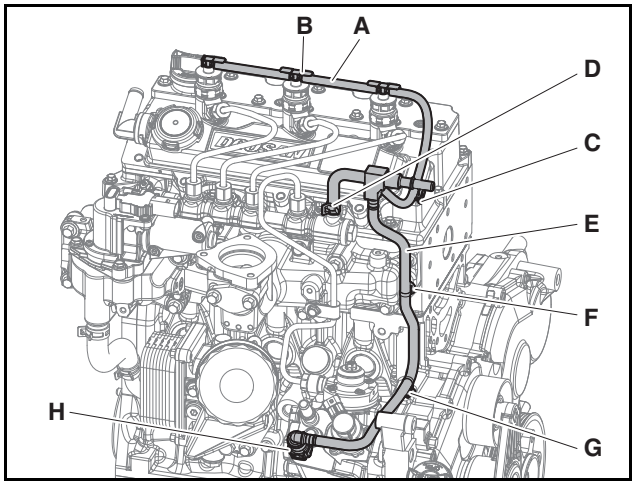

ED18190059

1) Press the fuel return hose into the end of the nipple and connect it.

⚠CAUTION

- **Be careful to note the direction when connecting the fuel return hose.**
- **The injector should be fully connected with the hose.**
- **Be careful to avoid damage for fuel return hose of injector.**
- **Don't press on the fuel hose, don't drop heavy tool like as spanner on engine, don't step on fuel hose, don't stand on engine.**
- **If the fuel hose are broken by wrong handling, it is possible fire.**

2) Mount 4 hose clips.
3) Mount the hose clips.

⚠CAUTION

Fix the handle of hose clip to face the front of the engine.

4) Tighten the flange hex bolts.
5) Mount the fixing clips.

6. Mount the oil level gauge and the coolant hose.

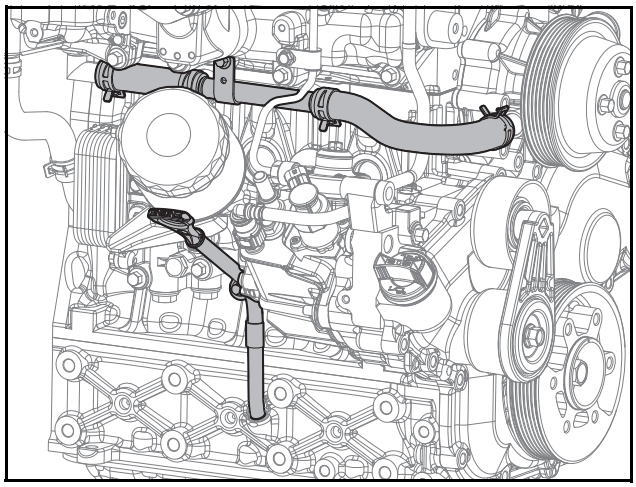
ED1819089

1) Replace the O-ring of the oil level gauge guide tube with a new part.
2) Insert the oil level gauge guide tube in the cylinder block and connect it.
3) Tighten flange hex bolts at a tightening torque of 1.0 kgf·m.

4) Mount the oil level gauge.

⚠ CAUTION

Make the handle of the oil level gauge face the reverse direction from the center of the engine.

5) Connect the coolant hose.
6) Mount the hose clamps.

⚠ CAUTION

Do not use hose clamps more than twice; replace them with new ones.

7) Tighten flange hex bolts at a tightening torque at a tightening torque of 2.2 kgf·m.

7. Connect the throttle (inlet pipe) and the intake stake.

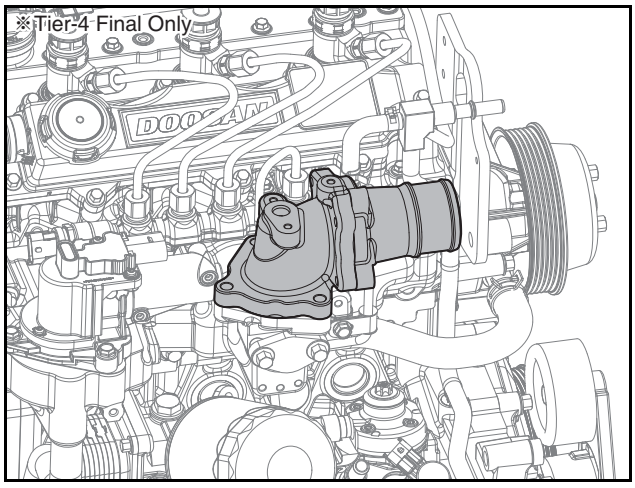

ED18190180

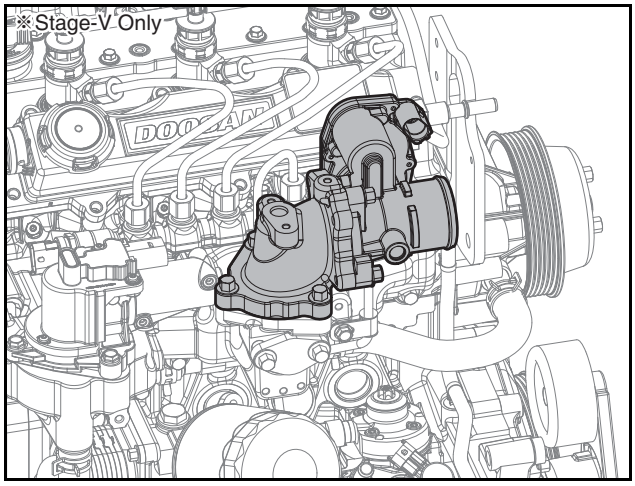

ED18190051

1) Mount the intake stake and the gasket to the intake manifold.
2) Tighten 3 hex bolts at a tightening torque of 2.2 kgf·m.
3) Connect the throttle (inlet pipe) and the gaskets to the intake stake.
4) Tighten 3 hex bolts at a tightening torque of 2.2 kgf·m.

⚠ CAUTION

- **Be careful to note the direction when mounting the gasket.**
- **Be careful not to damage the gasket while mounting it.**

Exhaust manifold

Disassembly of Exhaust Manifold

1. Disconnect the breather hose.

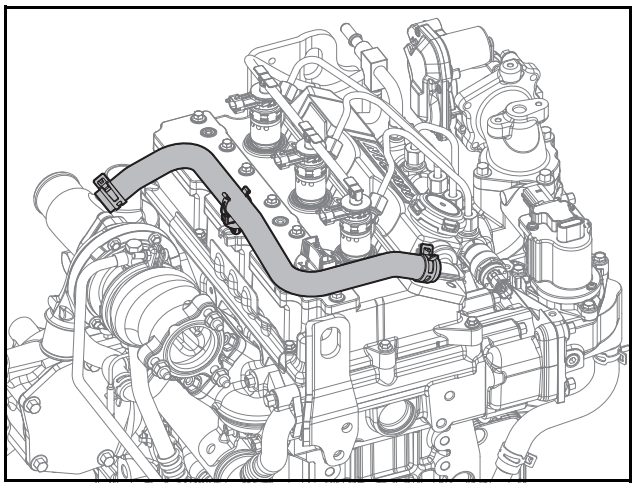

ED18190050

1) Remove the hose clamps.
2) Disconnect the breather hose.

2. Remove the turbocharger.

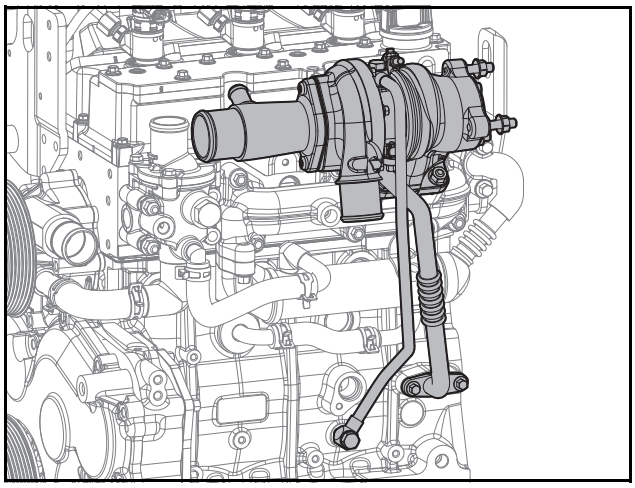

ED18190052

1) Loosen 2 hex bolts and remove the heat screen. (if needed)
2) Loosen 2 hollow screws and disconnect the oil delivery pipe.
3) Loosen 4 flange hex bolts.
4) Disconnect the oil return pipe.
5) Loosen 4 flange hex nuts.
6) Remove the turbocharger and the gasket.

3. Remove the EGR cooler.

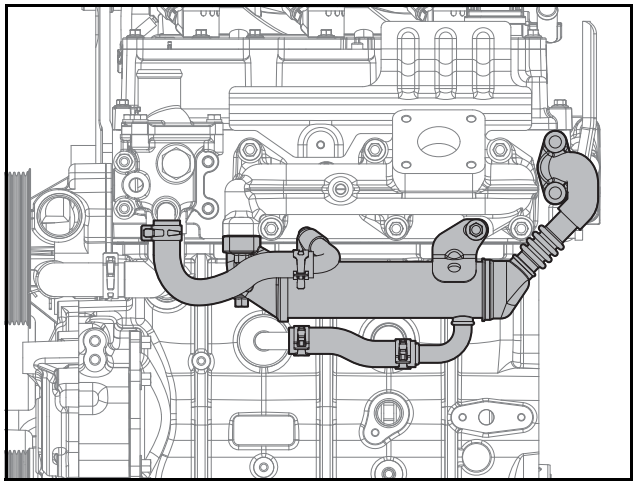

ED18190053

1) Remove the hose clamp.
2) Disconnect 2 hose.
3) Loosen 5 flange hex bolt.
4) Remove EGR cooler and 2 gasket.

⚠ CAUTION

Exhaust gas make engine parts extremely hot. Only remove the parts when they have fully cooled to prevent burns.

4. Remove the thermostat.

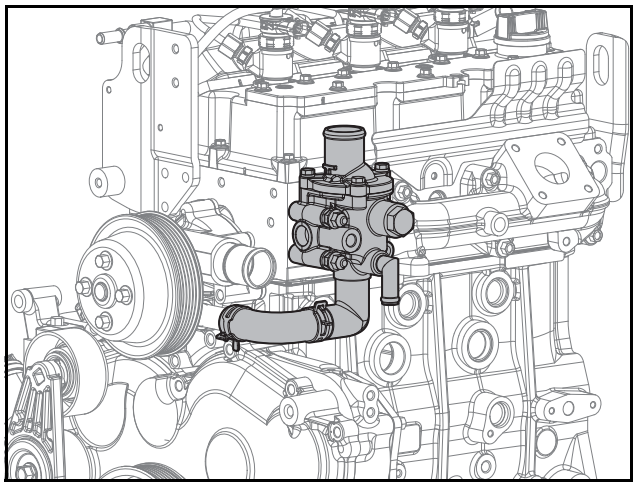

ED18190054

1) Remove the hose clamps.
2) Disconnect the rubber hose.
3) Loosen 2 flange hex bolt, 2 space bolt and 2 flange hex nut.
4) Remove thermostat.

5. Remove the exhaust manifold.

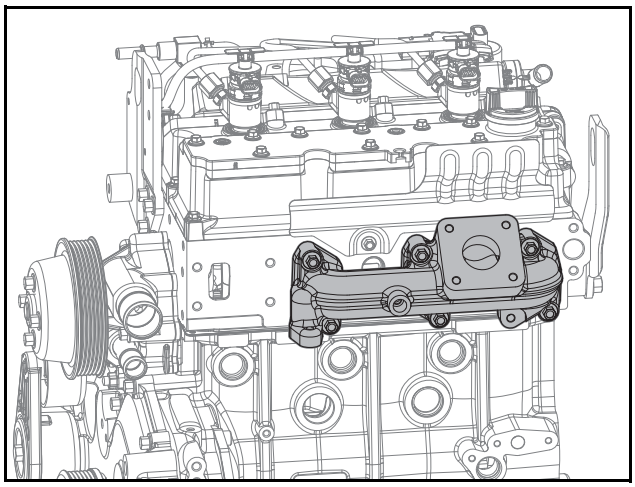

ED18190055

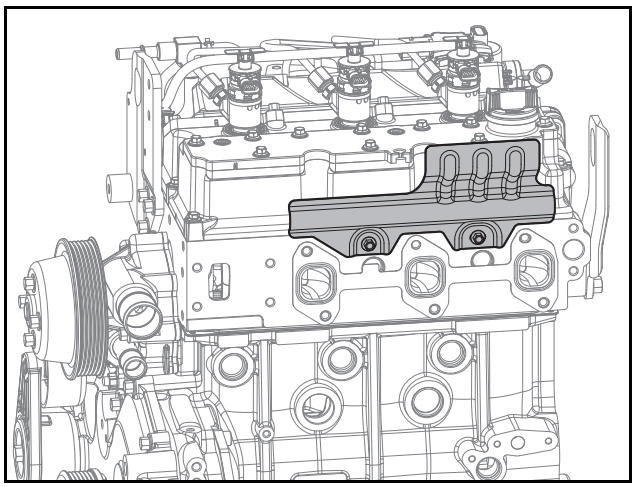

ED18190088

1) Loosen 6 flange hex bolts.
2) Remove the exhaust manifold and the gasket.
3) Loosen 2 flange hex bolts.
4) Remove the heat shield.

⚠ CAUTION

Exhaust gas make engine parts extremely hot. Only remove the parts when they have fully cooled to prevent burns.

Assembly of Exhaust Manifold

1. Attach the heat screen.

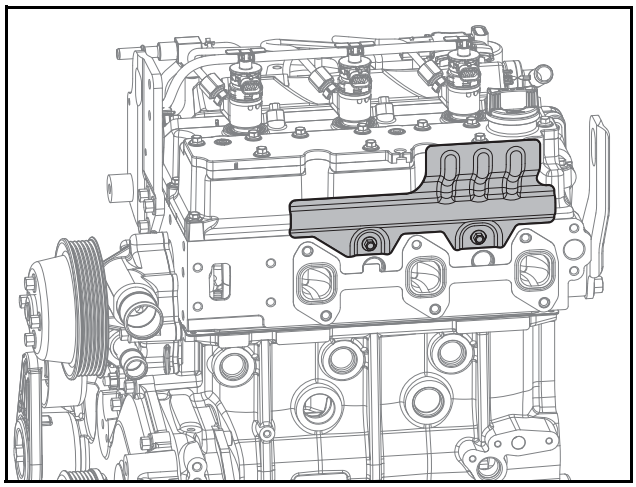

ED18190088

1) Mount the heat screen.
2) Tighten 2 flange hex bolts at a tightening torque 1.25 ±0.1 kgf·m.

⚠ CAUTION

- **Be careful to note the direction in which the gasket is mounted. Mount the gasket so that the TOP mark faces the front of the engine.**
- **Be careful not to damage the gasket while mounting it.**

2. Attach the exhaust manifold.

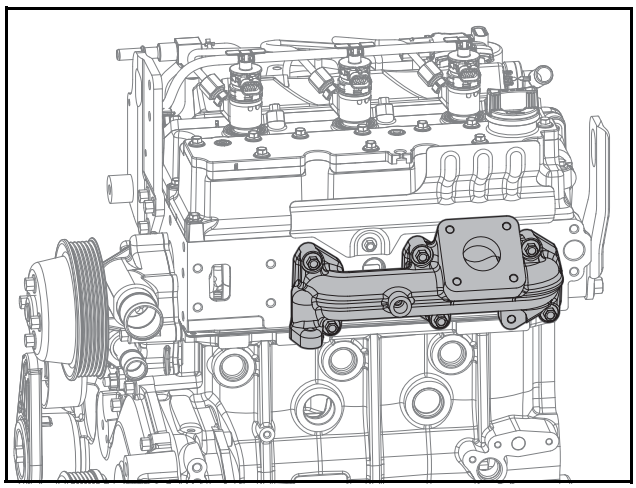

ED18190055

1) Mount the gasket so that the TOP mark faces the top surface and the front of the engine.
2) Attach the exhaust manifold.
3) Apply torque as follow below sequence.
   - Tightening torque: 3.4 ±0.3 kgf·m.
4) Apply check torque as follow below sequence again.
   - Tightening torque: 3.4 ±0.3 kgf·m.

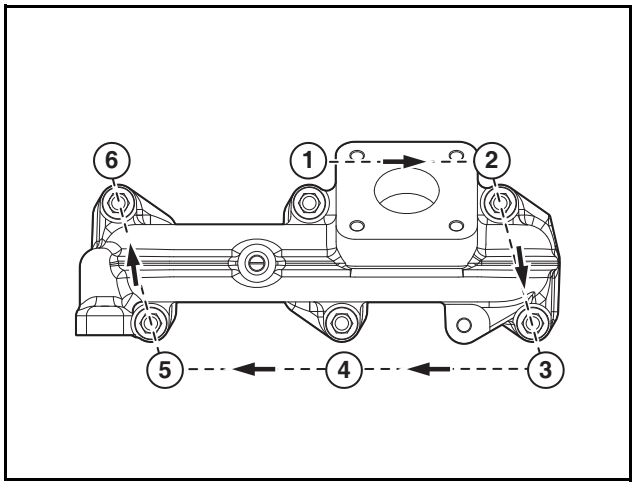

EDM01200172

3. Mount the thermostat.

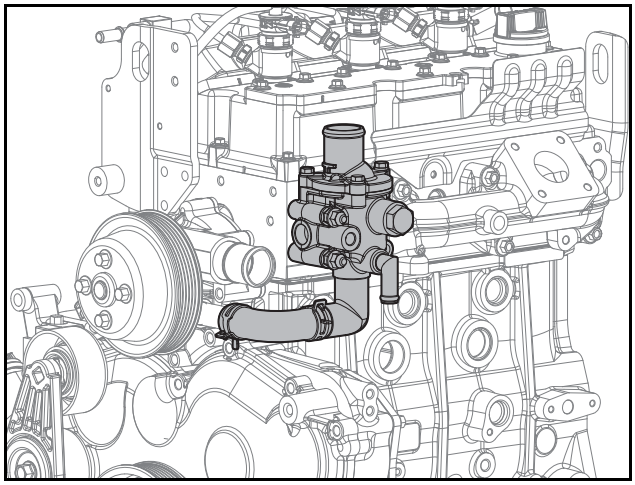

ED18190054

1) Mount the thermostat to the cylinder head.
2) Tighten 2 flange hex bolt, 2 space bolt and 2 flange hex nut as a tightening.
3) Tighten 3 flange hex bolts at a tightening torque of 2.2 kgf·m.
4) Connect the rubber hose.
5) Mount the hose clamps.

⚠ CAUTION

- **After mounting the hose clamps, make the protrusion face the cylinder head side to prevent interference between the protrusion and the coolant pump pulley.**
- **Do not use the hose clamps more than twice; replace them with new ones.**

4. Attach the EGR cooler.

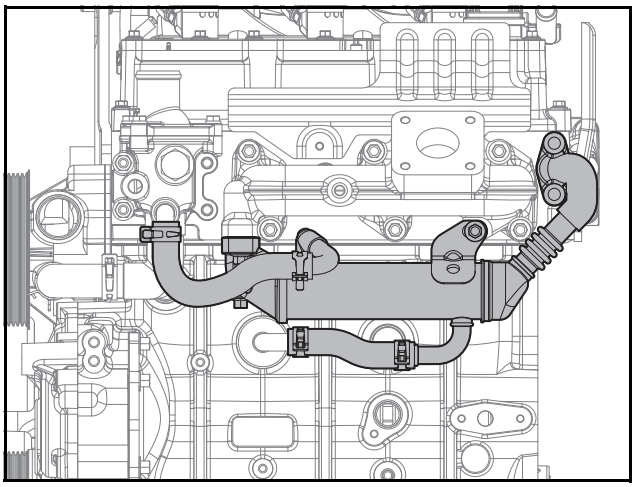

ED18190053

⚠ CAUTION

- **Be careful to note the direction when mounting the EGR cooler.**
- **Be careful not to damage the gasket while mounting it.**

1) Mount the EGR cooler and gaskets to the exhaust manifold and cylinder head.
2) Tighten 3 flange hex bolts at a tightening torque of 3.1 kgf·m. (exhaust manifold side)
3) Tighten 2 flange hex bolts at a tightening torque of 2.2 kgf·m. (cylinder head side)
4) Assemble 2 hoses and clamps.

⚠ CAUTION

Do not reuse the clamps if it has permanent deformation by irregular shape.

5. Assemble the turbocharger.

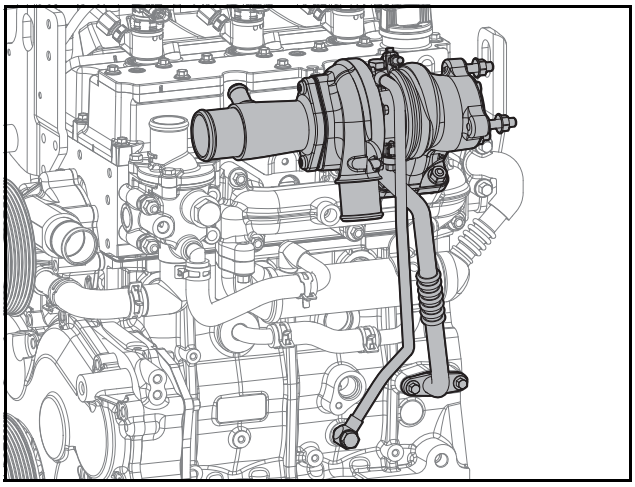

ED18190052

1) Connect the oil return pipe and gasket to the turbocharger.
2) Tighten 2 flange hex bolts at a tightening torque of 1.25 ±0.12 kgf·m.
3) Mount the turbocharger and the gasket to the exhaust manifold.

⚠ CAUTION

- **Be careful to note the direction when mounting the gasket.**
- **Be careful not to damage the gasket while mounting it.**
- **Do not reuse gaskets; replace them with new ones.**

4) Tighten 4 flange hex nuts at a tightening torque of 2.2 kgf·m.
5) Assemble the gasket between oil return pipe and cylinder block. Tighten 2 flange hex nuts at a tightening torque of 1.0 kgf·m.

⚠ CAUTION

Do not reuse the clamp if it has permanent deformation by irregular shape.

6) Temporary tighten 2 hollow screws to the oil delivery pipe manually.
7) Tighten 2 hollow screws at a tightening torque of 1.9 kgf·m.

⚠ CAUTION

- **Do not reuse the oil supply pipe.**
- **Tighten the hollow screw at the cylinder block side first, and then tighten the other at the turbocharger side.**

Note) During assembly, add 3 cc of clean oil to the turbocharger oil inlet.

6. Connect the breather hose.

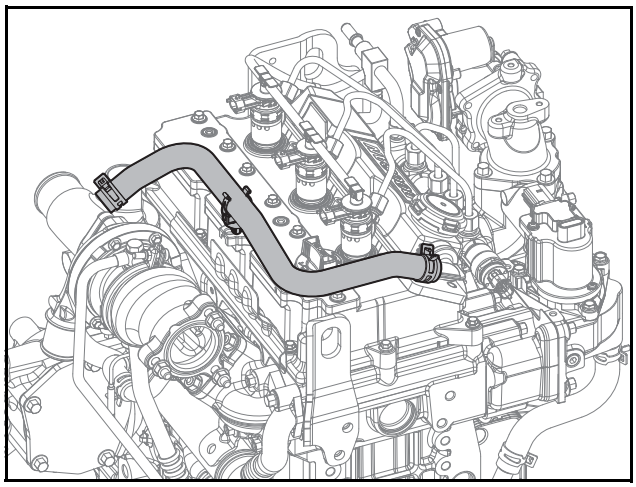

ED18190050

1) Connect the breather hose.
2) Mount the hose clamps.

⚠ CAUTION

Do not reuse the clamp if it has permanent deformation by irregular shape.

10. Cylinder block/head

General information 175
General Information 175
Cylinder block 176
Disassembly of Cylinder Block..... 176
Assembly of Cylinder Block 176
Check of Cylinder Block..... 176
Measurement of Inside Diameter of Main Bearing Bore of Cylinder Block 176
Measurement of Inside Diameter of Piston Bore of Cylinder Block 177
Measurement of Inside Diameter of Camshaft Bearing of Cylinder Block 177
Cylinder head 178
Disassembly of Cylinder Head 178
Assembly of Cylinder Head..... 178
Check of Cylinder Head 178
Valve 179
Disassembly of Valve..... 179
Assembly of Valve 179
Measurement of Inside Diameter of Valve Guide 179
Measurement of Valve Stem End 179
Measurement of Valve Step Height 180
Measurement of Gap between Piston and Valve..... 180
Check of Valve Spring 181
Rocker arm 182
Disassembly of Rocker Arm..... 182
Assembly of Rocker Arm 187
Check of Rocker Arm Shaft 195
Check of Rocker Arm..... 195
Tappet and push rod 197
Disassembly of Valve Tappet 197
Assembly of Valve Tappet 197
Check of Valve Tappet..... 197
Disassembly of Push Rod..... 197
Assembly of Push Rod..... 203
Check of Warpage of Push Rod 211
Camshaft 212
Disassembly of Camshaft 212
Assembly of Camshaft 212
Measurement of Camshaft Journal Outside Diameter..... 212

Measurement of Camshaft 213
Timing gear case 214
Detaching Timing Gear Case 214
Assembly of Timing Gear Case 215
Flywheel housing 217
Disassembly of Flywheel Housing 217
Assembly of Flywheel Housing 217
Breather 219
Disconnection of Breather Hose 219
Connection of Breather Hose 219
Cylinder head cover 220
Disassembly of Cylinder Head Cover 220
Assembly of Cylinder Head Cover 222
Idle gear 226
Disassembly of Idle Gear 226
Assembly of Idle Gear 227
Measurement of Outside Diameter of Idle Gear Shaft 230
Measurement of Inside Diameter of Idle Gear 230
Lifting hook 231
Disassembly of Lifting Hook 231
Assembly of Lifting Hook 232

General information

General Information

Hyundai Doosan Infracore diesel engine is an air-cooled electronic control diesel engine that uses cooling fans, overhead valve, and turbocharger.
The high-pressure fuel generated from the fuel high-pressure pump is stored in the common rail. When a driver operates the vehicle, fuel injection timing and optimum fuel amount are decided based on the data set in the Electronic Control Unit (ECU) and the solenoid valve of the injector installed in each engine cylinder is operated to inject fuel into the cylinder.
The cylinder block is made out of cast iron alloy and an anti-vibration and anti-noise crank case is mounted. In addition, the cylinder block and the timing gear case are designed as an integral structure to reduce the engine length and improve tightness. The cylinder head is an integral structure, too.
The forged crankshaft is an integral structure. The oil seals of the crankshaft and the Drive Plate prevents oil from permeating into the Drive Plate housing.
The connecting rod is forged and its big end part vertically separated. Like a piston, the connecting rod can be disassembled through the upper side of the cylinder. The alloy-type prefabricated bearing is used for the active part of the crankshaft and the connecting rod.

Cylinder block

Disassembly of Cylinder Block

1. Detach the cylinder block.

Note) Refer to Chapter 5 (Procedure of Disassembling an Engine)

Assembly of Cylinder Block

1. Attach the cylinder block.

Note) Refer to Chapter 5 (Procedure of Assembling an Engine)

Check of Cylinder Block

1. Cleanse the cylinder block and check if there is any cracked or damaged part with naked eye.
2. Replace the cylinder block if it is seriously cracked or damaged. Repair tiny cracks if existing.
3. Check if the oil path or coolant path is clogged or corroded.
4. Perform the hydrostatic test to check whether there is a crank or an air leakage.
5. Block the discharging outlets of the cooling water path and the oil path of the cylinder block and put pressure of 4 kg/cm^2 on the inlet. Then sink the cylinder block in the 70°C water for 1 minute and check if air leaks.

Measurement of Inside Diameter of Main Bearing Bore of Cylinder Block

1. Assemble the cylinder block and the crank case.
2. Set the gauge.
3. Remove the foreign substances from the main bearing bore of the cylinder block.
4. Measure the inside diameter of the main bearing bore of the cylinder block.

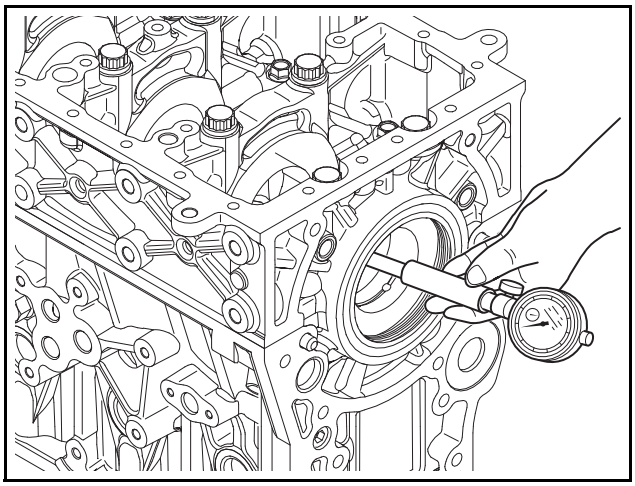

EDL022084A

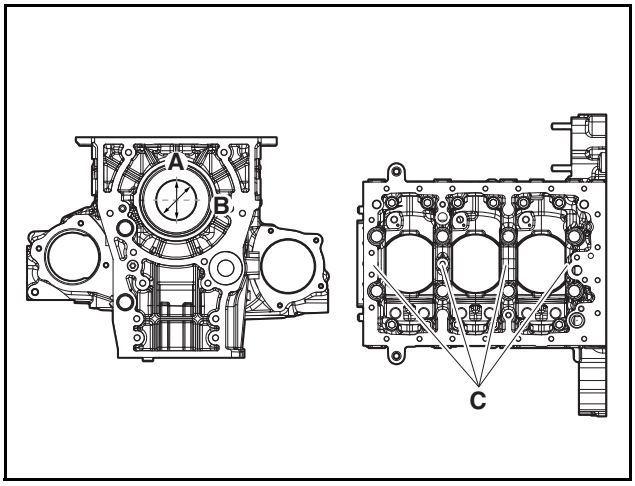

ED18190022

1) For 4ea main bearings (C) of the cylinder block, measure 8 points of the bearings: front and rear.
2) Measure three (A, B) points of the main bearing part of the cylinder block.
3) The standard measurement value of the inside diameter of the main bearing bore of the cylinder block is within the range of 62.0 ~ 62.021 mm.

Item	Specified Value
Cylinder Block Inside diameter of main bearing bore	62.0 ~ 62.021 mm

Measurement of Inside Diameter of Piston Bore of Cylinder Block

1. Set the gauge.
2. Remove the foreign substances from the piston bore of the cylinder block.
3. Measure the inside diameter of the piston bore of the cylinder block.

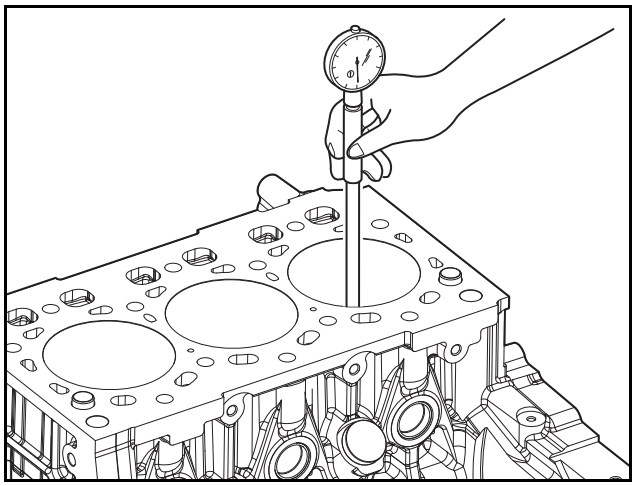

ED18190023

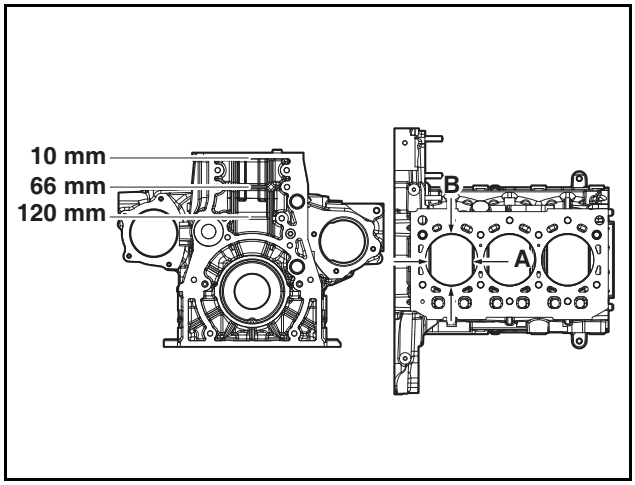

ED18190025

1) For 3ea piston bores of the cylinder block, measure total 9 points of the piston bores: top, middle, and bottom.
2) Measure 2 points of A and B on the piston bore of the cylinder block.
3) The standard measurement value of the inside diameter of the piston bore of the cylinder block is within the range of 89.990 ~ 90.010 mm.

Item	Specified Value
Cylinder Block Piston bore inside diameter	89.990 ~ 90.010 mm

Measurement of Inside Diameter of Camshaft Bearing of Cylinder Block

1. Set the gauge.
2. Remove the foreign substances from the camshaft bearing shell of the cylinder block.
3. Measure the inside diameter of the camshaft bearing of the cylinder block.

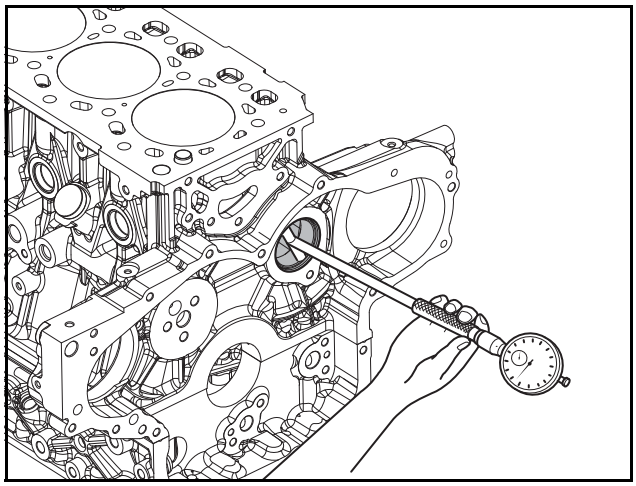

ED18190026

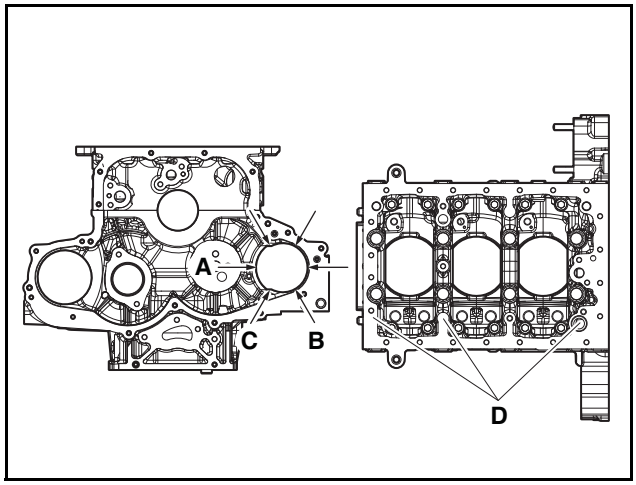

ED18190027

1) Measure a total of 6 places at the front and rear of 3 camshaft bearing shells (D) on the cylinder block.
2) Measure 3 points (A, B, and C) of camshaft bearing shells of the cylinder block.
3) The standard measurement value of the inside diameter of the camshaft bearing of the cylinder block is within the range of 45.0 ~ 45.025 mm.

Item	Specified Value
Cylinder Block Camshaft bearing inside diameter	45.0 ~ 45.025 mm

Cylinder head

Disassembly of Cylinder Head

1. Detach the cylinder head.

Note) Refer to Chapter 5 (Procedure of Disassembling an Engine)

Assembly of Cylinder Head

1. Attach the cylinder head.

Note) Refer to Chapter 5 (Procedure of Assembling an Engine)

Check of Cylinder Head

1. Remove carbon from the bottom surface of the cylinder head.

Note) Be careful not to scratch the valve seat surface.

2. For cracks or damage which cannot be checked with naked eye, perform the hydrostatic test or the magnetic particle testing.
3. Check if the cylinder head is warped.

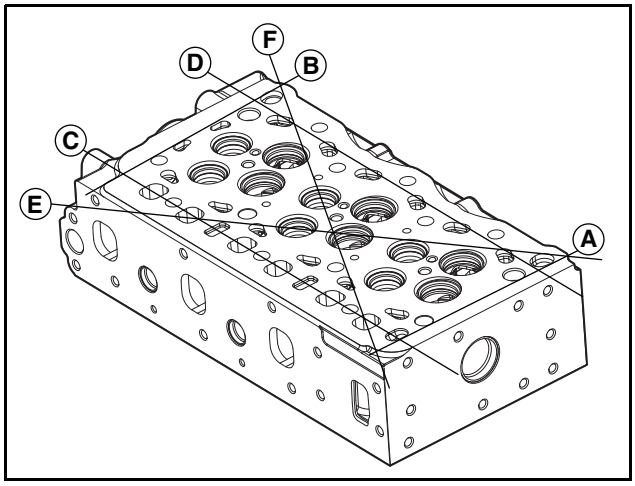

ED18190028

1) Check 6 directions from A to F with the scale and the gap gauge.

4. Check flatness of the cylinder head.

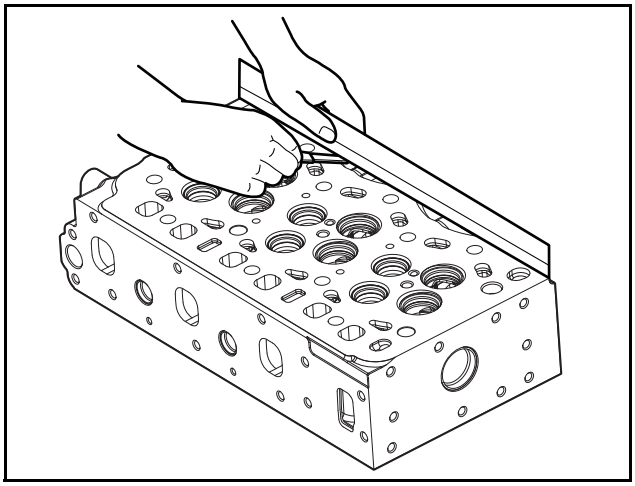

ED18190029

1) Measure flatness of the intake assembly surface and the exhaust assembly surface of the cylinder head with the scale and the gap gauge.

5. Perform the hydrostatic test.

1) Block the discharging outlets of the cooling water path and the oil path of the cylinder head and put pressure of 4 kg/cm^2 on the inlet. Then sink the cylinder head in the 70°C water for 1 minute and check if air leaks.

Valve

Disassembly of Valve

1. Remove the valve.

Note) Refer to Chapter 5 (Procedure of Disassembling an Engine)

Assembly of Valve

1. Mount the valve.

Note) Refer to Chapter 5 (Procedure of Assembling an Engine)

Measurement of Inside Diameter of Valve Guide

1. Mount the valve guide to the cylinder head.
2. Set the meter.
3. Measure the inside diameter of the valve guide.

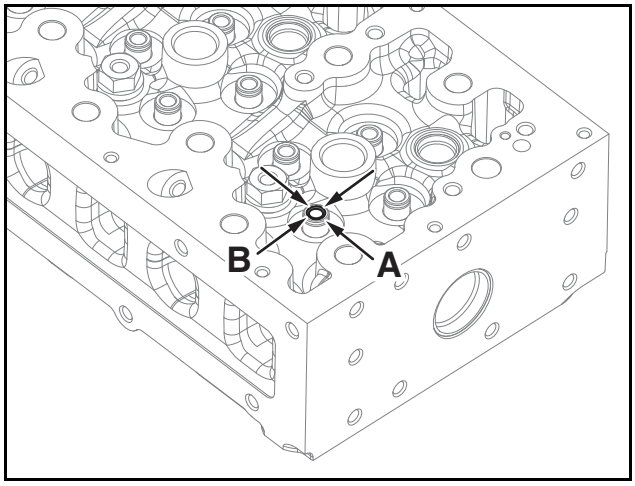

ED18190030

1) Measure total 6 points of the valve guide to the vertical direction (B) and the horizontal direction (A): top, middle, and bottom.
2) Measure 16ea valves; 8ea intake valves and 8ea exhaust valves.
3) The standard measurement value of the valve guide inside diameter is within the range of 7.0 ~ 7.015 mm.

Item	Specified Value
Valve guide inside diameter	7.0 ~ 7.015 mm

Measurement of Valve Stem End

1. Mount the valve to the cylinder head.
2. Perform the zero point adjustment of the meter.
3. Measure the valve stem end (A).

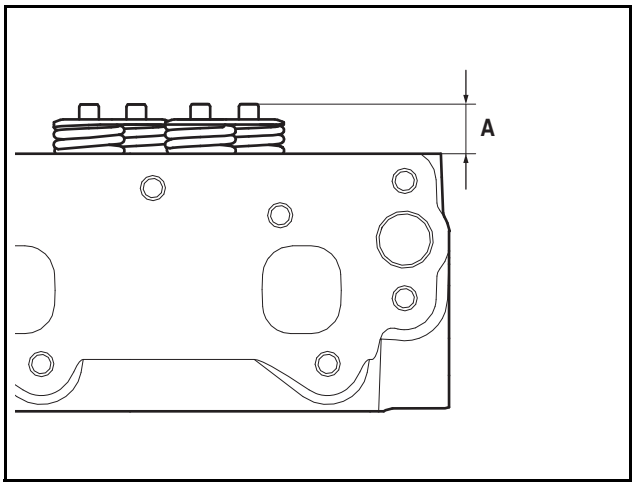

EDL022093A

1) Measure 8ea intake valve stem ends.
2) The standard measurement value of the intake valve stem end is within the range of 17.0 ~ 17.5 mm.
3) Measure 8ea exhaust valve stem ends.
4) The standard measurement value of the exhaust valve stem end is within the range of 17.1 ~ 17.6 mm.

Item	Specified Value
Intake valve stem end	17.0 ~ 17.5 mm
Exhaust valve stem end	17.1 ~ 17.6 mm

Measurement of Valve Step Height

1. Measure the height of the contact surface of the intake and exhaust valve. If the measurement value is over the allowable limit, it means that the valve seat is worn. Replace the valve seat.
2. Measure the valve step height.

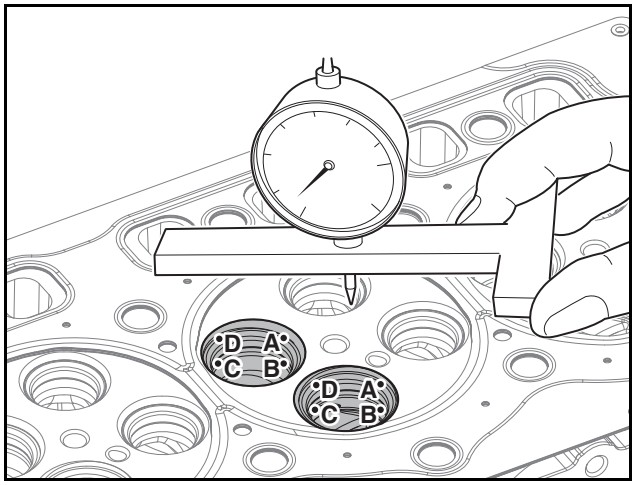

ED18190039

1) Put the valves in the valve seat of the cylinder head and measure how deep the valves have been put from the cylinder head bottom surface with the dial gauge.
2) Measure 4 points (A, B, C, and D) of the valve.
3) The standard measurement value of the intake valve is within the range of 0.6 ~ 0.9 mm.
4) The standard measurement value of the exhaust valve is within the range of 0.9 ~ 1.2 mm.

Item	Specified Value
Intake Valve Step Height	0.6 ~ 0.9 mm
Exhaust Valve Step Height	0.9 ~ 1.2 mm

Measurement of Gap between Piston and Valve

1. Detach the cylinder head.
2. Prepare measurement of the gap between the piston and the valve.

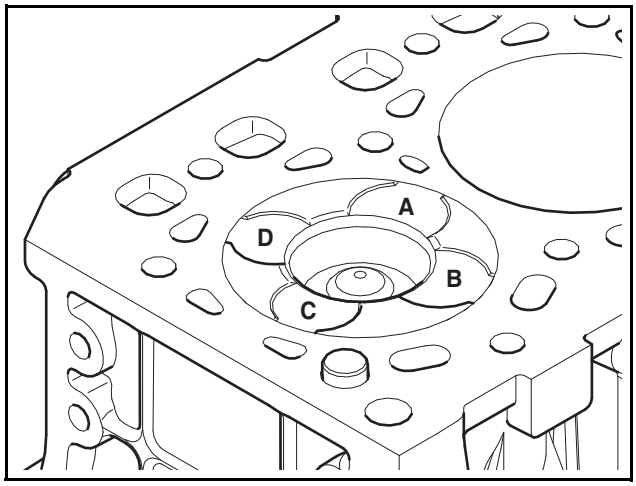

EDL022095A

1) Prepare the lead with thickness of 3 mm.
2) Position the greased lead on total 16 points (A, B, C, and D) on the top of each piston.
3) Attach the cylinder head.
4) Rotate the crankshaft pulley in order to move the piston.
5) Detach the cylinder head.

3. Measure the gap between the piston and the valve.

1) Measure thickness of the lead with the vernier calipers.
2) The standard value of gap between the piston and the intake valve is within the range of 1.12 ~ 2.29 mm.
3) The standard value of gap between the piston and the exhaust valve is within the range of 1.44 ~ 2.58 mm.

Item	Specified Value
Gap between the piston and the intake valve	1.32 ~ 2.33 mm
Gap between the piston and the exhaust valve	1.44 ~ 2.58 mm

Check of Valve Spring

1. Check the exterior of the valve spring with naked eye.

1) Check if the exterior of the valve spring is damaged with naked eye. Replace it with a new one if required.

2. Check the free length of the valve spring.

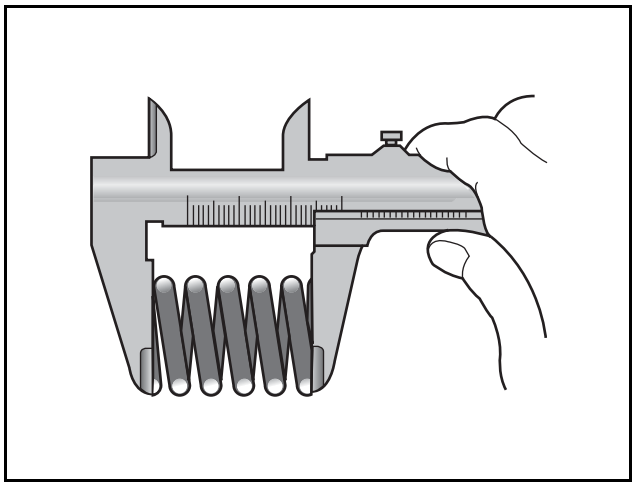

EDL022096A

1) Measure the free length of the valve spring with the vernier calipers.

Note) If the length is too small, replace the valve spring with a new one.

3. Check the valve spring squareness.

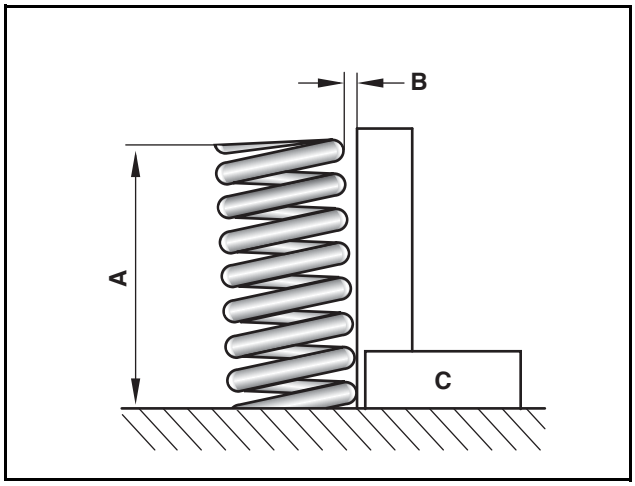

EDL022097A

A. Free length B. Squareness C Right-angle square

1) Measure the squareness of the valve spring with the surface plate and the right-angle square.

Note) If the measurement value is abnormal, replace the valve spring with a new one.

4. Check the tension of the valve spring.

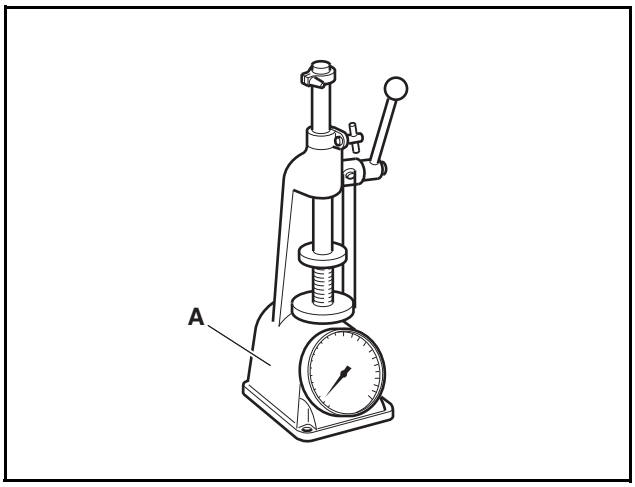

EDL022098B

1) Measure the tension of the valve spring with the spring tester (A).

Note) If the measurement value is abnormal, replace the valve spring with a new one.

Rocker arm

Disassembly of Rocker Arm

1. Disconnect the breather hose.

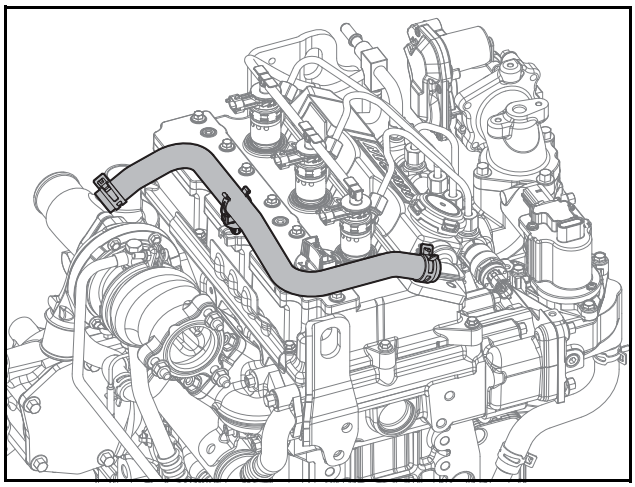

ED18190050

1) Remove the hose clamps.
2) Disconnect the breather hose.
2. Disconnect the throttle (inlet pipe) and the intake stake.

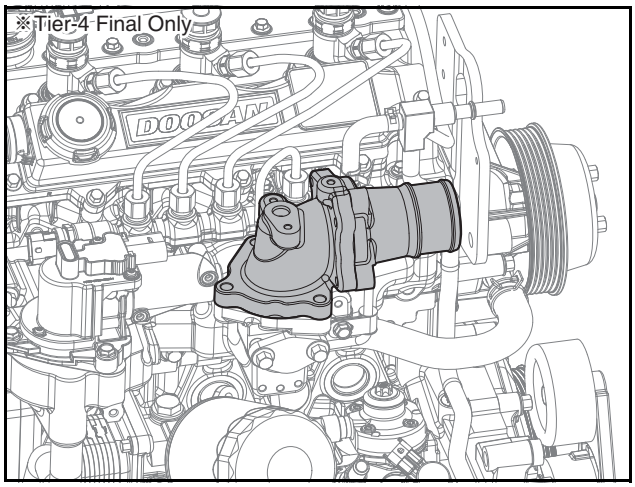

ED18190180

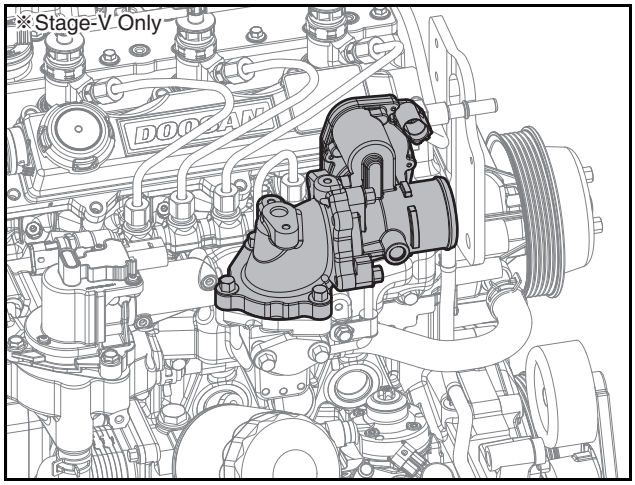

ED18190051

1) Loosen 3 hex bolts.
2) Remove the throttle (inlet pipe) and the gaskets from the intake stake.
3) Loosen 3 hex bolts.
4) Remove the intake stake from the intake manifold.
3. Disconnect oil level gauge and coolant hose.

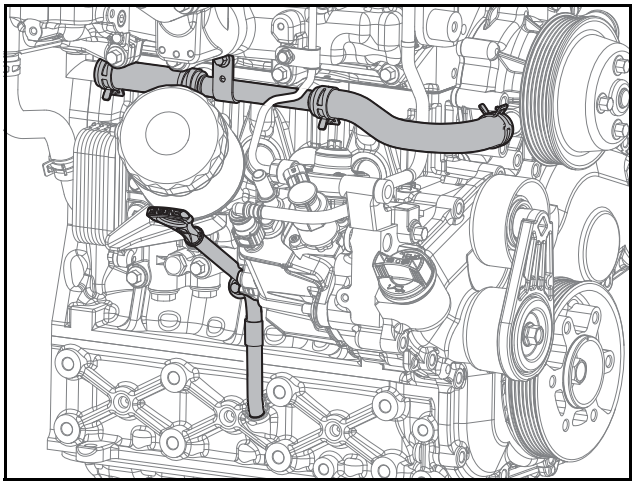

ED1819089

1) Loosen the flange hex bolt.
2) Remove the hose clamp.
3) Disconnect the coolant hose.
4) Remove the oil level gauge.
5) Loosen the flange hex bolt.
6) Disconnect the oil level gauge guide tube.
4. Remove the turbocharger.

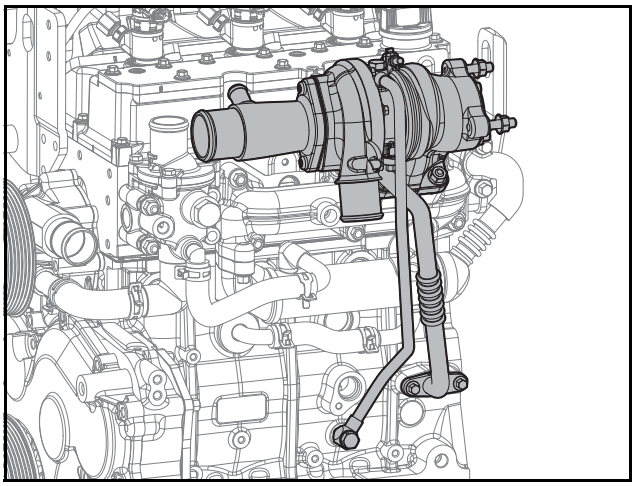

ED18190052

1) Loosen 2 hex bolts and remove the heat screen. (if needed)
2) Loosen 2 hollow screws and disconnect the oil delivery pipe.
3) Loosen 4 flange hex bolts.
4) Disconnect the oil return pipe.
5) Loosen 4 flange hex nuts.
6) Remove the turbocharger and the gasket.

5. Remove the EGR cooler.

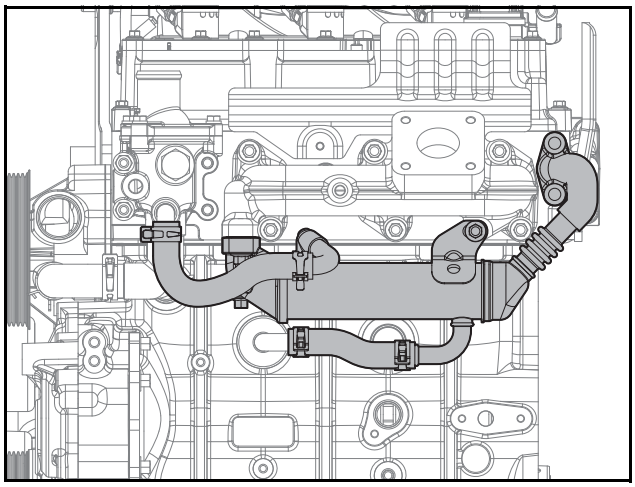

ED18190053

1) Remove the hose clamp.
2) Disconnect 2 hose.
3) Loosen 5 flange hex bolt.
4) Remove EGR cooler and 2 gasket.

⚠ CAUTION

Exhaust gas make engine parts extremely hot. Only remove the parts when they have fully cooled to prevent burns.

6. Remove the thermostat.

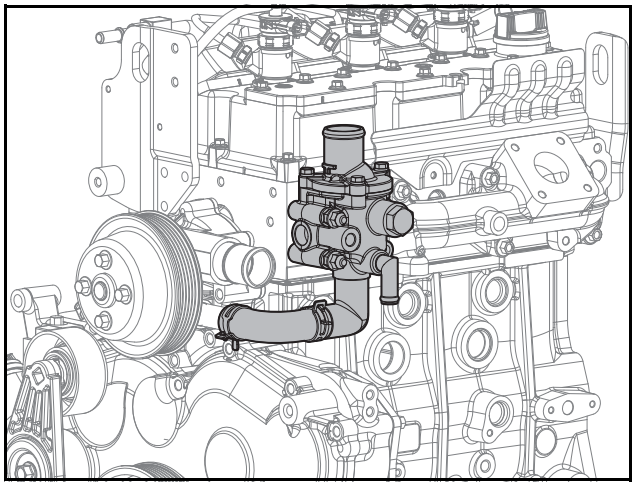

ED18190054

1) Remove the hose clamps.
2) Disconnect the rubber hose.
3) Loosen 2 flange hex bolt, 2 space bolt and 2 flange hex nut.
4) Remove thermostat.

7. Remove the exhaust manifold.

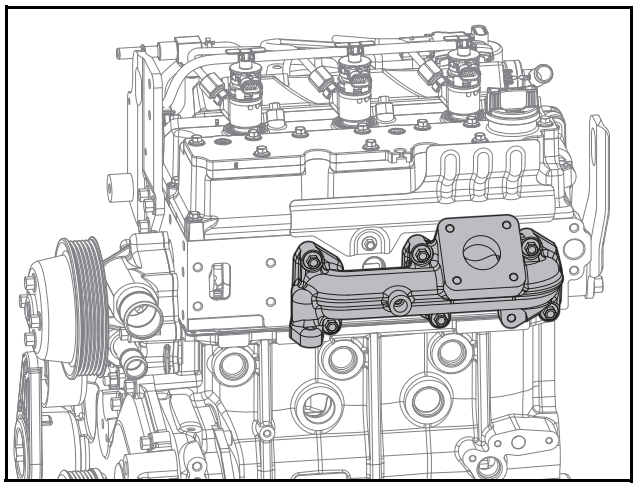

ED18190055

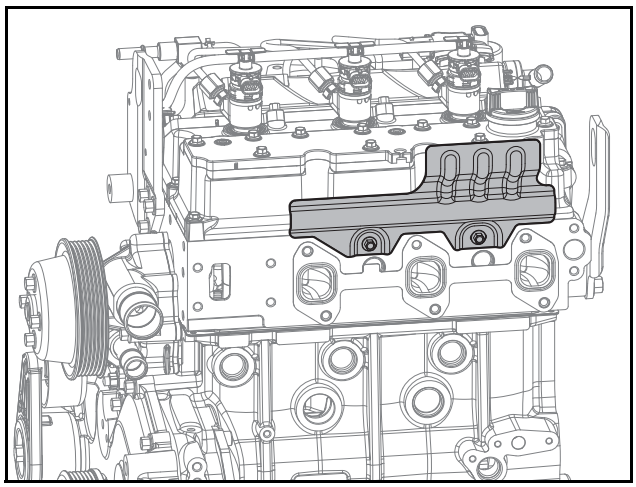

ED18190088

1) Loosen 6 flange hex bolts.
2) Remove the exhaust manifold and the gasket.
3) Loosen 2 flange hex bolts.
4) Remove the heat shield.

⚠ CAUTION

Exhaust gas make engine parts extremely hot. Only remove the parts when they have fully cooled to prevent burns.

8. Remove the coolant pump pulley.

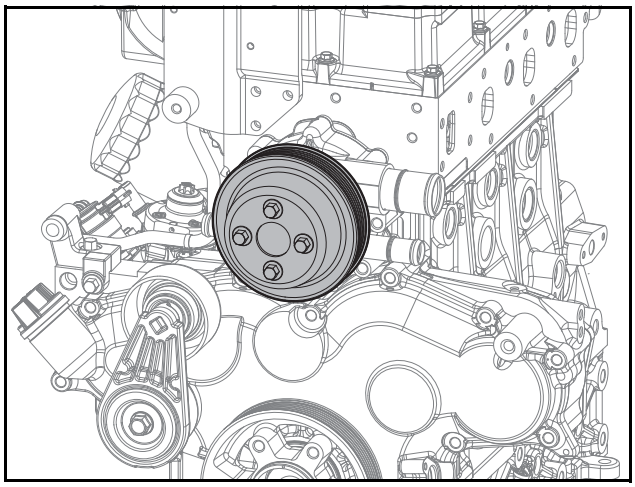

ED18190056

1) Loosen 4 hex bolts.
2) Remove the coolant pump pulley.

9. Remove the coolant pump.

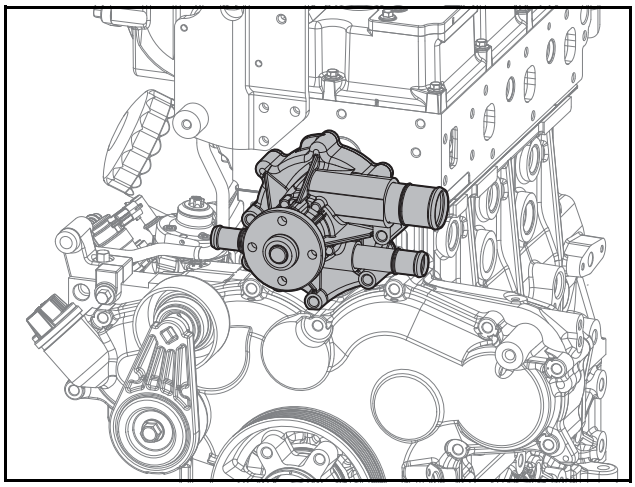

ED18190057

1) Loosen 4 hex bolt and 2 flange hex nut.
2) Remove the coolant pump and the gasket.

10. Remove the lifting hooks.

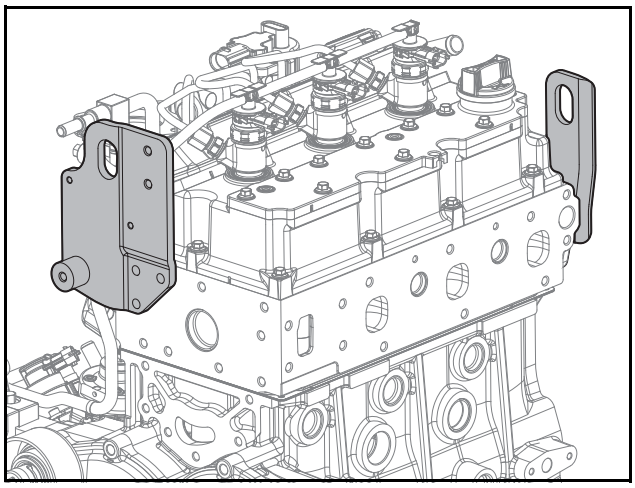

ED18190058

1) Loosen flange bolt.
2) Remove the lifting hooks.

11. Disconnect the fuel return hose.

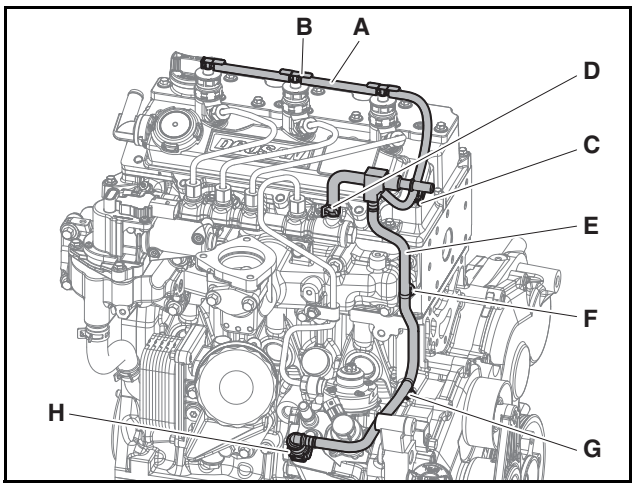

ED18190059

1) Open the adopter (B) of injector return hose (A).
2) Loosen the injector return hose (A).
3) Remove the edge clip (C).
4) Loosen the hose clamp (D).
5) Remove the cable tie (F), (C).
6) Disconnect the quick connector (H).
7) Disassemble the fuel return hose (A) and (E).

12. Disconnect the fuel injection pipes.

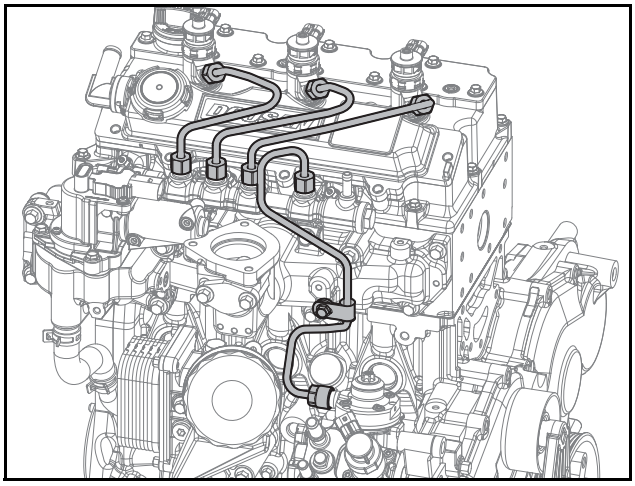

ED18190060

1) Loosen the nuts connected to the injector and the common rail.
2) Disconnect the fuel injection pipes.
3) Loosen the nuts connected to the common rail and the fuel injection pump.

4) Disconnect the fuel injection pipes.

⚠ CAUTION

Do not reuse fuel injection pipes and clamp; replace them with new ones.
If fuel injection pipes and clamp are reused it may allow foreign substances into the fuel pipes or cause oil leaks from bolt clamping and cause a critical fault in engine performance.

13. Detach the common rail.

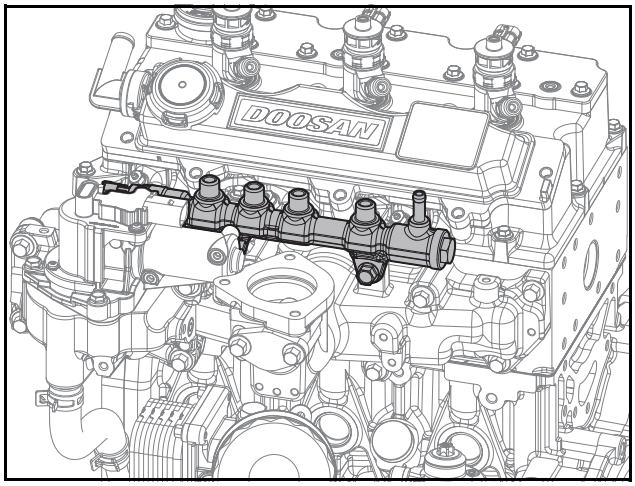

ED18190061

1) Loosen 2 hex bolts.
2) Remove the common rail from the intake manifold.

14. Disconnect the EGR valve.

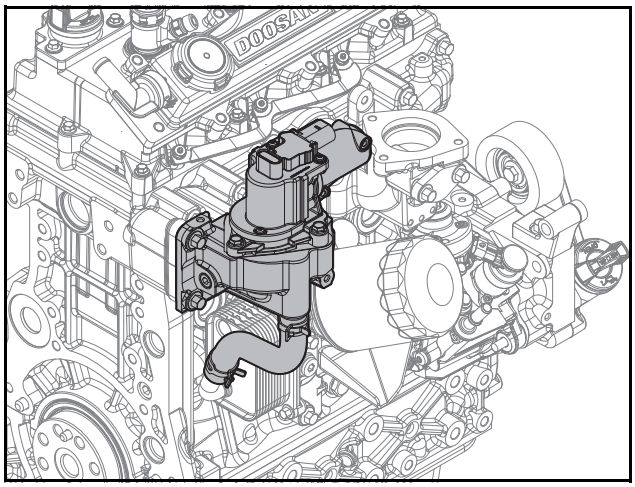

ED18190062

1) Remove the hose clamps.
2) Disconnect the hose.
3) Loosen 4 flange hex bolt.
4) Remove EGR valve and gasket.

15. Detach the oil cooler and the oil filter module.

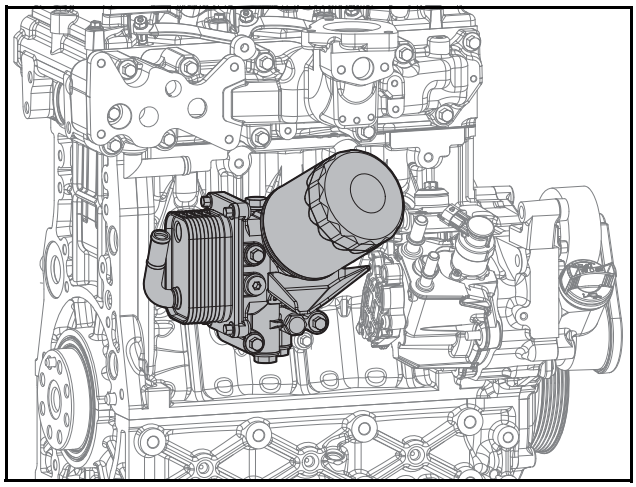

ED18190063

1) Detach the oil filter with the filter wrench.

⚠ CAUTION

Oil in the filter may run down while detaching the oil filter. Be careful not to contaminate the other parts by using a cloth when detaching the filter. After replacing the oil filter, wipe clean any other parts which the oil has touched.

2) Remove the oil filter module and the O-rings.
3) Loosen 3 flange hex bolts.
4) Remove the oil cooler and the O-rings from the oil filter module.

16. Remove the intake manifold.

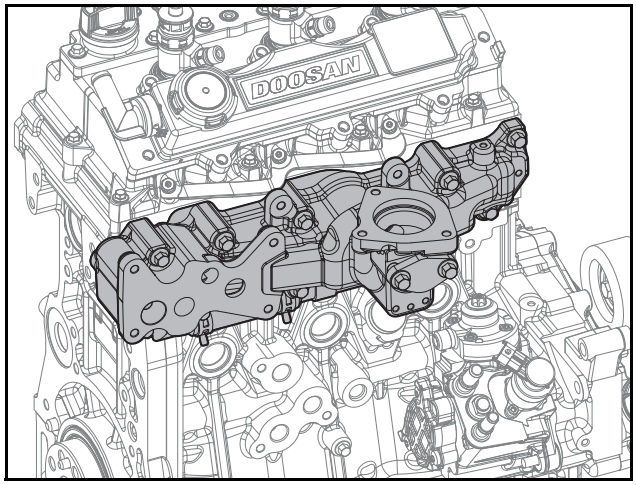

ED18190064

1) Loosen 13 flange hex bolt.
2) Remove the intake manifold and the gasket.
3) Loosen 2 flange hex bolts.
4) Remove EGR mixer and gasket.

17. Remove the right cylinder head cover.

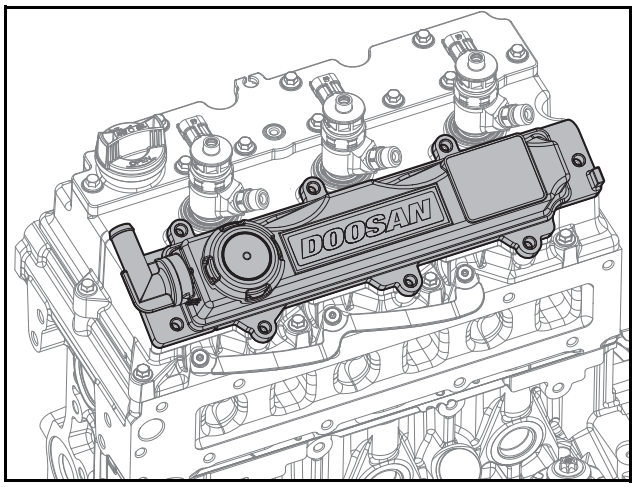

ED18190065

1) Loosen 8 flange hex bolts.
2) Remove the right cylinder head cover.

18. Remove the injector.

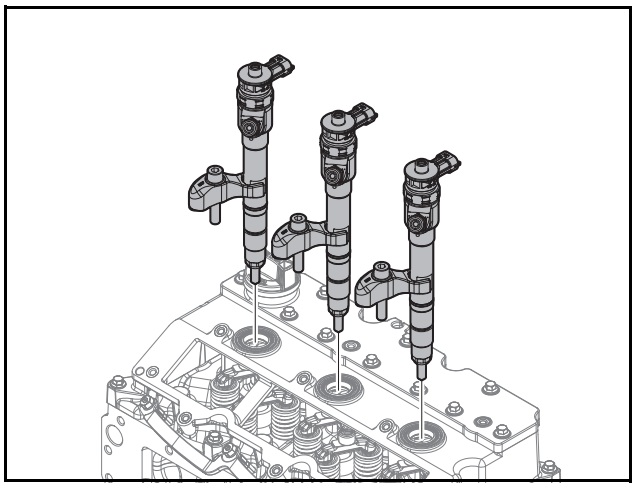

ED18190066

1) Loosen 3 hex bolts.
2) Remove 3 injector fixtures.
3) Remove 3 injectors.

Note) Remove the cylinder head cover and remove the injector seal ring washers.

⚠ CAUTION

- **Be careful not to damage the injector oil seal of the cylinder head cover.**
- **Remove it by turning the injector slowly from left to right.**
- **Do not reuse the injector seal ring washers. Reuse of the injector seal ring washers may cause critical damage to the engine due to unstable combustion.**

19. Disconnect the glow plugs.

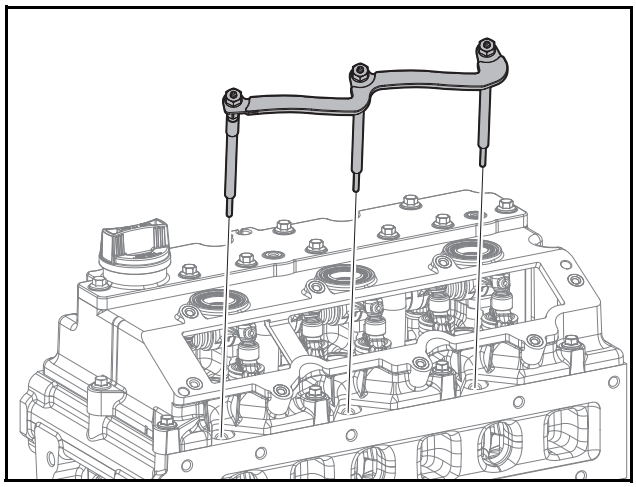

ED18190067

1) Loosen 3 hex nuts.
2) Remove the electric connector.
3) Disconnect 3 glow plugs.

20. Remove the cylinder head cover.

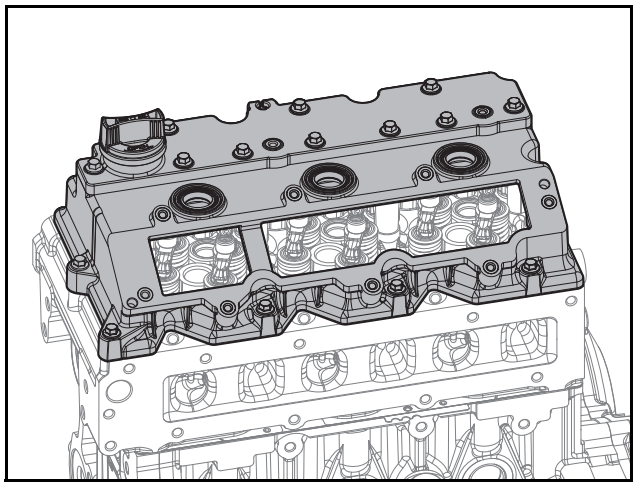

ED18190068

1) Loosen 10 hex bolts.
2) Remove the cylinder head cover.

21. Remove the rocker arm.

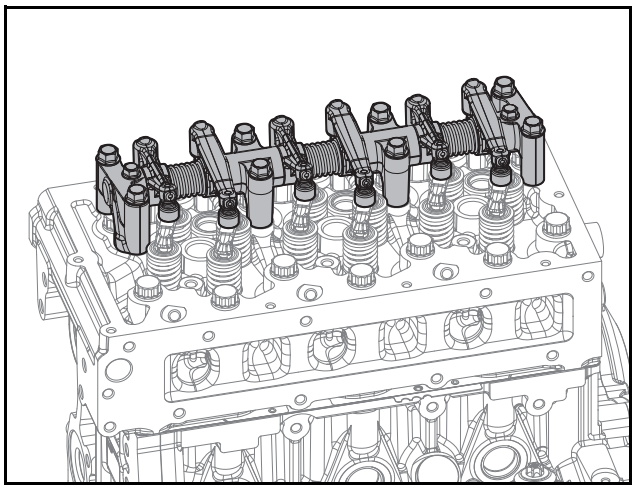

ED18190069

1) Loosen 8 flange hex bolts.
2) Remove the rocker arm.

Assembly of Rocker Arm

1. Attach the rocker arm.

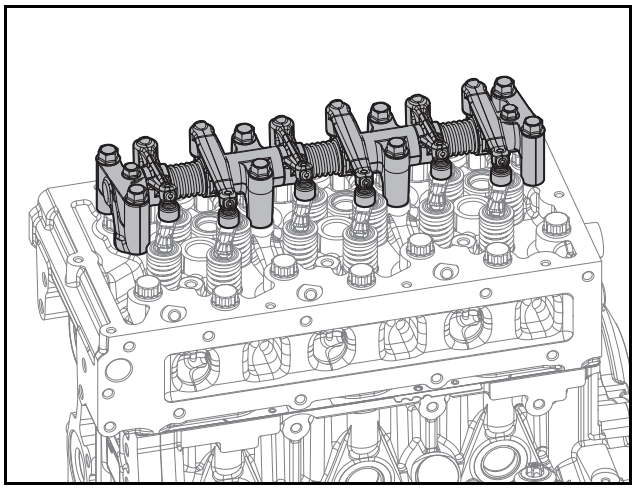

ED18190069

1) Attach the rocker arm.
2) Tighten 8 flange hex bolts at a tightening torque of 2.2 ±0.22 kgf·m.

2. Attach the cylinder head cover.

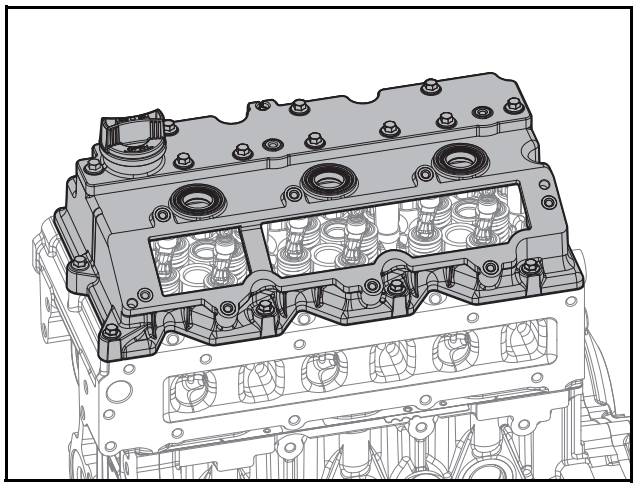

ED18190068

1) Attach the cylinder head cover.
2) Temporarily tighten 10 hex bolts.
3) Tighten 10 hex bolts at a tightening torque of 1 ±0.1 kgf·m.

⚠ CAUTION

- **Be careful not to allow the seal ring of the cylinder head cover to get out to the outside.**
- **Tighten the hex bolts of the cylinder head cover in the order. The front engine direction is the water pump direction and the rear engine direction is the Drive Plate direction.**

4) Mount the oil injection cap.

3. Connect the glow plugs.

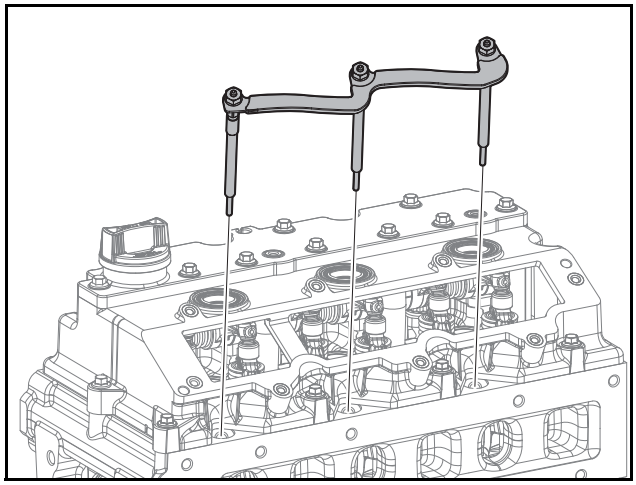

ED18190067

1) Tightening 3 glow plugs to the cylinder head at a tightening torque of 9 ~ 12 N·m.
2) Attach the electric connector.
3) Mount 3 washers.
4) Tighten 3 hex nuts at a tightening torque of 1.3 ~ 2 N·m.

4. Attach the injectors.

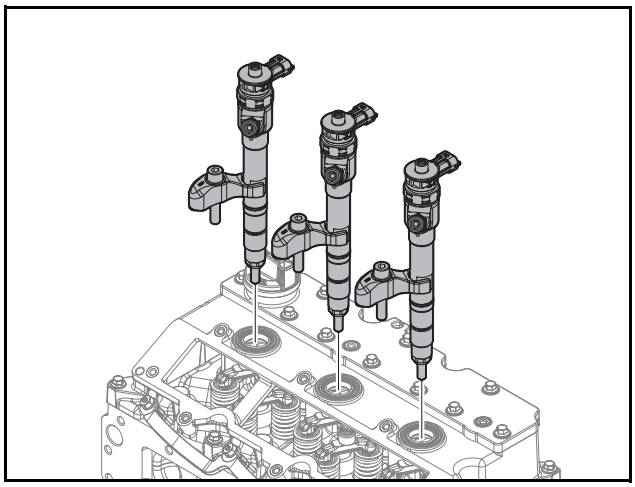

ED18190066

1) Align the injector seal ring washer with the center of the injector hole and mount it.
2) Sufficiently apply engine oil on the cylinder head cover surface where the injectors contact.
3) Attach 3 injectors.

⚠ CAUTION

- **Do not reuse the head cover rubber seal and the injector oil seal but replace with new ones.**
- **Attach injectors by slowly turning them to prevent damage to the cylinder head cover surface which contacts the injectors.**
- **Do not reuse the injector seal ring washers. Otherwise, critical damage to the engine may occur because of unstable combustion.**

4) Mount 3 injector fixtures.
5) Temporarily tighten 3 hex bolts.

⚠ CAUTION

Do not tighten the hex bolts by force when it is difficult to tighten them temporarily. Forced tightening may cause damage to the cylinder head.

6) Tighten 3 hex bolts at a tightening torque of 4.35 ±0.35 kgf·m.

5. Attach the right cylinder head cover.

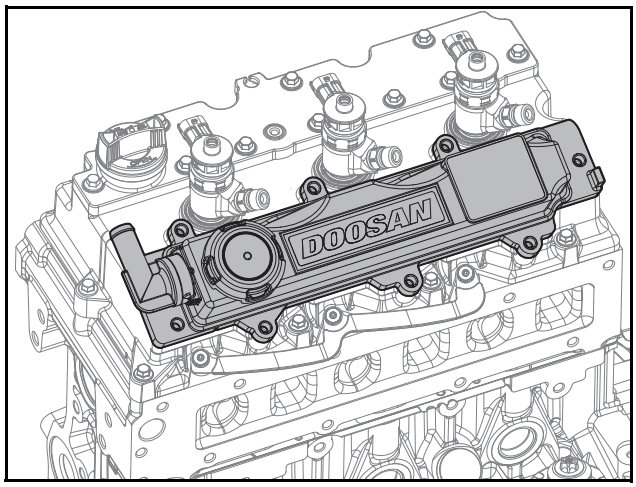

ED18190065

1) Align the right cylinder head cover with the assembly pin hole and attach it.
2) Temporarily tighten 8 flange hex bolts in the order.
3) Tighten 8 flange hex bolts at a tightening torque of 1 ±0.1 kgf·m.

6. Attach the intake manifold.

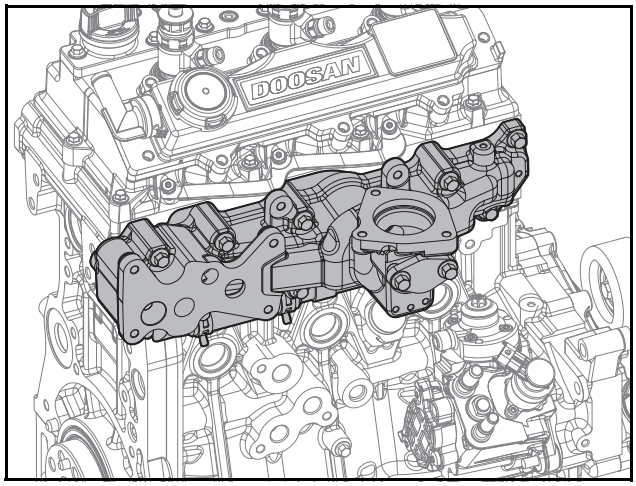

ED18190064

1) Mount the intake manifold and the gasket.

⚠ CAUTION

- **Be careful to note the direction when mounting the gasket.**
- **Be careful not to damage the gasket while mounting it.**

2) Tighten 11 flange hex bolts and 2 flange hex bolts at a tightening torque of 2.2 kgf·m.
3) Attach EGR mixer and gasket to the intake manifold.
4) Tighten 2 flange hex bolts at a tightening torque 2.2 kgf·m.

7. Attach the oil cooler and the oil filter module.

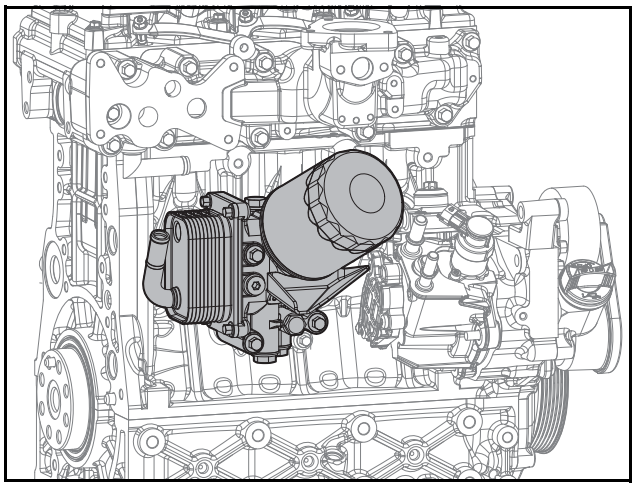

ED18190063

1) Mount the oil cooler and 3 O-rings to the oil filter module.
2) Tighten 3 flange hex bolts.
3) Mount the oil filter module and 3 O-rings to the cylinder block.

⚠ CAUTION

- **Make sure that the O-rings have been mounted.**
- **Be careful not to damage the O-rings while mounting them.**

4) Tighten 3 flange hex bolts at a tightening torque of 2.2 kgf·m.
5) Wipe the surface on which the oil filter is mounted clean.
6) Thinly spread engine oil over the rubber packing of the new oil filter.
7) Temporarily mount the oil filter by turning it by hand.
8) Mount the oil filter with the filter wrench at a tightening torque of 16 ~ 20 N·m.

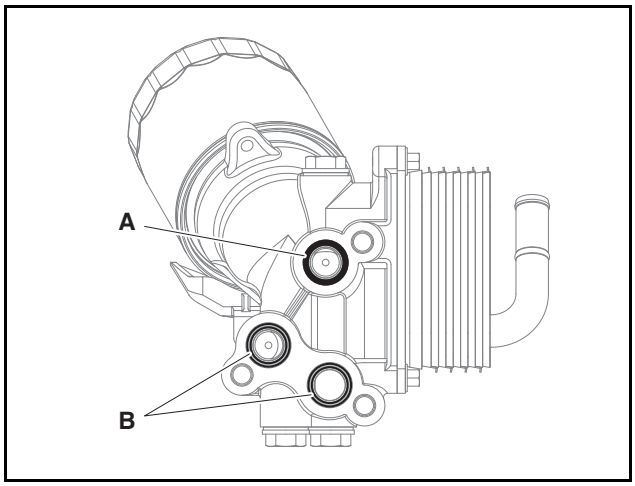

EDM02200226

⚠ CAUTION

Check the 1 O-ring at A (black) on the top of the oil filter and the 2 O-rings at B (yellow) on the bottom.

8. Attach the EGR valve.

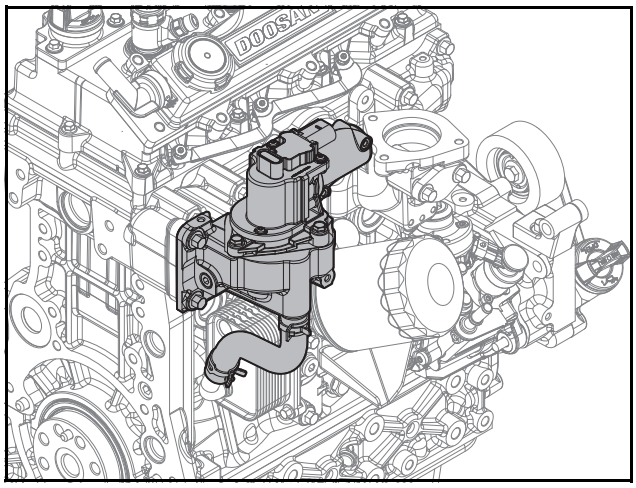

ED18190062

1) Attach the EGR valve and gasket to the intake manifold.

⚠ CAUTION

- **The EGR valve has to be handled with care, because it is sensitive to external impact.**

2) Tighten 4 flange hex bolts at a tightening torque 2.2 kgf·m.
3) Assemble hose and clamps.
9. Attach the common rail.

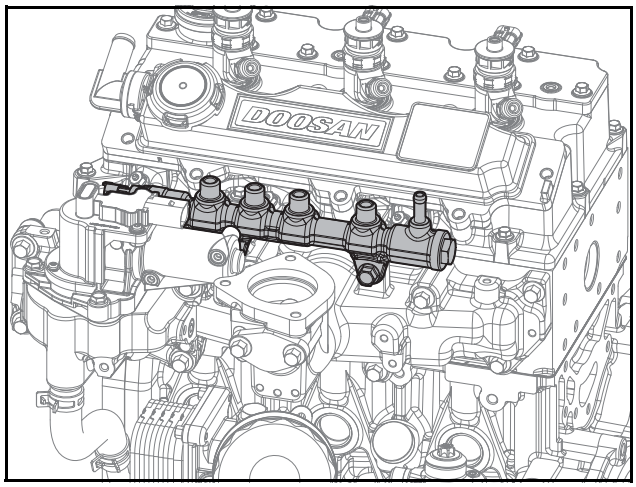

ED18190061

1) Attach the common rail to the intake manifold.

⚠ CAUTION

- **Be careful to note the direction when attaching the common rail.**
- **Be careful not to damage the common rail while attaching it.**

2) Temporarily tighten 2 hex bolts by hand.
3) Tighten 2 hex bolts at a tightening torque of 2.2 kgf·m.

10. Connect the fuel injection pipes.

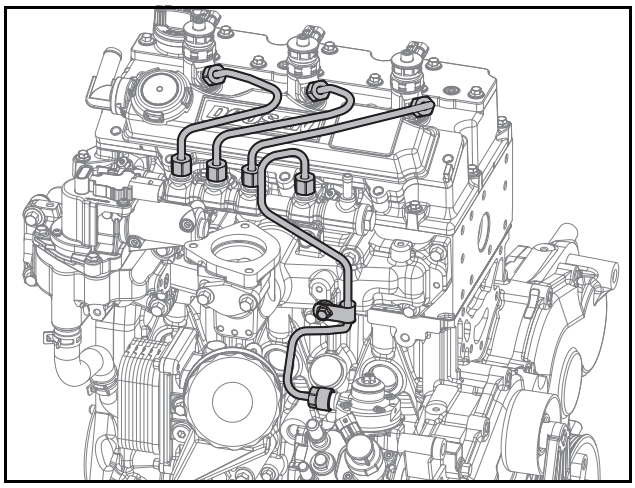

ED18190060

1) Loosen 2 hex bolts of the common rail.
2) Temporarily connect the fuel injection pipes by hand.

⚠ CAUTION

- **Do not bend the fuel injection pipes by force.**
- **Be careful to note the direction when connecting the fuel injection pipes.**
- **Assemble the nut on one side of the fuel injection pipe first, and then the nut on the other side to connect the round part of the pipe to the correspondent part correctly.**
- **Do not reuse fuel injection pipes and clamp; replace them with new ones. Reusing fuel injection pipes and clamp may allow foreign substances into the fuel pipes or oil leaks from the bolt clamping to occur, causing a critical fault in engine performance.**

3) Tighten 2 hex bolts of the common rail at a tightening torque of 2.2 kgf·m.
4) Tighten the nuts of the fuel injection pipe, which are connected to the common rail and the injector, at a tightening torque of 3.0 kgf·m.
5) Tighten the nuts of the fuel injection pipe, which are connected to the common rail and the fuel injection pump, at a tightening torque of 3.0 kgf·m.

11. Connect the fuel return hose.

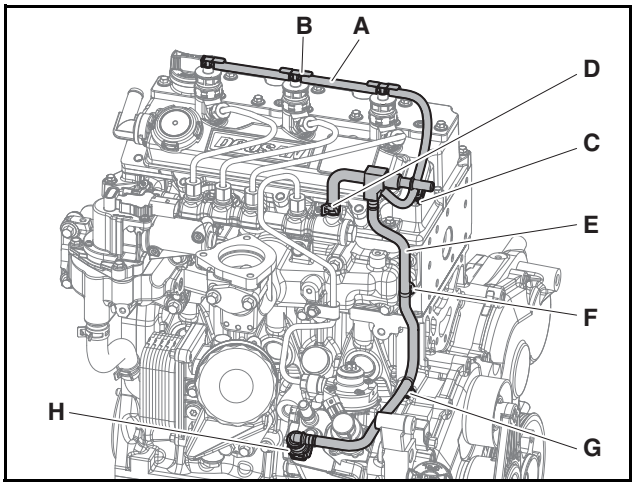

ED18190059

1) Press the fuel return hose into the end of the nipple and connect it.

⚠ CAUTION

- **Be careful to note the direction when connecting the fuel return hose.**
- **The injector should be fully connected with the hose.**
- **Be careful to avoid damage for fuel return hose of injector.**
- **Don't press on the fuel hose, don't drop heavy tool like as spanner on engine, don't step on fuel hose, don't stand on engine.**
- **If the fuel hose are broken by wrong handling, it is possible fire.**

2) Mount 4 hose clips.
3) Mount the hose clips.

⚠ CAUTION

Fix the handle of hose clip to face the front of the engine.

4) Tighten the flange hex bolts.
5) Mount the fixing clips.

12. Mount the rear and front lifting hooks.

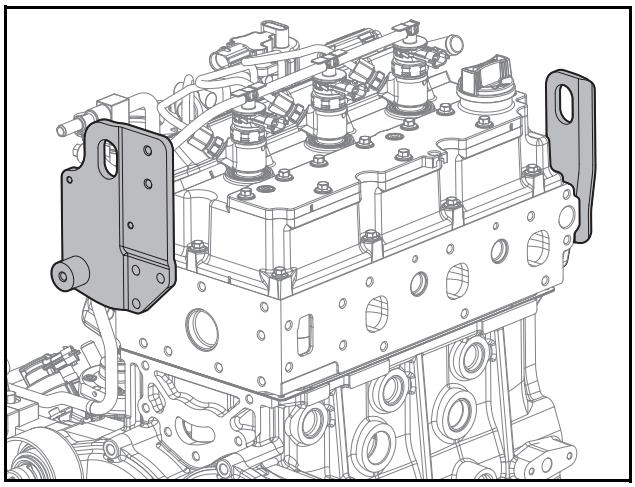

ED18190058

1) Mount the rear lifting hook.
2) Tighten 2 flange hex bolts at a tightening torque of 4.4 kgf·m.
3) Mount the front lifting hook.
4) Tighter 3 flange hex bolt at a tightening torque of 2.2 kgf·m.

13. Attach the water pump.

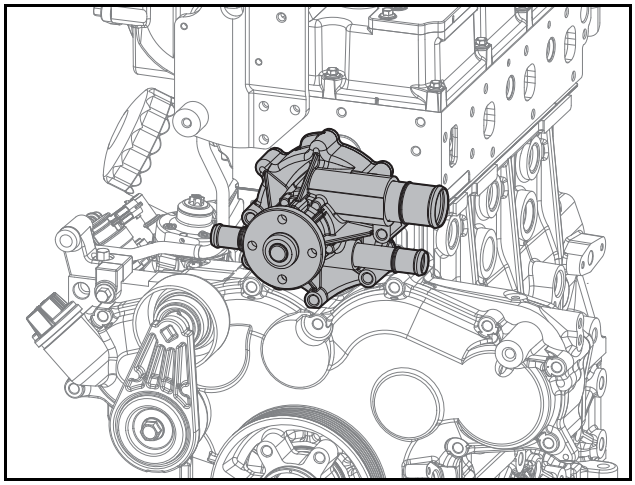

ED18190057

1) Align the gasket with the stud bolts and mount it.
2) Align the coolant pump with the stud bolts and attach it.
3) Tighten 4 hex bolts and 2 flange hex nuts at a tightening torque of 2.2 kgf·m.

⚠ CAUTION

- **Do not allow the gasket to protrude from or be to one side of the coolant pump.**
- **Be careful not to damage the gasket while mounting it.**

14. Attach the water pump pulley.

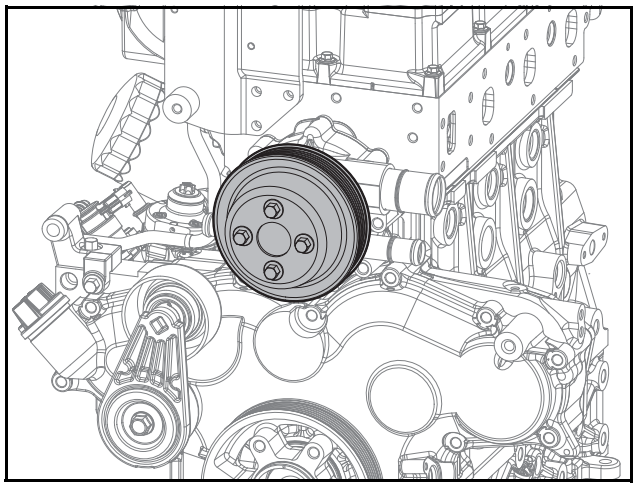

ED18190056

1) Attach the water pump pulley.
2) Tighten 4 hex bolts at a tightening torque of 2.2 kgf·m.

15. Attach the heat screen.

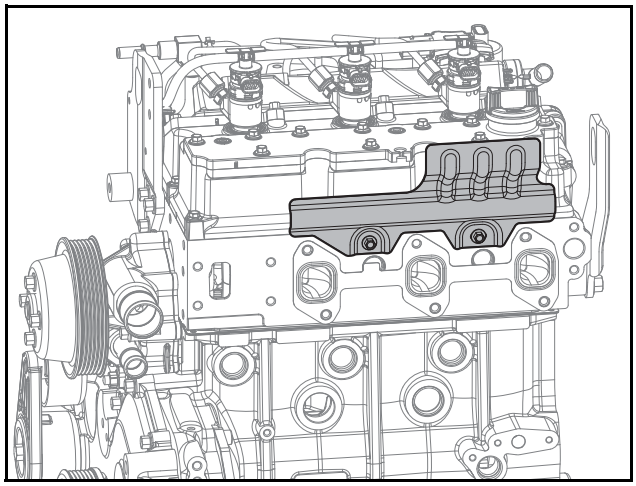

ED18190088

1) Mount the heat screen.
2) Tighten 2 flange hex bolts at a tightening torque 1.25 ±0.1 kgf·m.

⚠ CAUTION

- **Be careful to note the direction in which the gasket is mounted. Mount the gasket so that the TOP mark faces the front of the engine.**
- **Be careful not to damage the gasket while mounting it.**

16. Attach the exhaust manifold.

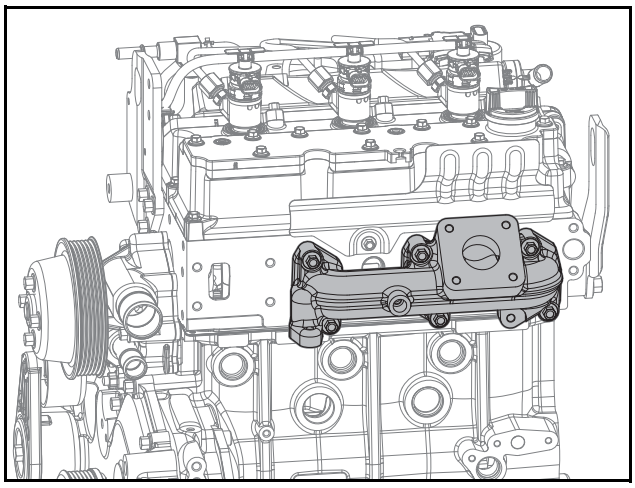

ED18190055

1) Mount the gasket so that the TOP mark faces the top surface and the front of the engine.
2) Attach the exhaust manifold.
3) Apply torque as follow below sequence.
   - Tightening torque: 3.4 ±0.3 kgf·m.
4) Apply check torque as follow below sequence again.
   - Tightening torque: 3.4 ±0.3 kgf·m.

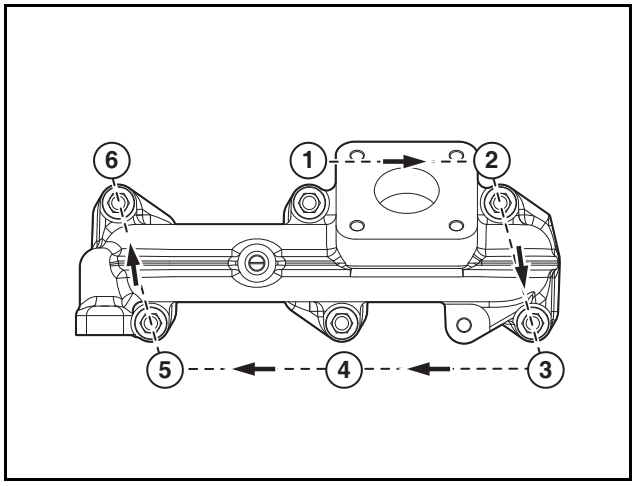

EDM01200172

17. Mount the thermostat.

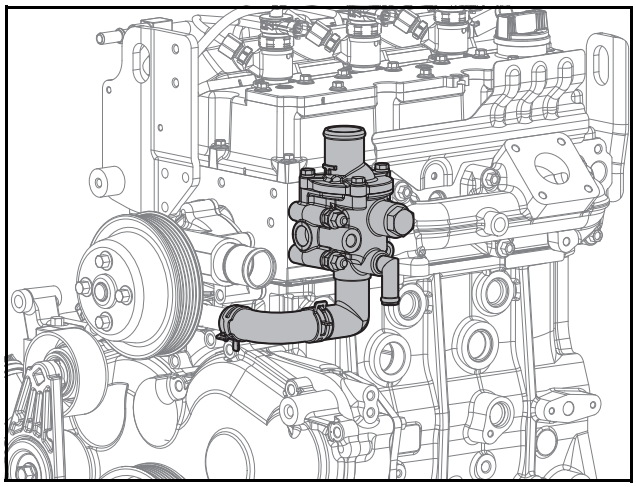

ED18190054

1) Mount the thermostat to the cylinder head.
2) Tighten 2 flange hex bolt, 2 space bolt and 2 flange hex nut as a tightening.
3) Tighten 3 flange hex bolts at a tightening torque of 2.2 kgf·m.
4) Connect the rubber hose.
5) Mount the hose clamps.

⚠ CAUTION

- **After mounting the hose clamps, make the protrusion face the cylinder head side to prevent interference between the protrusion and the coolant pump pulley.**
- **Do not use the hose clamps more than twice; replace them with new ones.**

18. Attach the EGR cooler.

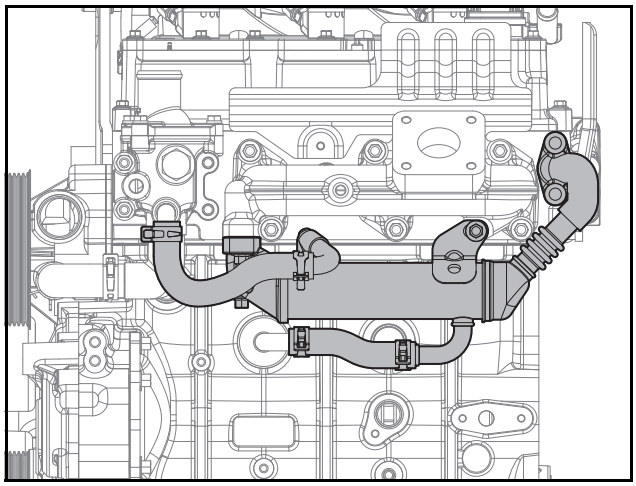

ED18190053

⚠ CAUTION

- **Be careful to note the direction when mounting the EGR cooler.**
- **Be careful not to damage the gasket while mounting it.**

1) Mount the EGR cooler and gaskets to the exhaust manifold and cylinder head.
2) Tighten 3 flange hex bolts at a tightening torque of 3.1 kgf·m. (exhaust manifold side)
3) Tighten 2 flange hex bolts at a tightening torque of 2.2 kgf·m. (cylinder head side)
4) Assemble 2 hoses and clamps.

⚠ CAUTION

Do not reuse the clamps if it has permanent deformation by irregular shape.

19. Assemble the turbocharger.

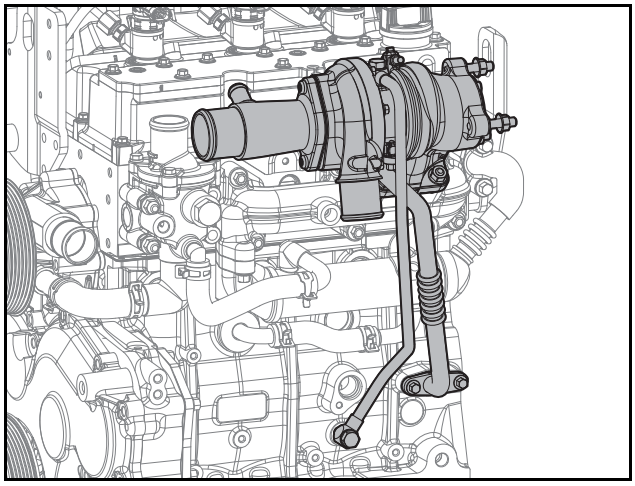

ED18190052

1) Connect the oil return pipe and gasket to the turbocharger.
2) Tighten 2 flange hex bolts at a tightening torque of 1.25 ±0.12 kgf·m.
3) Mount the turbocharger and the gasket to the exhaust manifold.

⚠ CAUTION

- **Be careful to note the direction when mounting the gasket.**
- **Be careful not to damage the gasket while mounting it.**
- **Do not reuse gaskets; replace them with new ones.**

4) Tighten 4 flange hex nuts at a tightening torque of 2.2 kgf·m.
5) Assemble the gasket between oil return pipe and cylinder block. Tighten 2 flange hex nuts at a tightening torque of 1.0 kgf·m.

⚠ CAUTION

Do not reuse the clamp if it has permanent deformation by irregular shape.

6) Temporary tighten 2 hollow screws to the oil delivery pipe manually.
7) Tighten 2 hollow screws at a tightening torque of 1.9 kgf·m.

⚠ CAUTION

- **Do not reuse the oil supply pipe.**
- **Tighten the hollow screw at the cylinder block side first, and then tighten the other at the turbocharger side.**

Note) During assembly, add 3 cc of clean oil to the turbocharger oil inlet.

20. Mount the oil level gauge and the coolant hose.

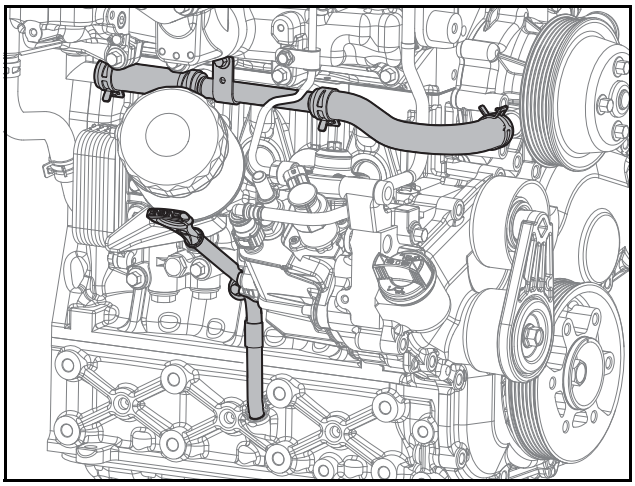

ED1819089

1) Replace the O-ring of the oil level gauge guide tube with a new part.
2) Insert the oil level gauge guide tube in the cylinder block and connect it.
3) Tighten flange hex bolts at a tightening torque of 1.0 kgf·m.

4) Mount the oil level gauge.

⚠ CAUTION

Make the handle of the oil level gauge face the reverse direction from the center of the engine.

5) Connect the coolant hose.
6) Mount the hose clamps.

⚠ CAUTION

Do not use hose clamps more than twice; replace them with new ones.

7) Tighten flange hex bolts at a tightening torque at a tightening torque of 2.2 kgf·m.

21. Connect the throttle (inlet pipe) and the intake stake.

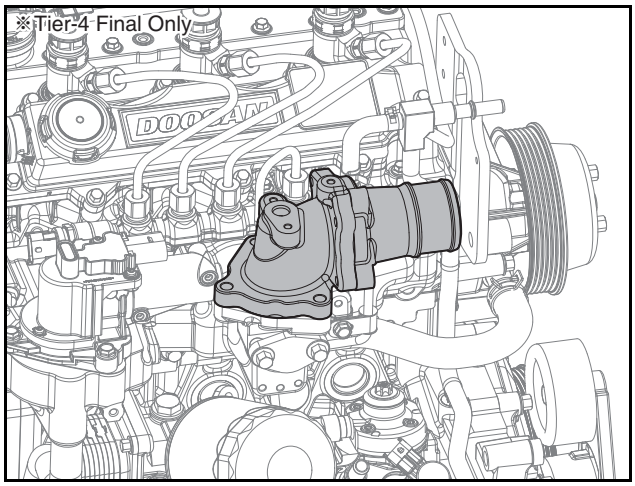

ED18190180

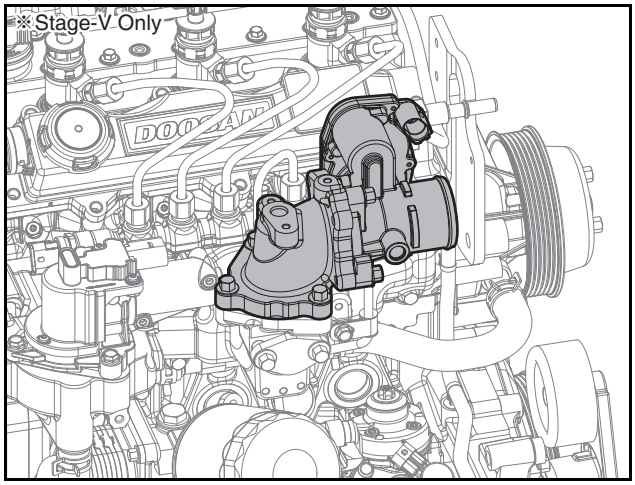

ED18190051

1) Mount the intake stake and the gasket to the intake manifold.
2) Tighten 3 hex bolts at a tightening torque of 2.2 kgf·m.
3) Connect the throttle (inlet pipe) and the gaskets to the intake stake.
4) Tighten 3 hex bolts at a tightening torque of 2.2 kgf·m.

⚠ CAUTION

- **Be careful to note the direction when mounting the gasket.**
- **Be careful not to damage the gasket while mounting it.**

22. Connect the breather hose.

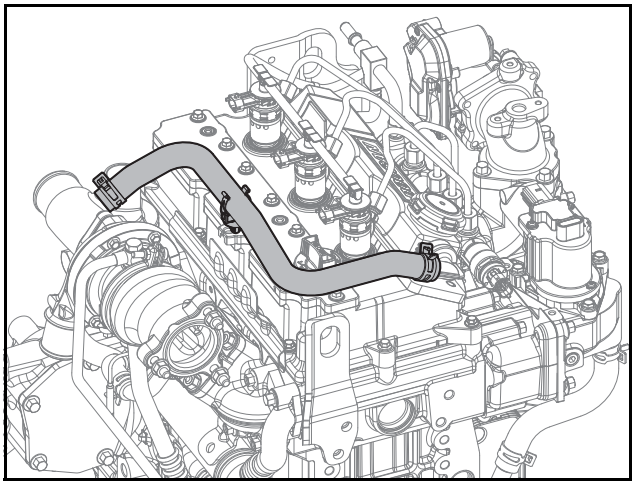

ED18190050

1) Connect the breather hose.
2) Mount the hose clamps.

⚠ CAUTION

Do not reuse the clamp if it has permanent deformation by irregular shape.

Check of Rocker Arm Shaft

1. Remove the rocker arm shaft.

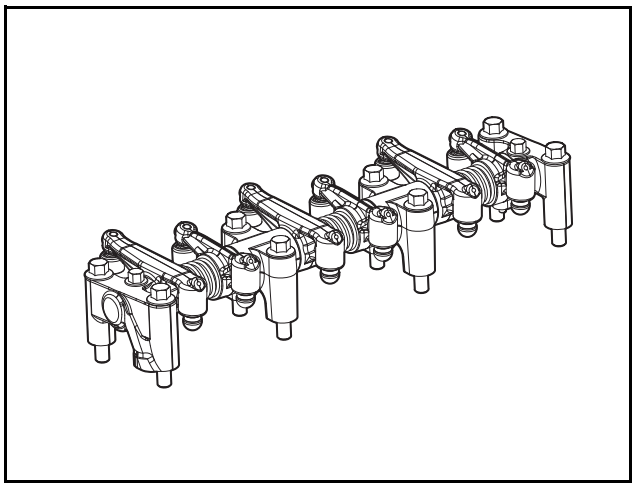

ED18190031

1) Loosen and remove the fixing bolts from the rocker arm bracket.
2) Remove the rocker arm bracket, the rocker arm shaft spring, the rocker arm, and the rocker arm shaft in the order as listed before.
2. Check warpage of the rocker arm shaft.

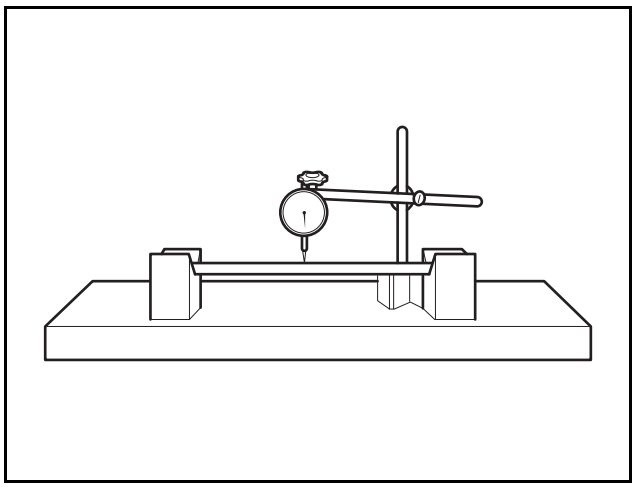

EDL022101A

1) Put the rocker arm shaft on two V-blocks.
2) Install the dial gauge.
3) Check the degree of warpage of the rocker arm shaft as rotating the rocker arm shaft.

Note) If the warpage is slight, correct it by pressing with the press. If the warpage is out of the allowable limit, replace it with a new one.

3. Check the outside diameter of the rocker arm shaft.

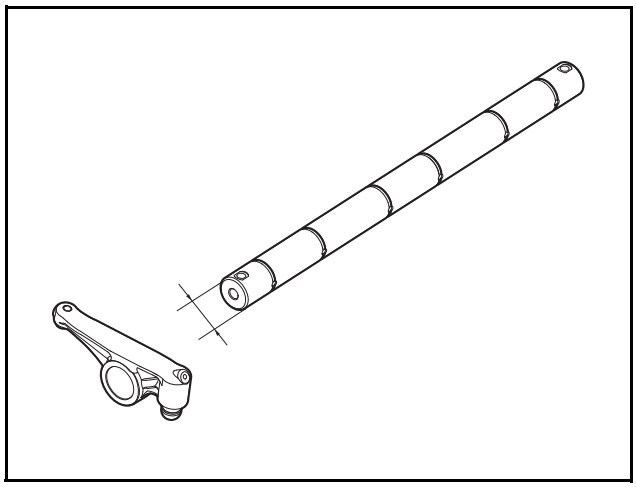

ED18190032

1) Measure the outside diameter of the rocker arm shaft on the position where the rocker arm is attached with the outside diameter micrometer.

Note) If the outside diameter is out of the allowable limit, replace it with a new one.

Check of Rocker Arm

1. Remove the rocker arm.

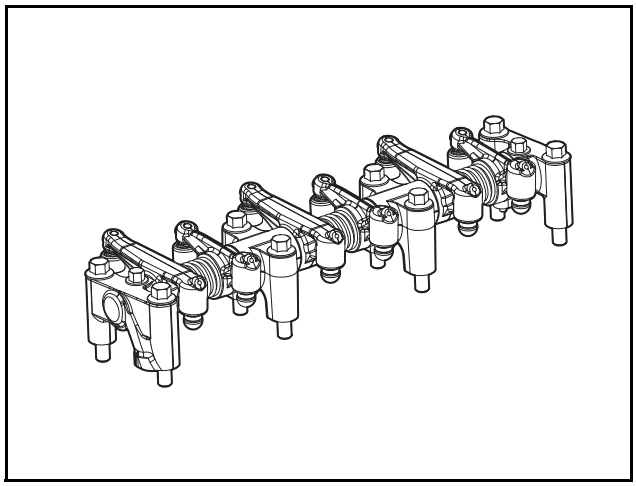

ED18190031

1) Loosen and remove the fixing bolts from the rocker arm bracket.
2) Remove the rocker arm bracket, the rocker arm shaft spring, and the rocker arm in the order as listed before.
2. Check the exterior of the rocker arm with the naked eye.
1) Check whether the adjust screw cap assembly surface, which moves as contacting to the valve stem, is scratched, or the layer is worn with the naked eye.

Note) If the wear is slight, polish it with the oil-contained whetstone or fine sandpaper. If the layer is seriously worn, replace the rocker arm with a new one.

Note) For polishing the rocker arm, use the sandpaper dipped in oil

3. Measure the inside diameter of the rocker arm.

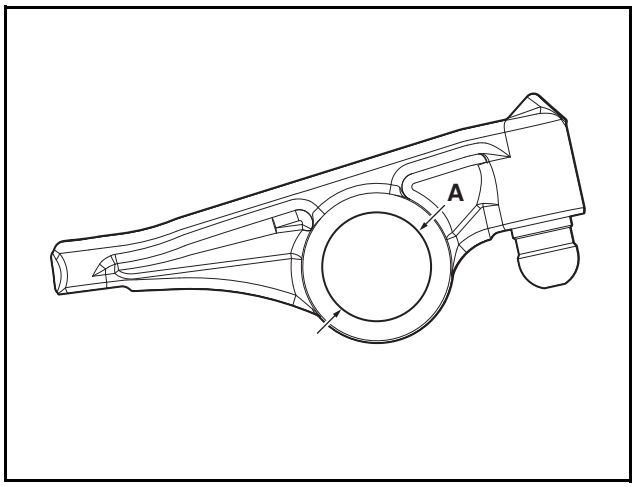

ED24190168

1) Measure the rocker arm inside diameter with the micrometer or the vernier calipers.
2) Apply HLA & rocker arm bore A. (ø20)

Note) Compare the measurement value with the outside diameter of the rocker arm shaft. If the gap is larger than the specified value, replace the one of which wear is more serious.

Tappet and push rod

Disassembly of Valve Tappet

1. Detach the valve tappet.

Note) Refer to Chapter 5 (Procedure of Disassembling an Engine)

Assembly of Valve Tappet

1. Attach the valve tappet.

Note) Refer to Chapter 5 (Procedure of Assembling an Engine)

Check of Valve Tappet

1. Check the exterior of the valve tappet with naked eye.

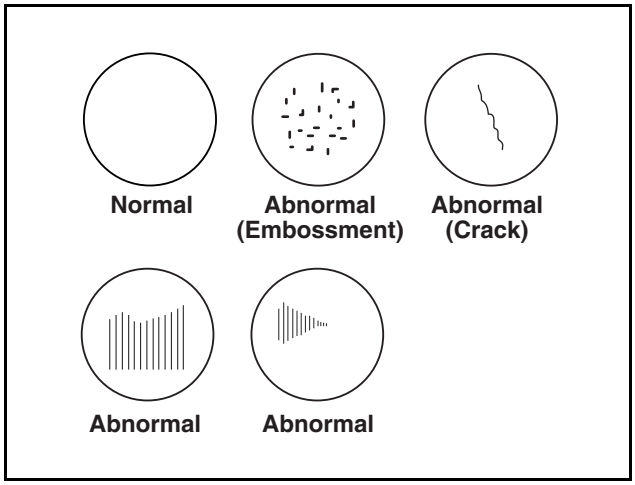

ED24190169

1) Check whether the valve tappet surface, which moves as contacting to the camshaft, is cracked or scratched.

Note) If the wear is slight, polish it with the oil-contained whetstone or fine sandpaper. If the crack or scratch is serious, replace the valve tappet with a new one.

Note) For polishing the camshaft, use the sandpaper dipped in oil.

2. Measure the gap of the valve tappet.

1) Measure the outside diameter of the valve tappet and the tappet hole diameter of the cylinder block.

Note) If the diameter is out of the allowable limit, replace the valve tappet with a new one.

3. Measure the outside diameter of the valve tappet.

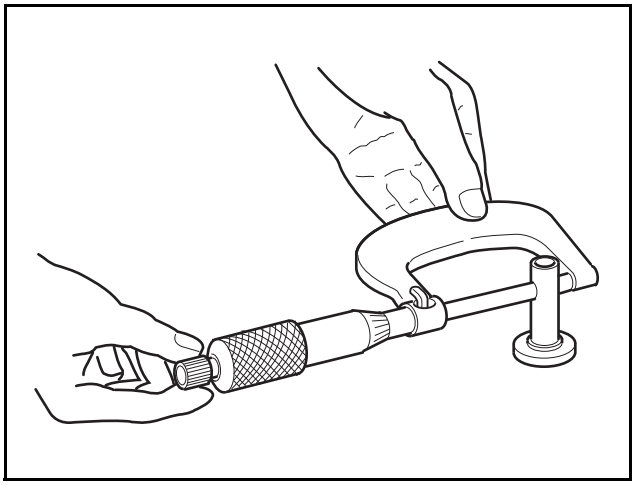

EDL022105A

1) Measure the outside diameter of the valve tappet with the outside diameter micrometer.

Note) If the diameter is out of the allowable limit, replace the valve tappet with a new one.

Disassembly of Push Rod

1. Disconnect the breather hose.

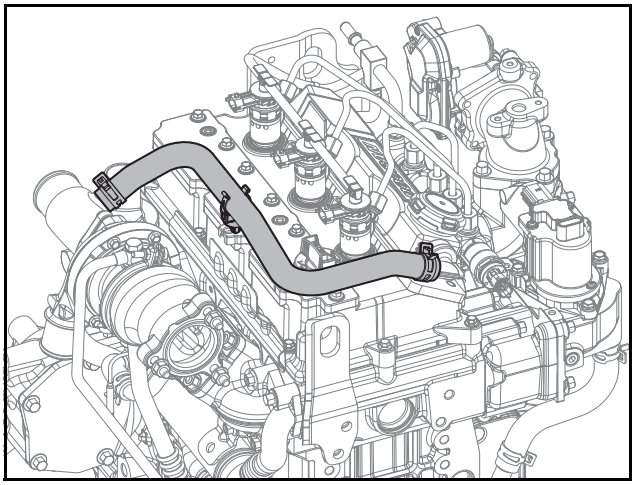

ED18190050

1) Remove the hose clamps.
2) Disconnect the breather hose.

2. Disconnect the throttle (inlet pipe) and the intake stake.

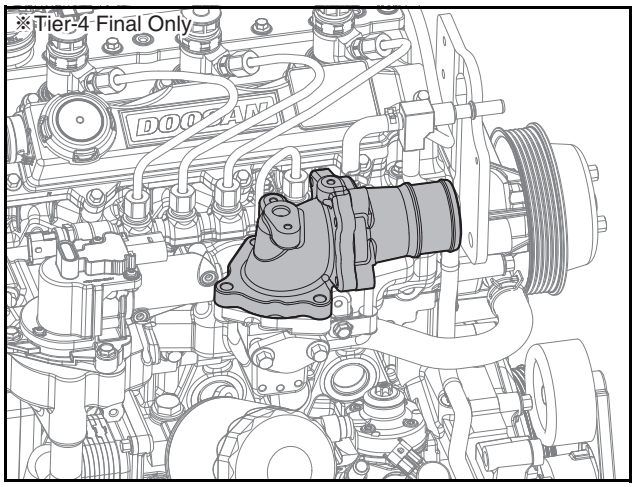

ED18190180

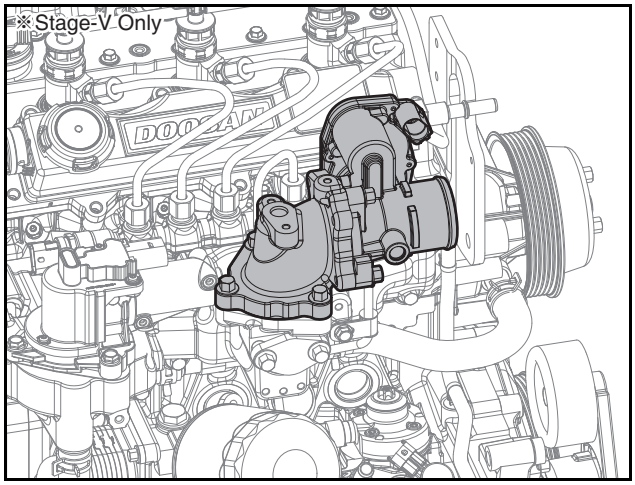

ED18190051

1) Loosen 3 hex bolts.
2) Remove the throttle (inlet pipe) and the gaskets from the intake stake.
3) Loosen 3 hex bolts.
4) Remove the intake stake from the intake manifold.
3. Disconnect oil level gauge and coolant hose.

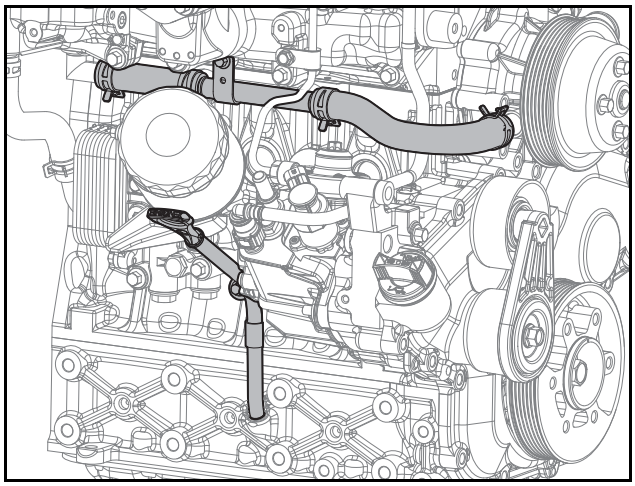

ED1819089

1) Loosen the flange hex bolt.
2) Remove the hose clamp.
3) Disconnect the coolant hose.
4) Remove the oil level gauge.
5) Loosen the flange hex bolt.
6) Disconnect the oil level gauge guide tube.
4. Remove the turbocharger.

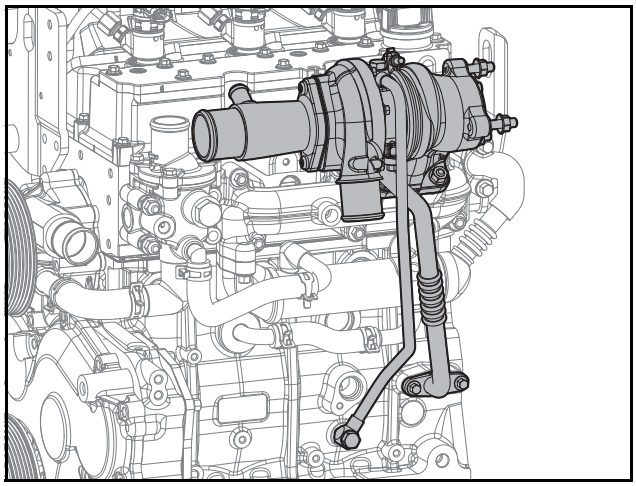

ED18190052

1) Loosen 2 hex bolts and remove the heat screen. (if needed)
2) Loosen 2 hollow screws and disconnect the oil delivery pipe.
3) Loosen 4 flange hex bolts.
4) Disconnect the oil return pipe.
5) Loosen 4 flange hex nuts.
6) Remove the turbocharger and the gasket.
5. Remove the EGR cooler.

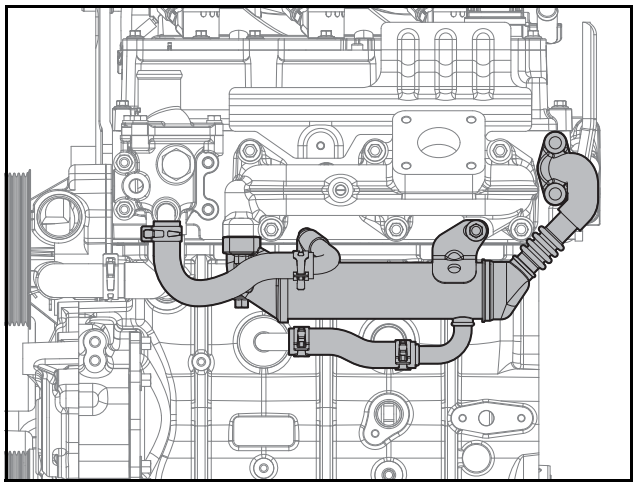

ED18190053

1) Remove the hose clamp.
2) Disconnect 2 hose.
3) Loosen 5 flange hex bolt.

4) Remove EGR cooler and 2 gasket.

⚠ CAUTION

Exhaust gas make engine parts extremely hot. Only remove the parts when they have fully cooled to prevent burns.

6. Remove the thermostat.

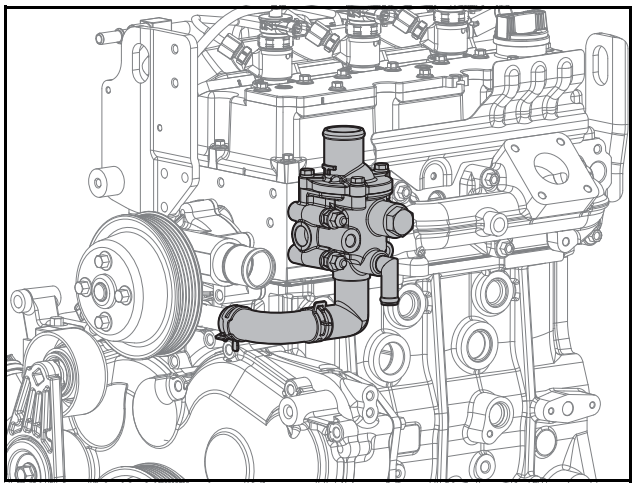

ED18190054

1) Remove the hose clamps.
2) Disconnect the rubber hose.
3) Loosen 2 flange hex bolt, 2 space bolt and 2 flange hex nut.
4) Remove thermostat.

7. Remove the exhaust manifold.

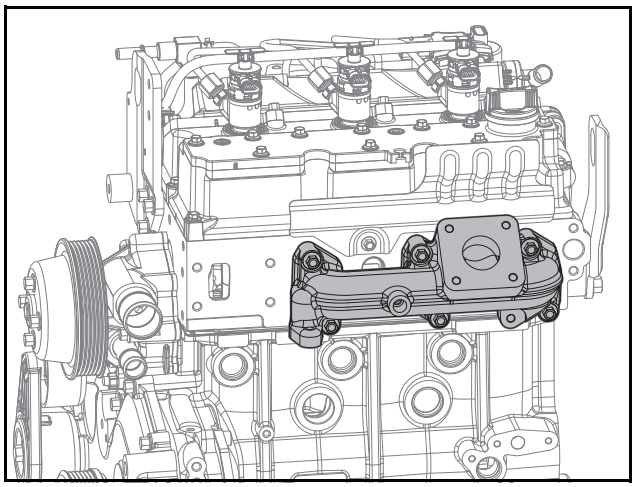

ED18190055

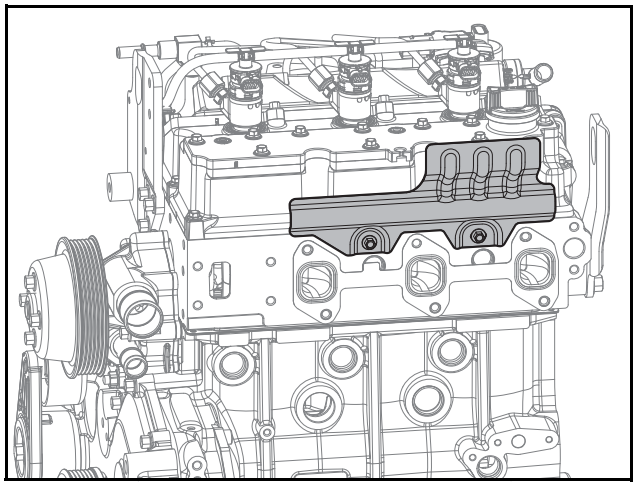

ED18190088

1) Loosen 6 flange hex bolts.
2) Remove the exhaust manifold and the gasket.
3) Loosen 2 flange hex bolts.
4) Remove the heat shield.

⚠ CAUTION

Exhaust gas make engine parts extremely hot. Only remove the parts when they have fully cooled to prevent burns.

8. Remove the coolant pump pulley.

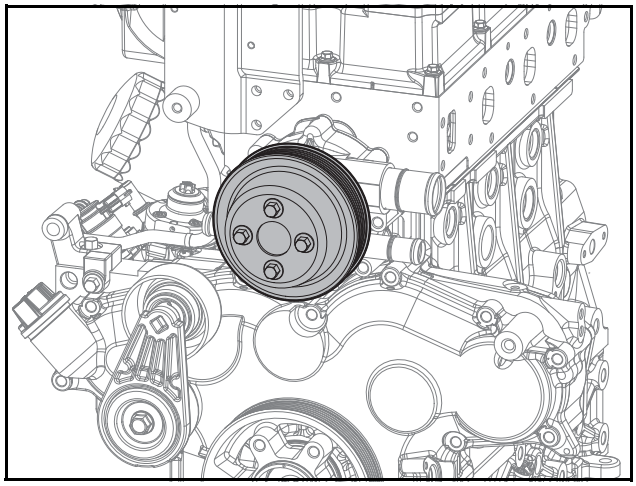

ED18190056

1) Loosen 4 hex bolts.
2) Remove the coolant pump pulley.

9. Remove the coolant pump.

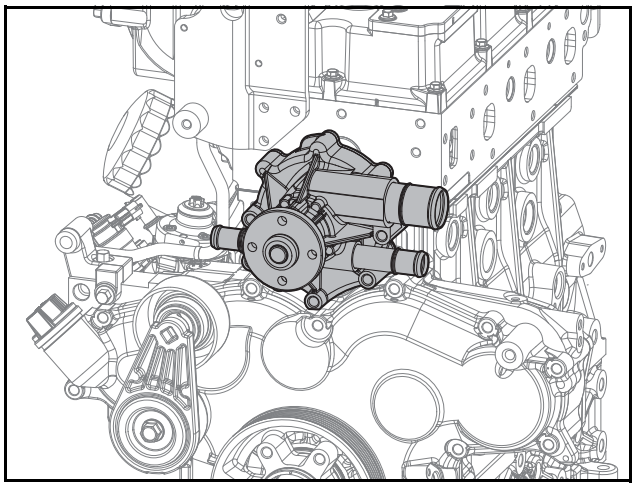

ED18190057

1) Loosen 4 hex bolt and 2 flange hex nut.
2) Remove the coolant pump and the gasket.

10. Remove the lifting hooks.

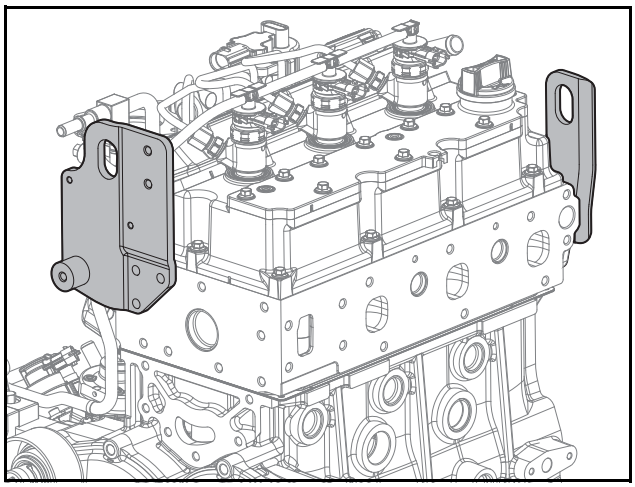

ED18190058

1) Loosen flange bolt.
2) Remove the lifting hooks.

11. Disconnect the fuel return hose.

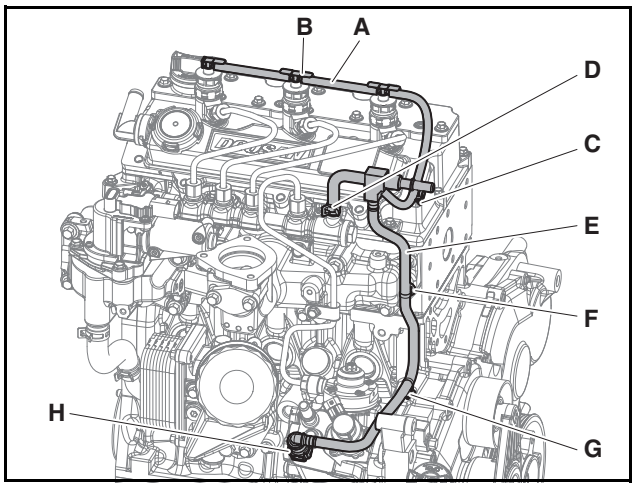

ED18190059

1) Open the adopter (B) of injector return hose (A).
2) Loosen the injector return hose (A).
3) Remove the edge clip (C).
4) Loosen the hose clamp (D).
5) Remove the cable tie (F), (C).
6) Disconnect the quick connector (H).
7) Disassemble the fuel return hose (A) and (E).

12. Disconnect the fuel injection pipes.

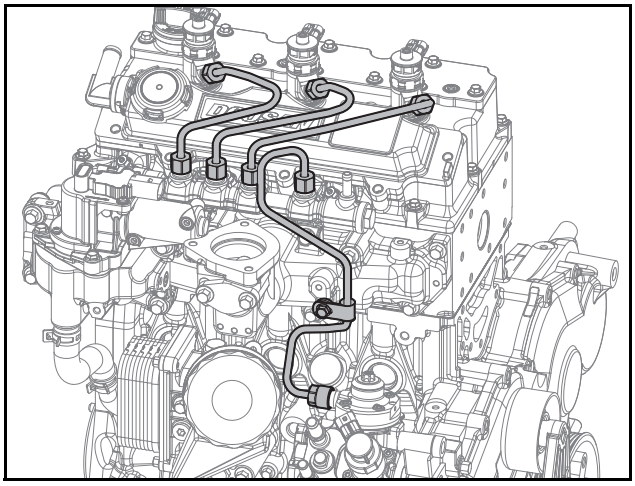

ED18190060

1) Loosen the nuts connected to the injector and the common rail.
2) Disconnect the fuel injection pipes.
3) Loosen the nuts connected to the common rail and the fuel injection pump.
4) Disconnect the fuel injection pipes.

⚠ CAUTION

Do not reuse fuel injection pipes and clamp; replace them with new ones.
If fuel injection pipes and clamp are reused it may allow foreign substances into the fuel pipes or cause oil leaks from bolt clamping and cause a critical fault in engine performance.

13. Detach the common rail.

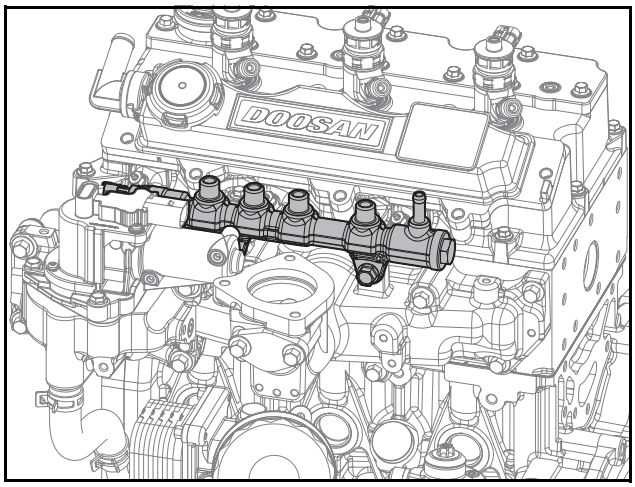

ED18190061

1) Loosen 2 hex bolts.
2) Remove the common rail from the intake manifold.

14. Disconnect the EGR valve.

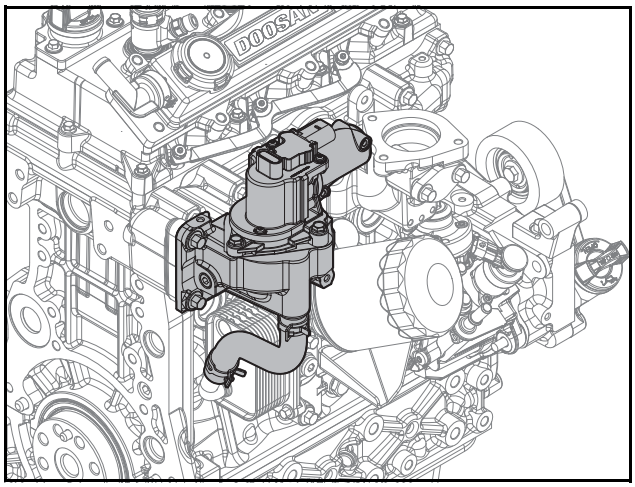

ED18190062

1) Remove the hose clamps.
2) Disconnect the hose.
3) Loosen 4 flange hex bolt.
4) Remove EGR valve and gasket.

15. Detach the oil cooler and the oil filter module.

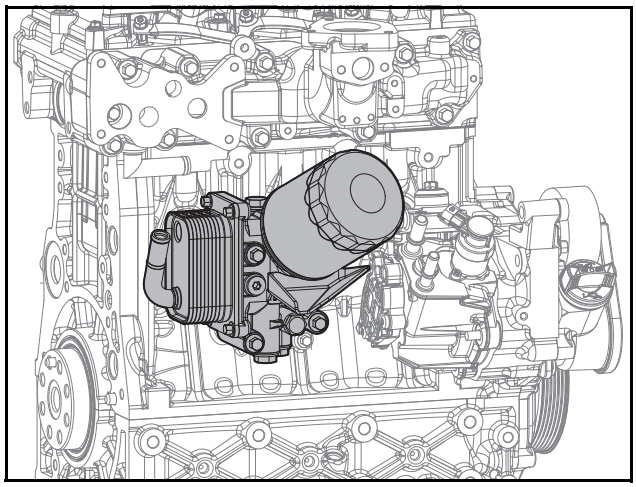

ED18190063

1) Detach the oil filter with the filter wrench.

⚠ CAUTION

Oil in the filter may run down while detaching the oil filter. Be careful not to contaminate the other parts by using a cloth when detaching the filter. After replacing the oil filter, wipe clean any other parts which the oil has touched.

2) Remove the oil filter module and the O-rings.
3) Loosen 3 flange hex bolts.
4) Remove the oil cooler and the O-rings from the oil filter module.

16. Remove the intake manifold.

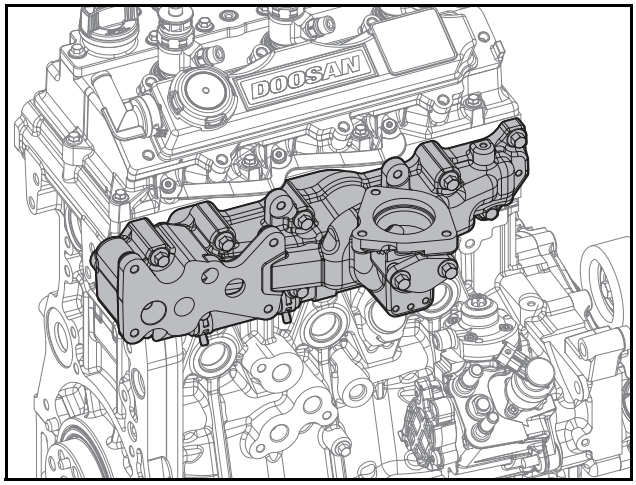

ED18190064

1) Loosen 13 flange hex bolt.
2) Remove the intake manifold and the gasket.
3) Loosen 2 flange hex bolts.
4) Remove EGR mixer and gasket.

17. Remove the right cylinder head cover.

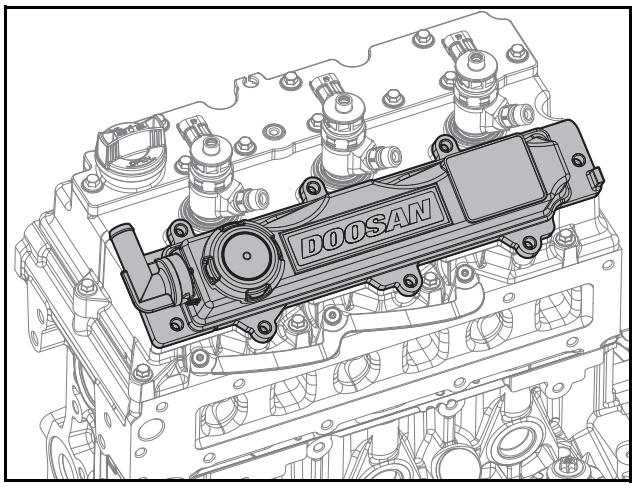

ED18190065

1) Loosen 8 flange hex bolts.
2) Remove the right cylinder head cover.

18. Remove the injector.

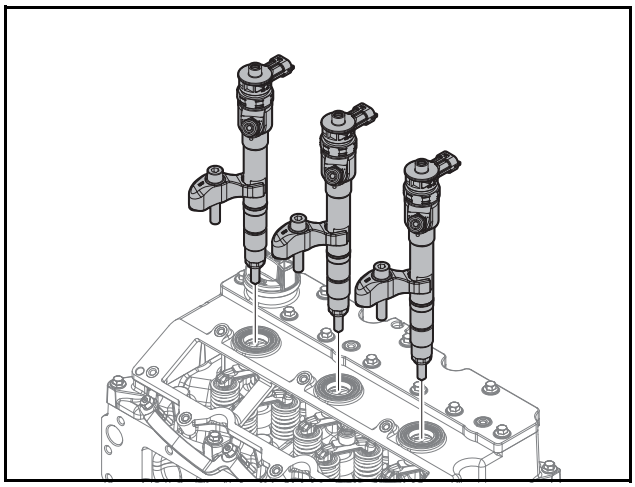

ED18190066

1) Loosen 3 hex bolts.
2) Remove 3 injector fixtures.
3) Remove 3 injectors.

Note) Remove the cylinder head cover and remove the injector seal ring washers.

⚠ CAUTION

- **Be careful not to damage the injector oil seal of the cylinder head cover.**
- **Remove it by turning the injector slowly from left to right.**
- **Do not reuse the injector seal ring washers. Reuse of the injector seal ring washers may cause critical damage to the engine due to unstable combustion.**

19. Disconnect the glow plugs.

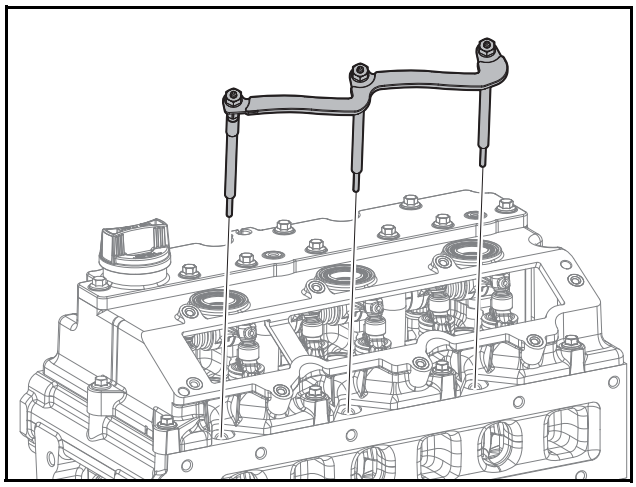

ED18190067

1) Loosen 3 hex nuts.
2) Remove the electric connector.
3) Disconnect 3 glow plugs.

20. Remove the cylinder head cover.

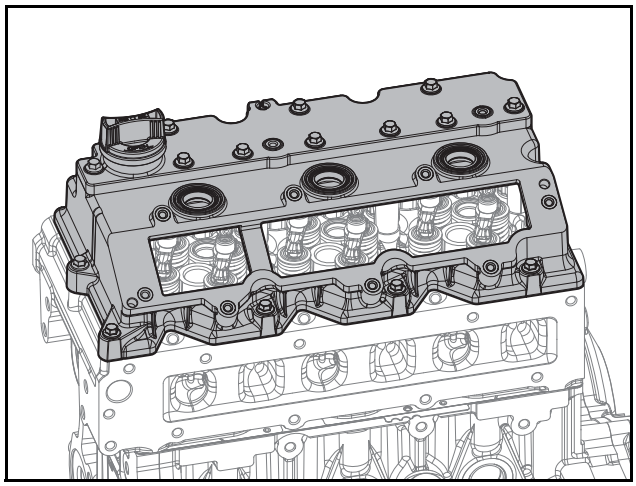

ED18190068

1) Loosen 10 hex bolts.
2) Remove the cylinder head cover.

21. Remove the rocker arm.

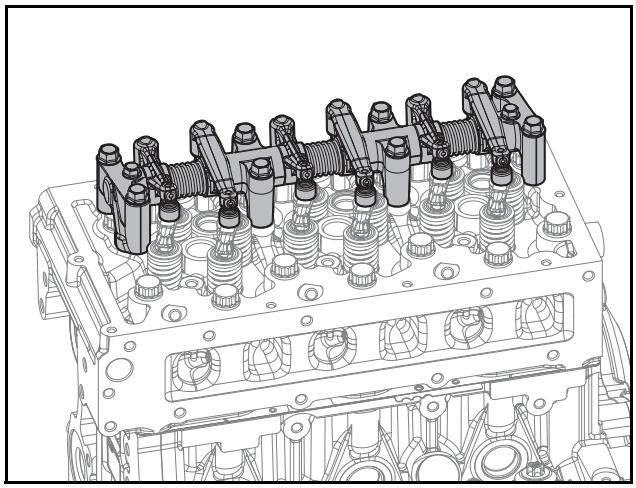

ED18190069

1) Loosen 8 flange hex bolts.
2) Remove the rocker arm.

22. Remove the push rods.

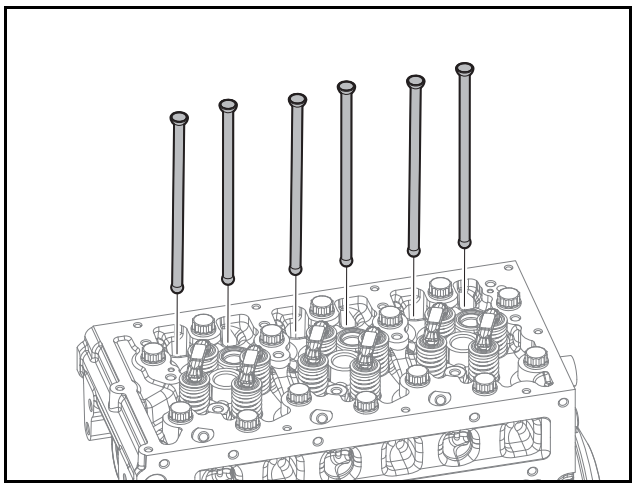

ED1819070

1) Remove the push rods.

Assembly of Push Rod

1. Connect the push rods.

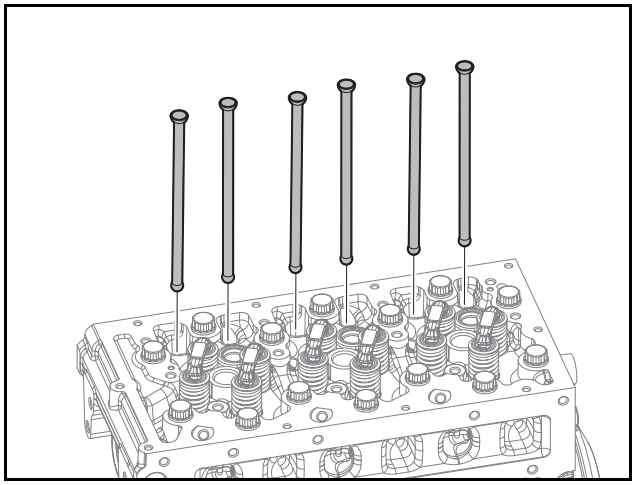

ED1819070

1) Apply engine oil on both ends of the push rods.
2) Connect the push rods in the cylinder head holes.
3) Hit the head of the push rods with a rubber hammer lightly once or twice to get them positioned in the tappet holes.

⚠ CAUTION

After connecting the push rods, rotate them to check the connection state.

2. Attach the rocker arm.

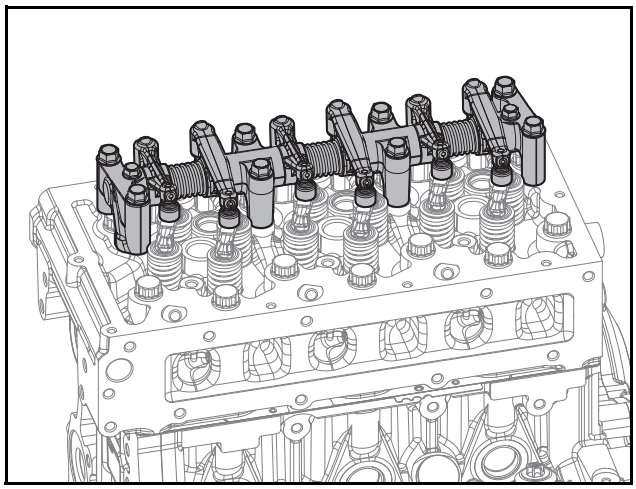

ED18190069

1) Attach the rocker arm.
2) Tighten 8 flange hex bolts at a tightening torque of 2.2 ±0.22 kgf·m.

3. Attach the cylinder head cover.

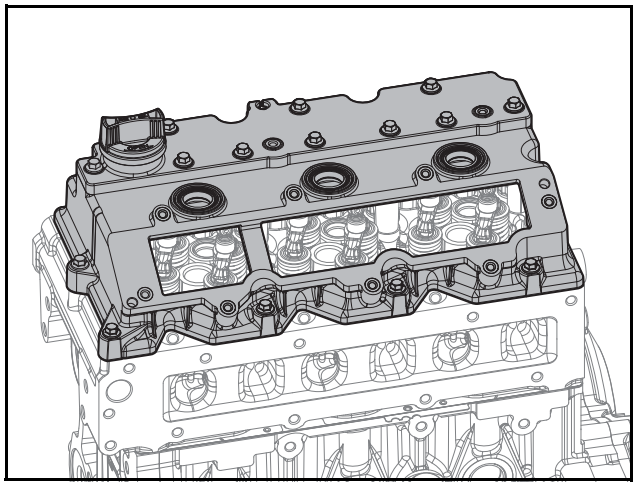

ED18190068

1) Attach the cylinder head cover.
2) Temporarily tighten 10 hex bolts.
3) Tighten 10 hex bolts at a tightening torque of 1 ±0.1 kgf·m.

⚠ CAUTION

- **Be careful not to allow the seal ring of the cylinder head cover to get out to the outside.**
- **Tighten the hex bolts of the cylinder head cover in the order. The front engine direction is the water pump direction and the rear engine direction is the Drive Plate direction.**

4) Mount the oil injection cap.

4. Connect the glow plugs.

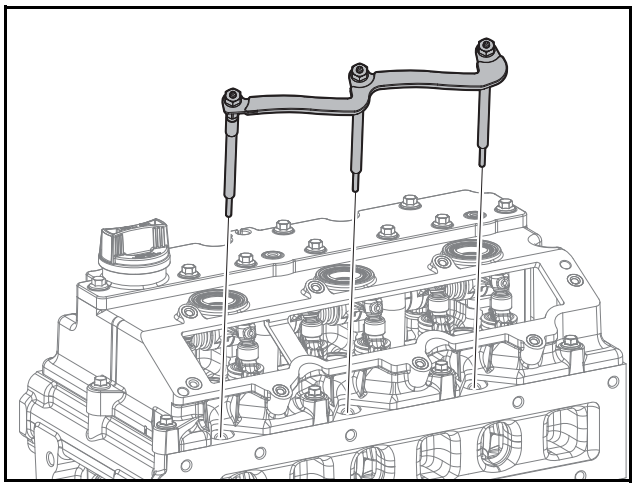

ED18190067

1) Tightening 3 glow plugs to the cylinder head at a tightening torque of 9 ~ 12 N·m.
2) Attach the electric connector.
3) Mount 3 washers.
4) Tighten 3 hex nuts at a tightening torque of 1.3 ~ 2 N·m.
5. Attach the injectors.

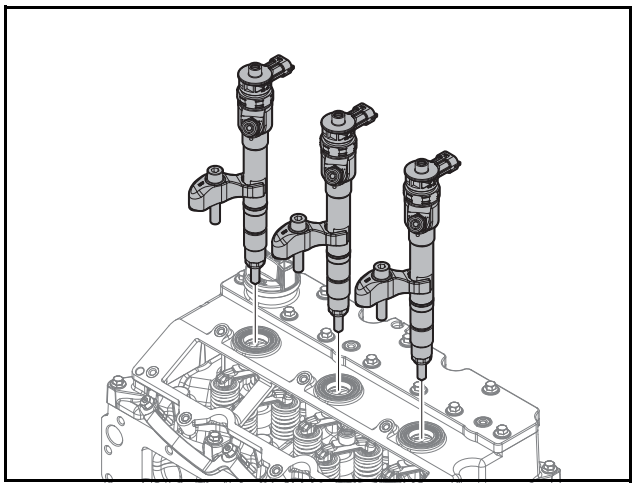

ED18190066

1) Align the injector seal ring washer with the center of the injector hole and mount it.
2) Sufficiently apply engine oil on the cylinder head cover surface where the injectors contact.
3) Attach 3 injectors.

⚠ CAUTION

- **Do not reuse the head cover rubber seal and the injector oil seal but replace with new ones.**
- **Attach injectors by slowly turning them to prevent damage to the cylinder head cover surface which contacts the injectors.**
- **Do not reuse the injector seal ring washers. Otherwise, critical damage to the engine may occur because of unstable combustion.**

4) Mount 3 injector fixtures.
5) Temporarily tighten 3 hex bolts.

⚠ CAUTION

Do not tighten the hex bolts by force when it is difficult to tighten them temporarily. Forced tightening may cause damage to the cylinder head.

6) Tighten 3 hex bolts at a tightening torque of 4.35 ±0.35 kgf·m.
6. Attach the right cylinder head cover.

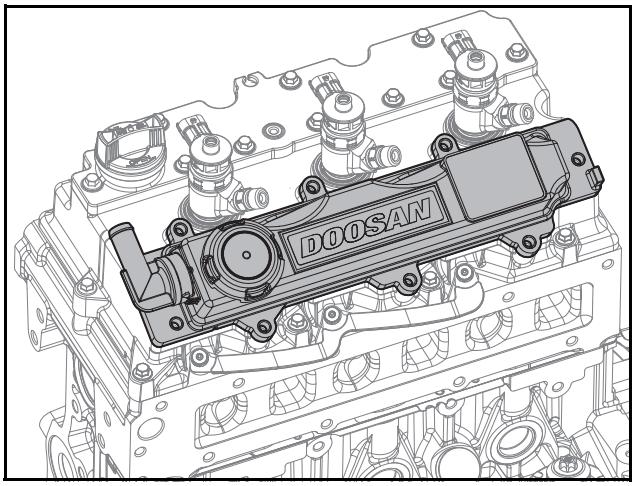

ED18190065

1) Align the right cylinder head cover with the assembly pin hole and attach it.
2) Temporarily tighten 8 flange hex bolts in the order.
3) Tighten 8 flange hex bolts at a tightening torque of 1 ±0.1 kgf·m.

7. Attach the intake manifold.

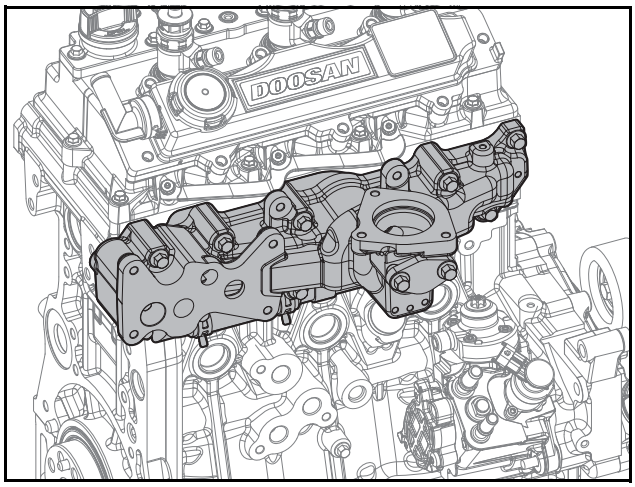

ED18190064

1) Mount the intake manifold and the gasket.

⚠ CAUTION

- **Be careful to note the direction when mounting the gasket.**
- **Be careful not to damage the gasket while mounting it.**

2) Tighten 11 flange hex bolts and 2 flange hex bolts at a tightening torque of 2.2 kgf·m.
3) Attach EGR mixer and gasket to the intake manifold.
4) Tighten 2 flange hex bolts at a tightening torque 2.2 kgf·m.

8. Attach the oil cooler and the oil filter module.

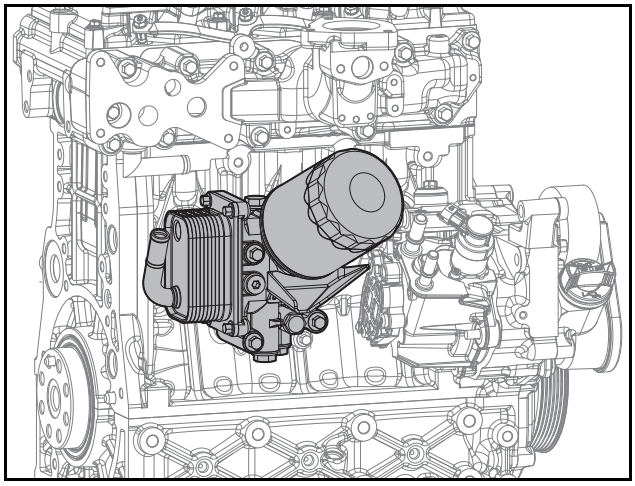

ED18190063

1) Mount the oil cooler and 3 O-rings to the oil filter module.
2) Tighten 3 flange hex bolts.
3) Mount the oil filter module and 3 O-rings to the cylinder block.

⚠ CAUTION

- **Make sure that the O-rings have been mounted.**
- **Be careful not to damage the O-rings while mounting them.**

4) Tighten 3 flange hex bolts at a tightening torque of 2.2 kgf·m.
5) Wipe the surface on which the oil filter is mounted clean.
6) Thinly spread engine oil over the rubber packing of the new oil filter.
7) Temporarily mount the oil filter by turning it by hand.
8) Mount the oil filter with the filter wrench at a tightening torque of 16 ~ 20 N·m.

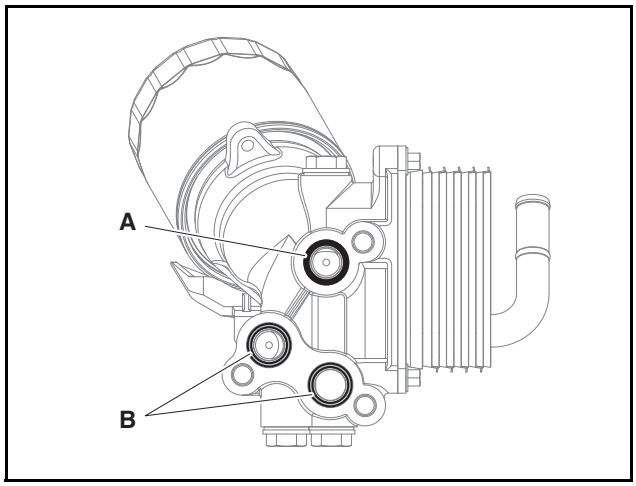

EDM02200226

⚠ CAUTION

Check the 1 O-ring at A (black) on the top of the oil filter and the 2 O-rings at B (yellow) on the bottom.

9. Attach the EGR valve.

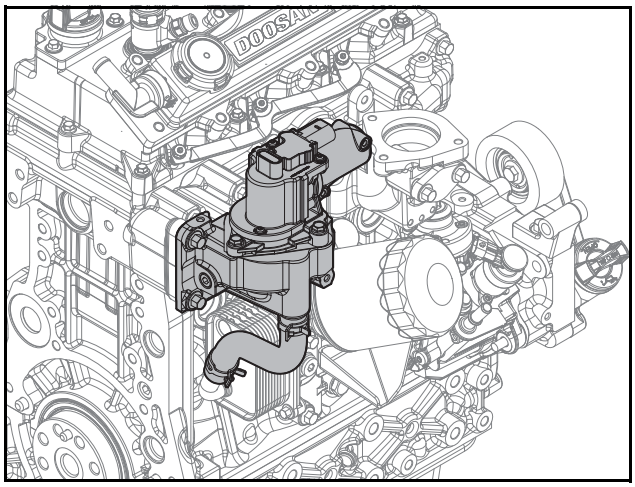

ED18190062

1) Attach the EGR valve and gasket to the intake manifold.

⚠ CAUTION

- **The EGR valve has to be handled with care, because it is sensitive to external impact.**

2) Tighten 4 flange hex bolts at a tightening torque 2.2 kgf·m.
3) Assemble hose and clamps.

10. Attach the common rail.

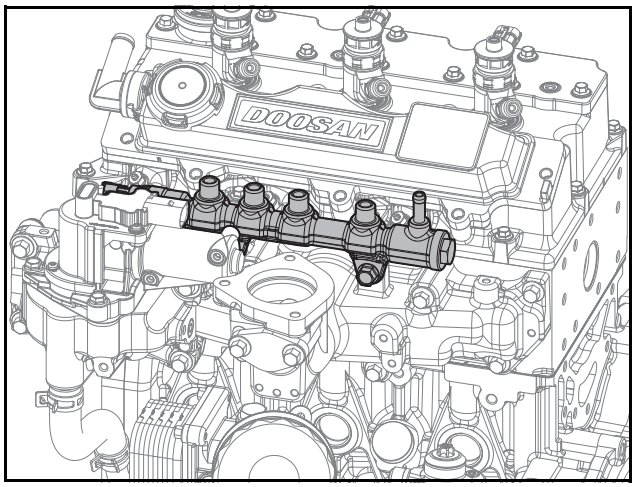

ED18190061

1) Attach the common rail to the intake manifold.

⚠ CAUTION

- **Be careful to note the direction when attaching the common rail.**
- **Be careful not to damage the common rail while attaching it.**

2) Temporarily tighten 2 hex bolts by hand.
3) Tighten 2 hex bolts at a tightening torque of 2.2 kgf·m.

11. Connect the fuel injection pipes.

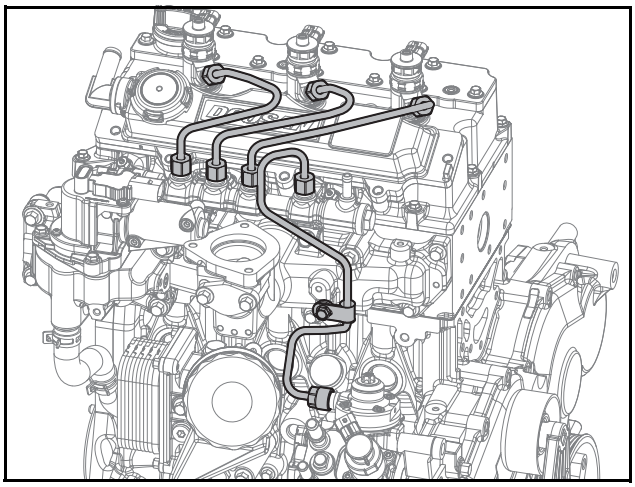

ED18190060

1) Loosen 2 hex bolts of the common rail.
2) Temporarily connect the fuel injection pipes by hand.

⚠ CAUTION

- **Do not bend the fuel injection pipes by force.**
- **Be careful to note the direction when connecting the fuel injection pipes.**
- **Assemble the nut on one side of the fuel injection pipe first, and then the nut on the other side to connect the round part of the pipe to the correspondent part correctly.**
- **Do not reuse fuel injection pipes and clamp; replace them with new ones. Reusing fuel injection pipes and clamp may allow foreign substances into the fuel pipes or oil leaks from the bolt clamping to occur, causing a critical fault in engine performance.**

3) Tighten 2 hex bolts of the common rail at a tightening torque of 2.2 kgf·m.
4) Tighten the nuts of the fuel injection pipe, which are connected to the common rail and the injector, at a tightening torque of 3.0 kgf·m.
5) Tighten the nuts of the fuel injection pipe, which are connected to the common rail and the fuel injection pump, at a tightening torque of 3.0 kgf·m.

12. Connect the fuel return hose.

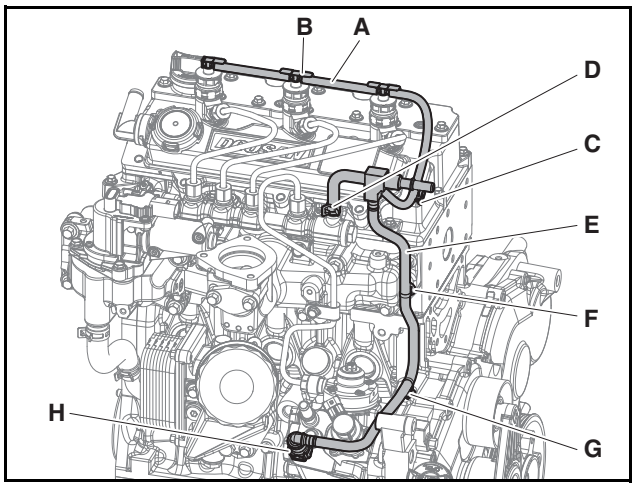

ED18190059

1) Press the fuel return hose into the end of the nipple and connect it.

⚠ CAUTION

- **Be careful to note the direction when connecting the fuel return hose.**
- **The injector should be fully connected with the hose.**
- **Be careful to avoid damage for fuel return hose of injector.**
- **Don't press on the fuel hose, don't drop heavy tool like as spanner on engine, don't step on fuel hose, don't stand on engine.**
- **If the fuel hose are broken by wrong handling, it is possible fire.**

2) Mount 4 hose clips.
3) Mount the hose clips.

⚠ CAUTION

Fix the handle of hose clip to face the front of the engine.

4) Tighten the flange hex bolts.
5) Mount the fixing clips.

13. Mount the rear and front lifting hooks.

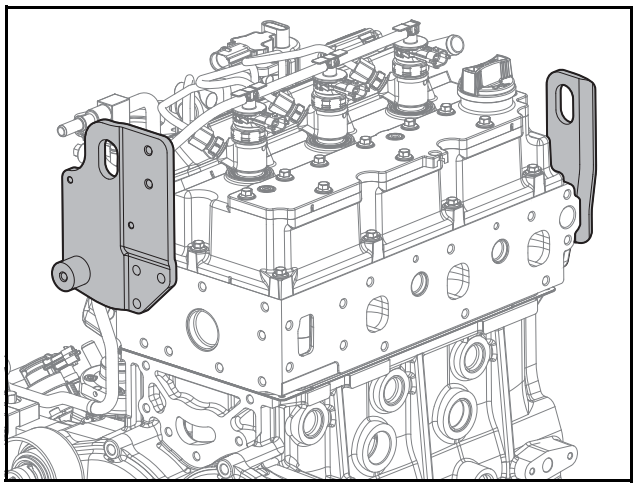

ED18190058

1) Mount the rear lifting hook.
2) Tighten 2 flange hex bolts at a tightening torque of 4.4 kgf·m.
3) Mount the front lifting hook.
4) Tighter 3 flange hex bolt at a tightening torque of 2.2 kgf·m.

14. Attach the water pump.

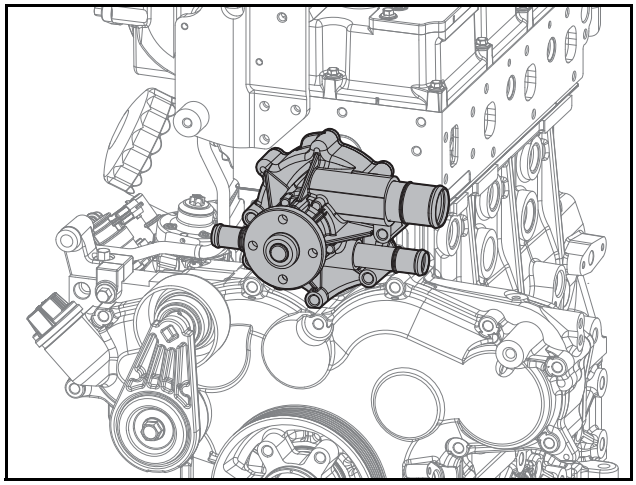

ED18190057

1) Align the gasket with the stud bolts and mount it.
2) Align the coolant pump with the stud bolts and attach it.
3) Tighten 4 hex bolts and 2 flange hex nuts at a tightening torque of 2.2 kgf·m.

⚠ CAUTION

- **Do not allow the gasket to protrude from or be to one side of the coolant pump.**
- **Be careful not to damage the gasket while mounting it.**

15. Attach the water pump pulley.

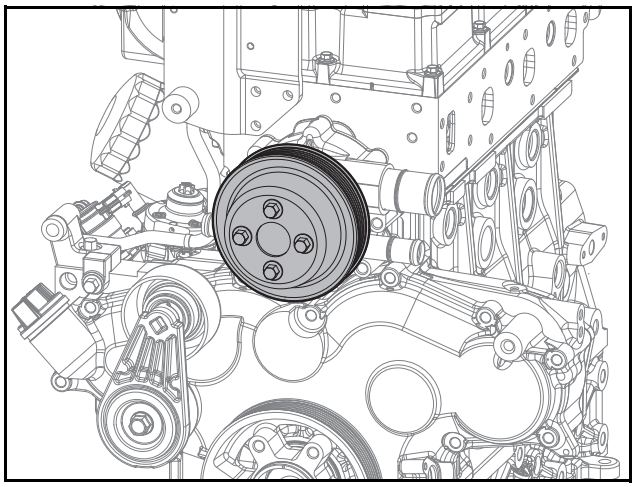

ED18190056

1) Attach the water pump pulley.
2) Tighten 4 hex bolts at a tightening torque of 2.2 kgf·m.

16. Attach the heat screen.

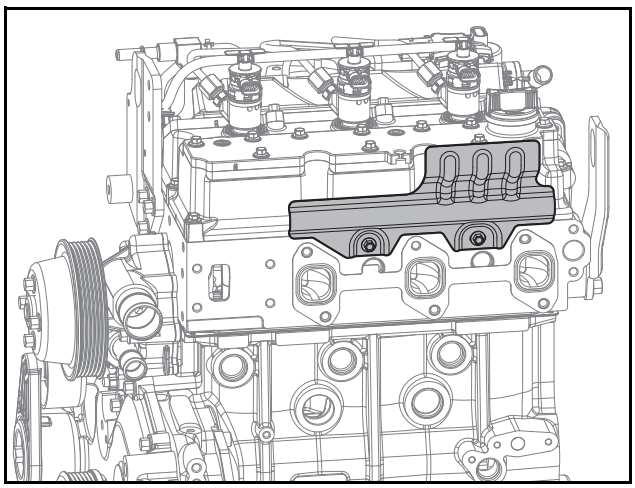

ED18190088

1) Mount the heat screen.
2) Tighten 2 flange hex bolts at a tightening torque 1.25 ±0.1 kgf·m.

⚠ CAUTION

- **Be careful to note the direction in which the gasket is mounted. Mount the gasket so that the TOP mark faces the front of the engine.**
- **Be careful not to damage the gasket while mounting it.**

17. Attach the exhaust manifold.

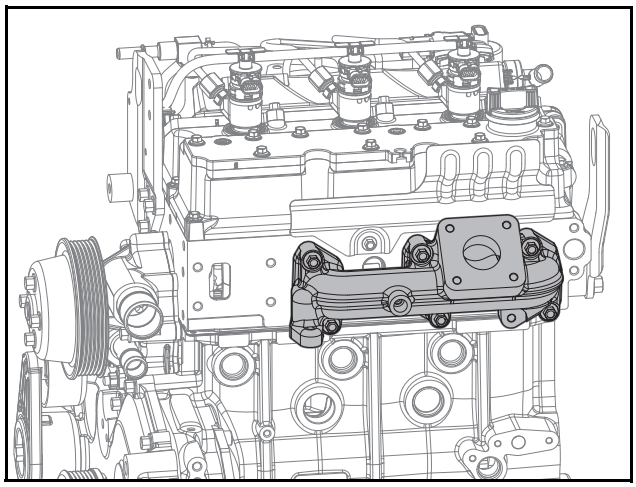

ED18190055

1) Mount the gasket so that the TOP mark faces the top surface and the front of the engine.
2) Attach the exhaust manifold.
3) Apply torque as follow below sequence.
   - Tightening torque: 3.4 ±0.3 kgf·m.
4) Apply check torque as follow below sequence again.
   - Tightening torque: 3.4 ±0.3 kgf·m.

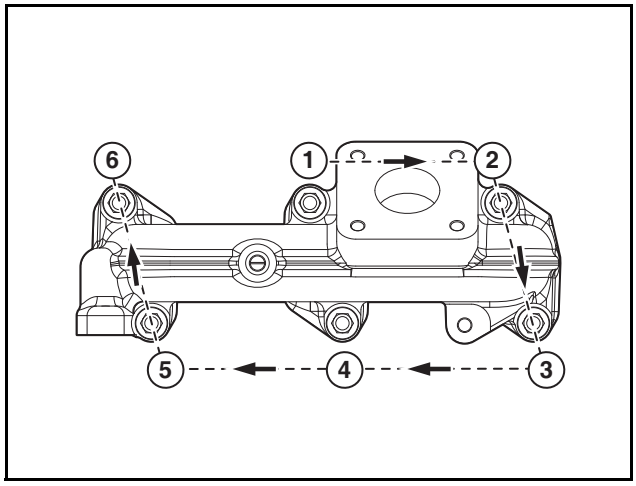

EDM01200172

18. Mount the thermostat.

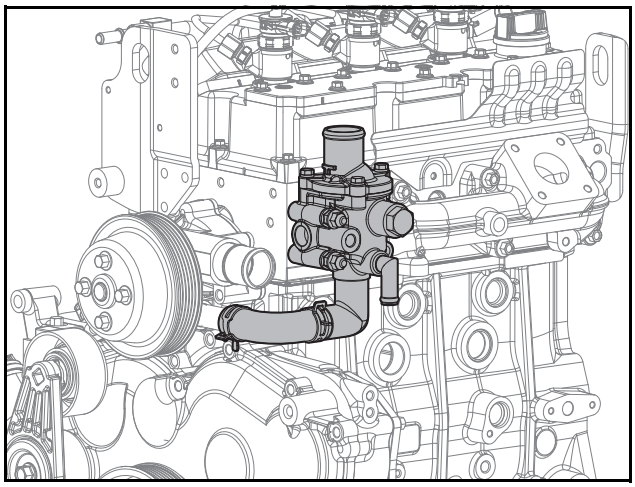

ED18190054

1) Mount the thermostat to the cylinder head.
2) Tighten 2 flange hex bolt, 2 space bolt and 2 flange hex nut as a tightening.
3) Tighten 3 flange hex bolts at a tightening torque of 2.2 kgf·m.
4) Connect the rubber hose.
5) Mount the hose clamps.

⚠ CAUTION

- **After mounting the hose clamps, make the protrusion face the cylinder head side to prevent interference between the protrusion and the coolant pump pulley.**
- **Do not use the hose clamps more than twice; replace them with new ones.**

19. Attach the EGR cooler.

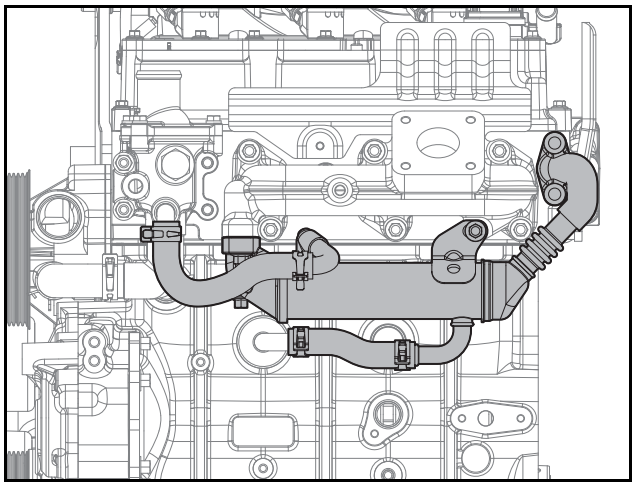

ED18190053

⚠ CAUTION

- **Be careful to note the direction when mounting the EGR cooler.**
- **Be careful not to damage the gasket while mounting it.**

1) Mount the EGR cooler and gaskets to the exhaust manifold and cylinder head.
2) Tighten 3 flange hex bolts at a tightening torque of 3.1 kgf·m. (exhaust manifold side)
3) Tighten 2 flange hex bolts at a tightening torque of 2.2 kgf·m. (cylinder head side)
4) Assemble 2 hoses and clamps.

⚠ CAUTION

Do not reuse the clamps if it has permanent deformation by irregular shape.

20. Assemble the turbocharger.

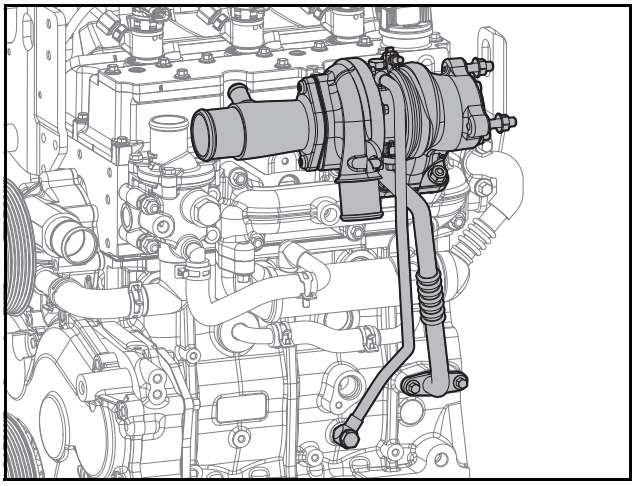

ED18190052

1) Connect the oil return pipe and gasket to the turbocharger.
2) Tighten 2 flange hex bolts at a tightening torque of 1.25 ±0.12 kgf·m.
3) Mount the turbocharger and the gasket to the exhaust manifold.

⚠ CAUTION

- **Be careful to note the direction when mounting the gasket.**
- **Be careful not to damage the gasket while mounting it.**
- **Do not reuse gaskets; replace them with new ones.**

4) Tighten 4 flange hex nuts at a tightening torque of 2.2 kgf·m.
5) Assemble the gasket between oil return pipe and cylinder block. Tighten 2 flange hex nuts at a tightening torque of 1.0 kgf·m.

⚠ CAUTION

Do not reuse the clamp if it has permanent deformation by irregular shape.

6) Temporary tighten 2 hollow screws to the oil delivery pipe manually.
7) Tighten 2 hollow screws at a tightening torque of 1.9 kgf·m.

⚠ CAUTION

- **Do not reuse the oil supply pipe.**
- **Tighten the hollow screw at the cylinder block side first, and then tighten the other at the turbocharger side.**

Note) During assembly, add 3 cc of clean oil to the turbocharger oil inlet.

21. Mount the oil level gauge and the coolant hose.

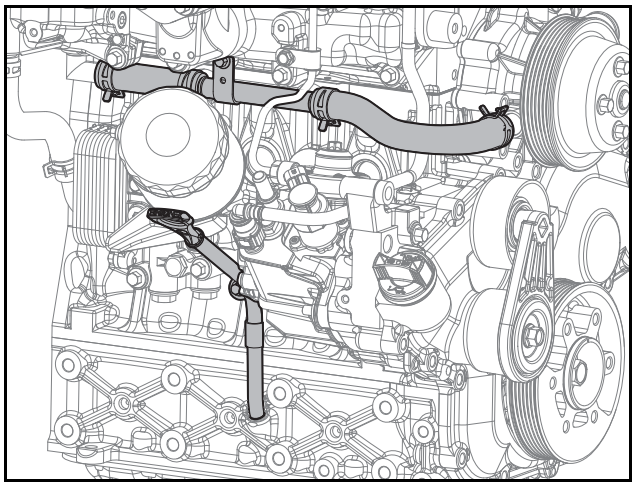

ED1819089

1) Replace the O-ring of the oil level gauge guide tube with a new part.
2) Insert the oil level gauge guide tube in the cylinder block and connect it.
3) Tighten flange hex bolts at a tightening torque of 1.0 kgf·m.
4) Mount the oil level gauge.

⚠ CAUTION

Make the handle of the oil level gauge face the reverse direction from the center of the engine.

5) Connect the coolant hose.
6) Mount the hose clamps.

⚠ CAUTION

Do not use hose clamps more than twice; replace them with new ones.

7) Tighten flange hex bolts at a tightening torque at a tightening torque of 2.2 kgf·m.

22. Connect the throttle (inlet pipe) and the intake stake.

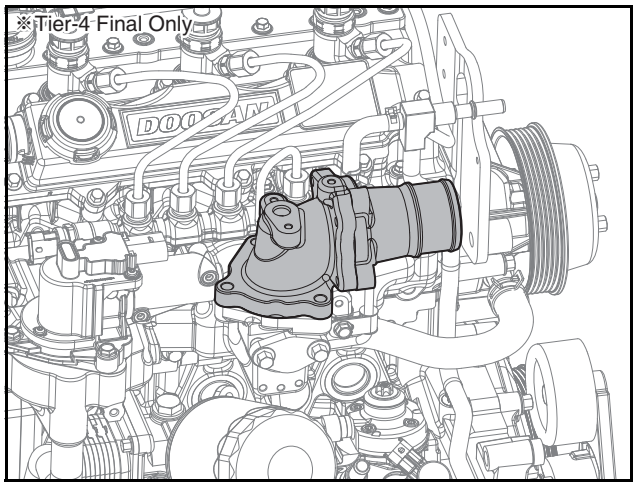

ED18190180

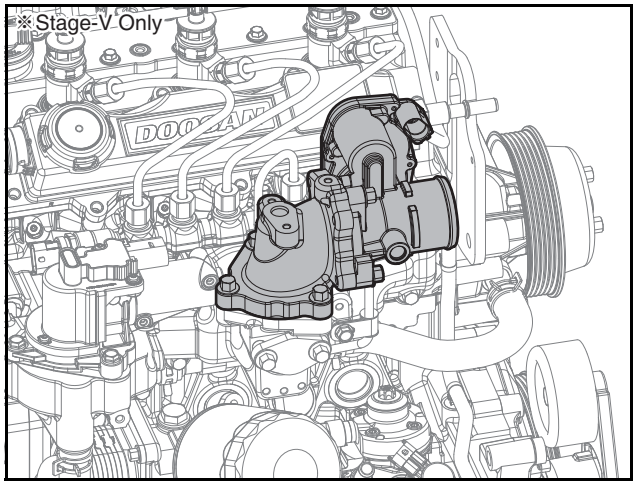

ED18190051

1) Mount the intake stake and the gasket to the intake manifold.
2) Tighten 3 hex bolts at a tightening torque of 2.2 kgf·m.

3) Connect the throttle (inlet pipe) and the gaskets to the intake stake.
4) Tighten 3 hex bolts at a tightening torque of 2.2 kgf·m.

⚠ CAUTION

- **Be careful to note the direction when mounting the gasket.**
- **Be careful not to damage the gasket while mounting it.**

23. Connect the breather hose.

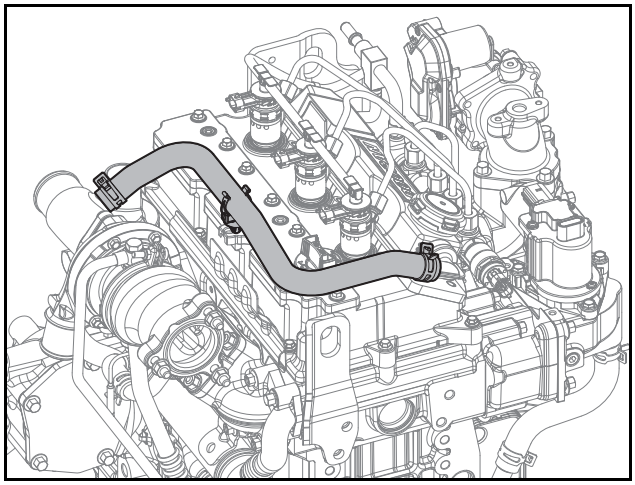

ED18190050

1) Connect the breather hose.
2) Mount the hose clamps.

⚠ CAUTION

Do not reuse the clamp if it has permanent deformation by irregular shape.

Check of Warpage of Push Rod

1. Check warpage of the push rod.

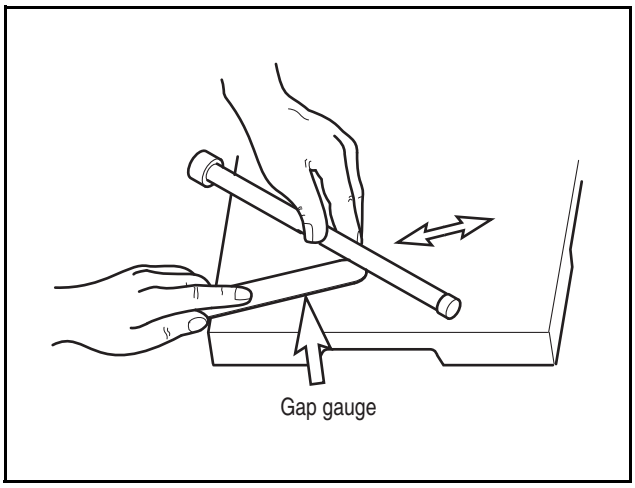

EDL0213007A

1) Put the push rod on the surface plate.
2) Measure the warped degree with the gap gauge as rolling the push rod.

Item	Specified Value
Warpage of push rod	0.5 mm

Camshaft

Disassembly of Camshaft

1. Detach the camshaft.

Note) Refer to Chapter 5 (Procedure of Disassembling an Engine)

2. Remove the camshaft gear (A).

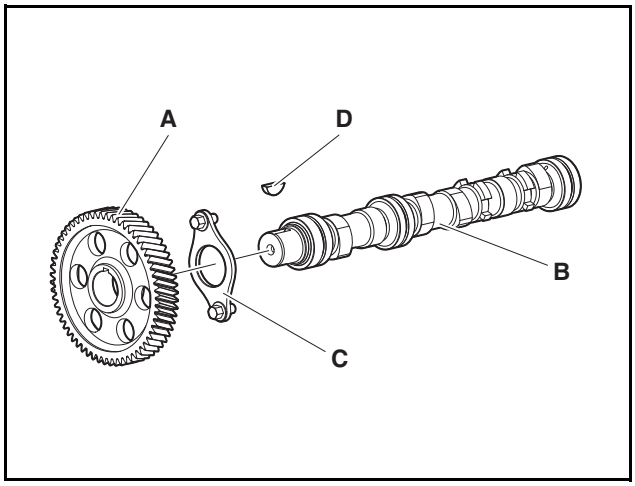

ED18190033

1) Heat the camshaft gear (A) at 180 ±10°C.
2) Remove the camshaft gear (A) and the thrust washer (C) from the camshaft (B).

⚠ CAUTION

- **NEVER let the camshaft gear heat to a temperature exceeding 200°C.**

Assembly of Camshaft

1. Mount the cam gear (A).

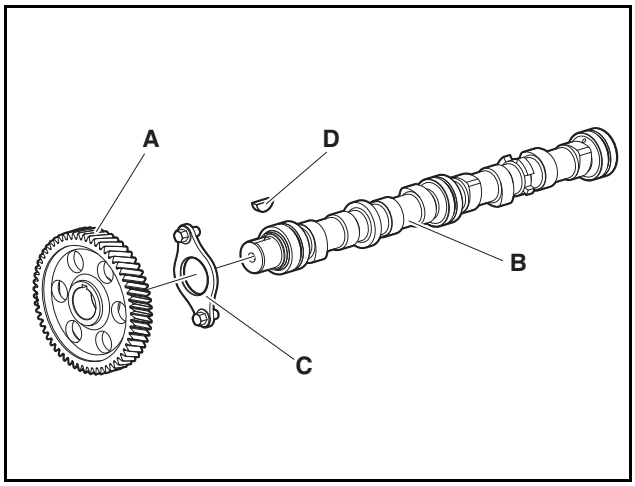

ED18190033

1) Mount the thrust washer (C) on the camshaft (B).
2) Mount the woodruff key (D), heat the cam gear (A) at the temperature of 180 ±10°C, and then press in the camshaft into the cam gear.

⚠ CAUTION

- **NEVER let the cam gear heat to a temperature exceeding 200°C.**
- **The gear engraving should face outward.**

2. Attach the camshaft.

Note) Refer to Chapter 5 (Procedure of Assembling an Engine)

Measurement of Camshaft Journal Outside Diameter

1. Set the gauge.
2. Remove foreign substances from the camshaft.
3. Measure the outside diameter of the camshaft journal.

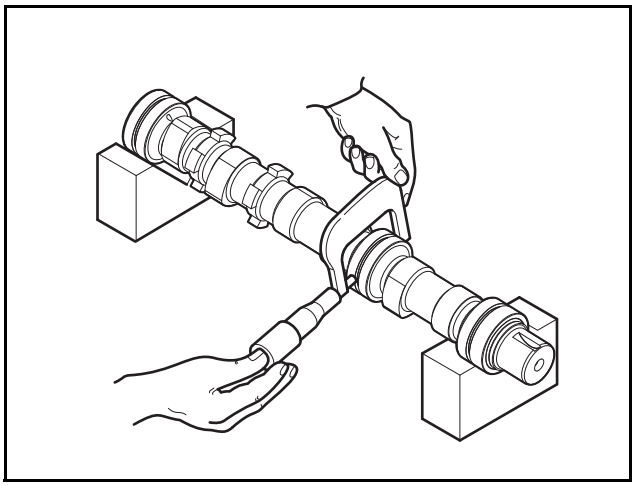

ED18190034

1) For 3ea camshaft journals, measure total 6 points of the outside diameters: front and rear.
2) Measure 2 points (vertical and horizontal) of the outside diameters of the camshaft journals.
3) The standard measurement value of the outside diameter of the camshaft journal is within the range of 44.919 ~ 44.935 mm.

Item	Specified Value
Camshaft journal	44.919 ~ 44.935 mm

Note) If the outside diameter is out of the allowable limit, replace the camshaft with a new one.

Note) Check whether the camshaft surface is cracked or scratched.

Note) If the wear is slight, polish it with the oil-contained whetstone or fine sandpaper. If the crack or scratch is serious, replace the camshaft with a new one.

Note) For polishing the camshaft, use the sandpaper dipped in oil.

Measurement of Camshaft

1. Check the camshaft offset.

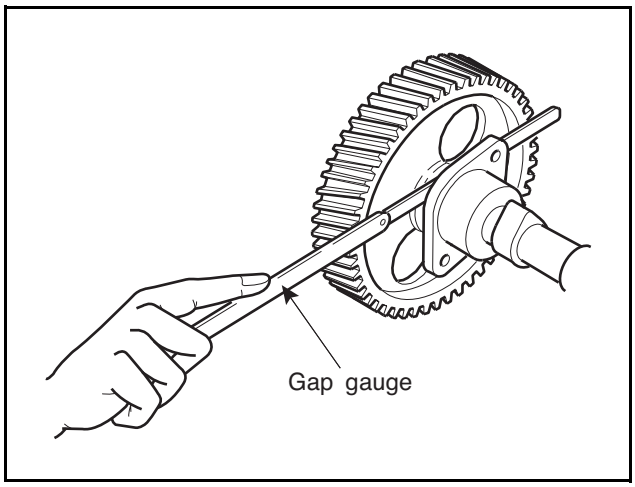

EDL0213003A

1) Move the camshaft gear to the opposite side of the cylinder block.
2) Measure the gap between the thrust washer and the camshaft gear with the gap gauge.

Item	Specified Value
Camshaft offset	0.1 ~ 0.2 mm

Note) Check if the gap is within the range of 0.1 ~ 0.2 mm.

Note) If the offset is too large, replace the thrust washer with a new one.

2. Measure warpage of the camshaft.

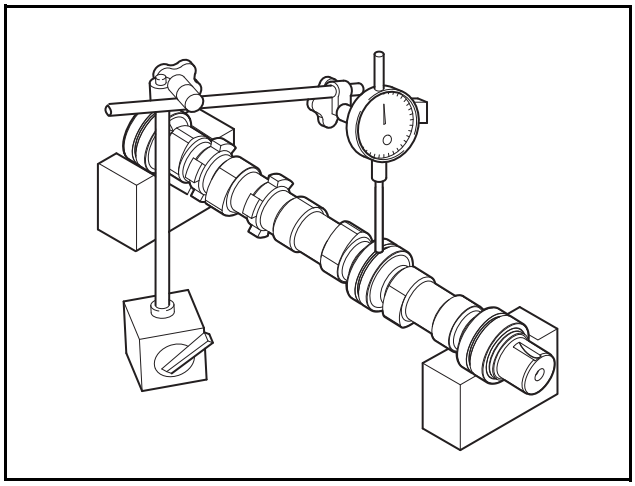

ED18190035

1) Put the camshaft on two V-blocks.
2) Check the degree of warpage of the camshaft with the dial gauge.

Note) If the warpage is out of the allowable limit, replace the camshaft with a new one.

Timing gear case

Detaching Timing Gear Case

1. Remove the V-belt.

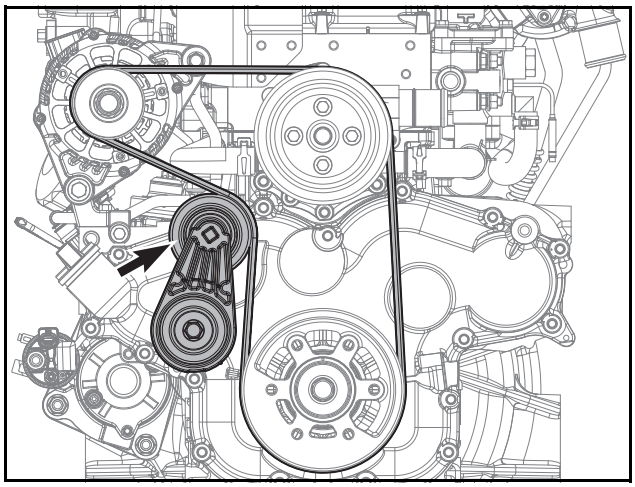

ED18190044

1) Turn the auto tensioner counterclockwise by using a quadrangular groove at the top of the auto tensioner pulley (Use a 10 mm x 10 mm quadrangular tool).
2) Remove the belt wound around the auto tensioner pulley by using a space generated by the rotation of the auto tensioner.

2. Remove the crankshaft pulley.

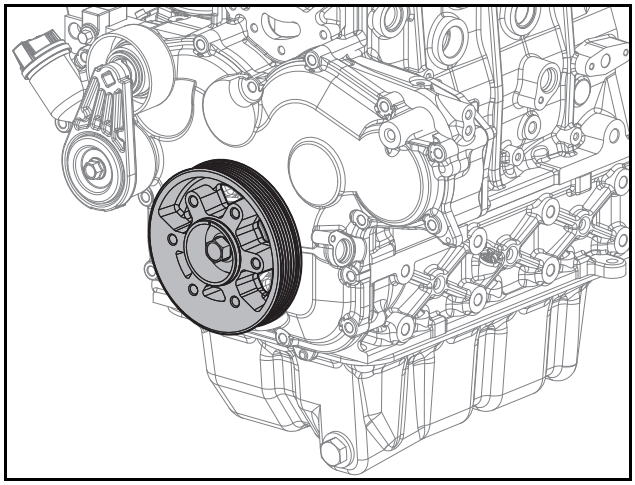

ED1819074

1) Loosen the flange hex bolt.
2) Remove the crankshaft pulley.

⚠ CAUTION

Be careful not to damage the oil seal.

3. Remove the timing gear case.

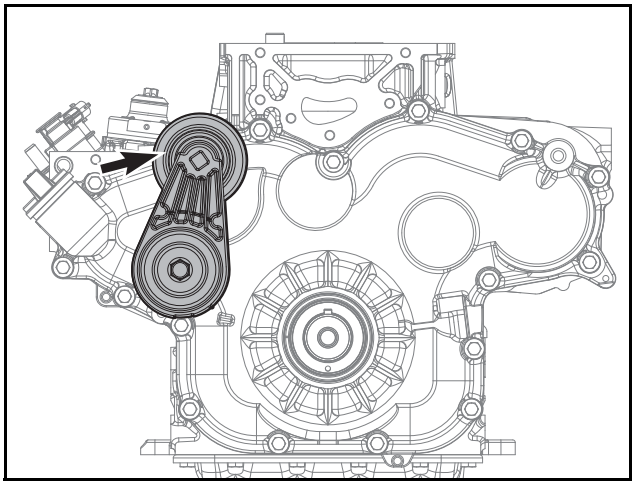

ED24190138

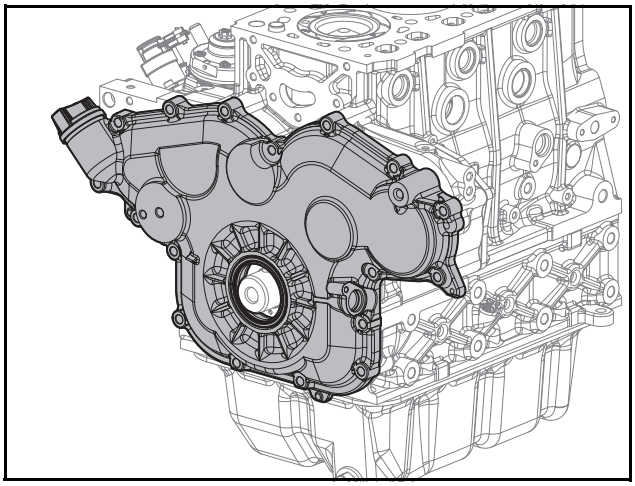

ED1819076

1) Loosen the flange hex bolt and remove the auto tensioner.
2) Loosen the fixing bolt and remove the crank speed sensor.
3) Loosen 16 hex bolts.
4) Remove the timing gear case.

⚠ CAUTION

Do not reuse the oil seal; replace them with new ones.

Assembly of Timing Gear Case

1. Attach the timing gear case.

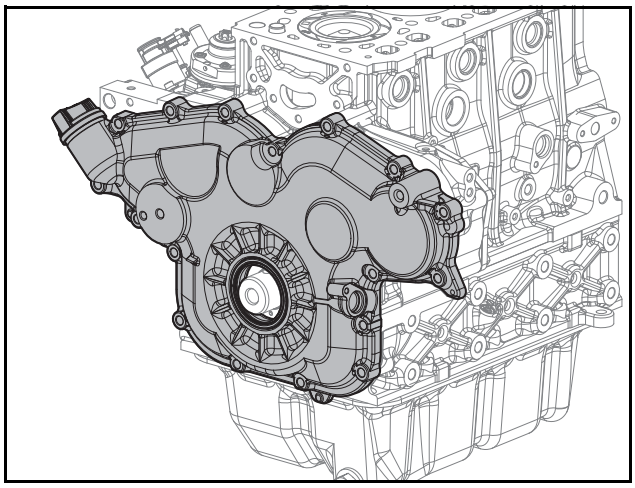

ED1819076

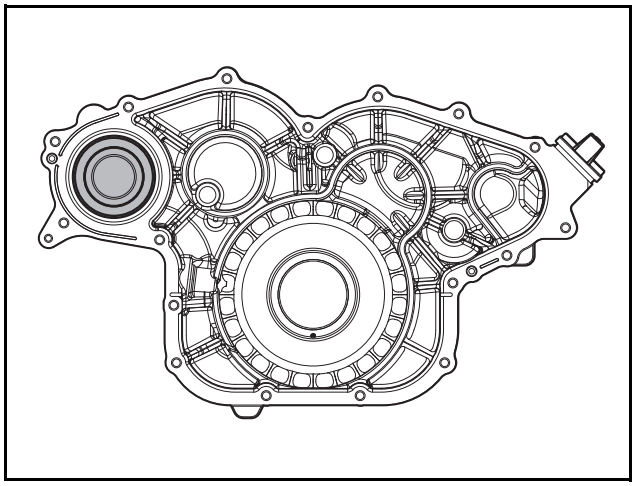

EDM02200047

Note) Apply as follows and use TB1217H equivalent product.

Note) Apply to the surface of TGC cover with ø2.5 ±0.5 mm thickness.

Note) The PTO bearing is included in the timing gear case. Hence, in the event of a bearing defect, replace the entire TGCC (Timing Gear Case Cover) assembly.

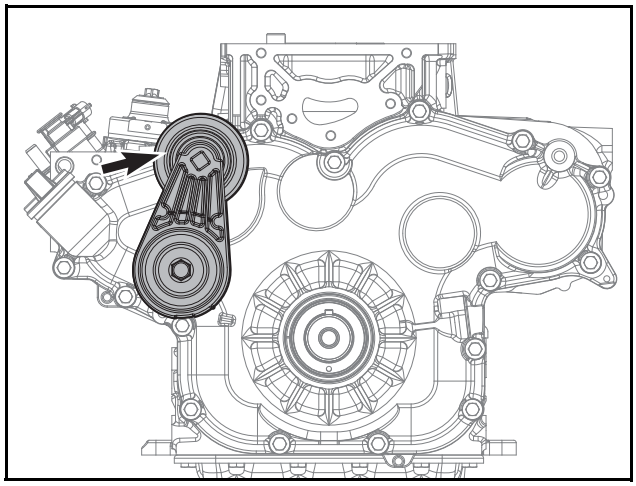

ED24190138

1) Make the assembly surface of the timing gear case face the ground.
2) Mount the front oil seal to the front oil seal assembly jig.
3) Align the front oil seal assembly jig where the front oil seal is mounted to the timing gear case and beat it with a rubber hammer.
4) when the front oil seal is inserted to the timing gear case, pull off the front oil seal assembly jig.

⚠ CAUTION

- **Be careful in noting the direction of the oil seal assembly and ensuring that the oil seal surface fasces the outside of the engine.**
- **Be careful of the depth of the oil seal when attaching it.**
- **Be careful not to damage the oil seal.**
- **Attach the oil seal without applying lubrication. coolant, fuel, sealant (TB1217H), or silicon.**
- **Remove foreign substances such as residues from the oil seal assembly bore.**
- **Do not reuse the oil seal; replace it with a new one.**
- **Be careful not to damage the oil seal when attaching it.**

5) Remove the foreign substances on the timing gear case assembly surface and clean it with a dry cloth.

6) Apply sealant (TB1217H) to the timing gear case assembly surface with the diameter of Ø2.5 ±0.5 mm.

⚠ CAUTION

- **Be careful that the timing gear case has been attached in the right direction.**
- **Attach parts within five minutes of applying sealant (TB1217H) onto the parts.**
- **Do not start the engine or load pressure for 25 minutes after applying sealant (TB1217H) onto the parts**

7) Align the timing gear case with the pin and attach it.
8) Tighten 16 hex bolts at a tightening torque of 2.2 kgf·m.
9) Mount the crank speed sensor and then tighten the fixing bolt.

2. Attach the crankshaft pulley.

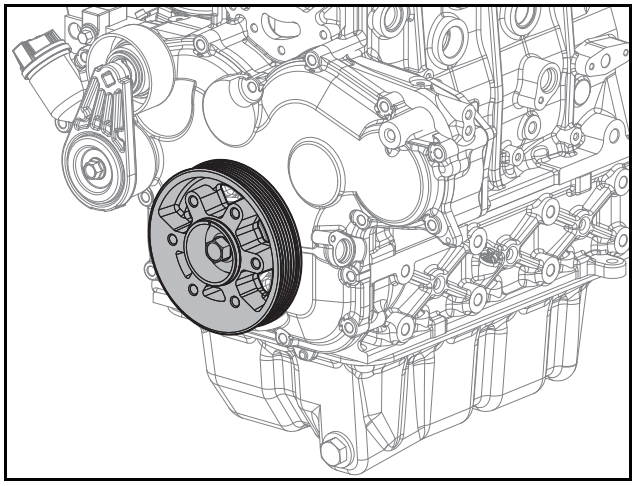

ED1819074

1) Align the crankshaft pulley to the pin and attach it.
2) Tighten flange hex bolts at a tightening torque of 26 kgf·m.

⚠ CAUTION

- **Be careful not to damage the oil seal.**
- **Fix the crankshaft to allow the flange hex bolts to be tightened with the specified torque.**

3. Attach the V-belt.

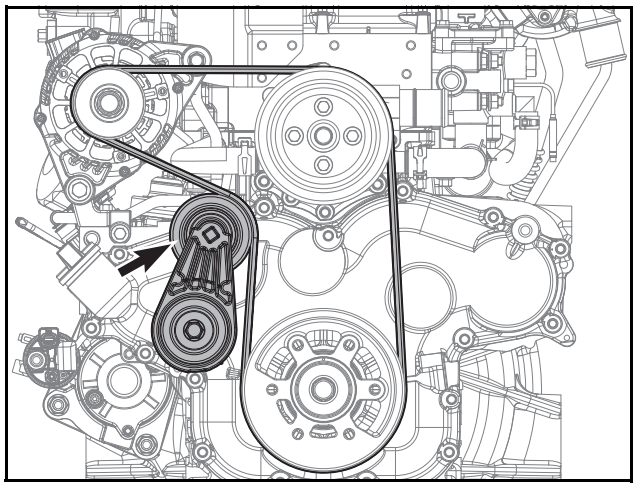

ED18190044

1) Wind a new belt around all pulleys except for the auto tensioner.
2) Turn the auto tensioner counterclockwise by using a quadrangular groove at the top of the auto tensioner pulley (Use a 10 mm x 10 mm quadrangular tool).
3) Wind the belt around the auto tensioner pulley by using a space generated by the rotation of the auto tensioner, and then naturally release the tensioner that has been pulled counterclockwise.

⚠ CAUTION

For checking and measuring the belt tension, refer to Belt Tension in Chapter 12 (Others/Driving Units).

Flywheel housing

Disassembly of Flywheel Housing

1. Detach the starter.

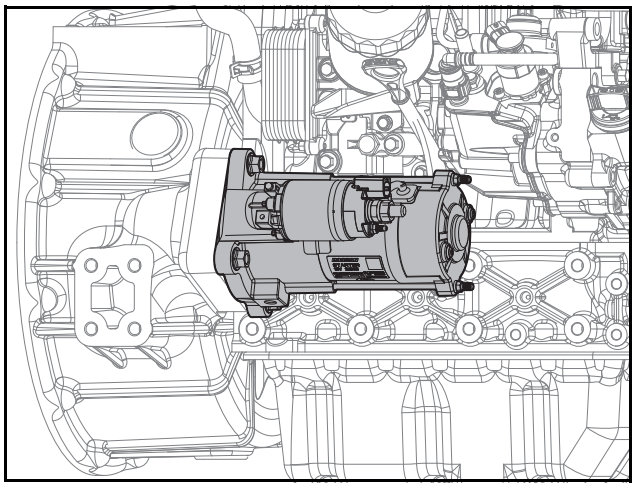

ED18190046

1) Loosen 3 flange nuts.
2) Detach the starter.

2. Remove the flywheel.

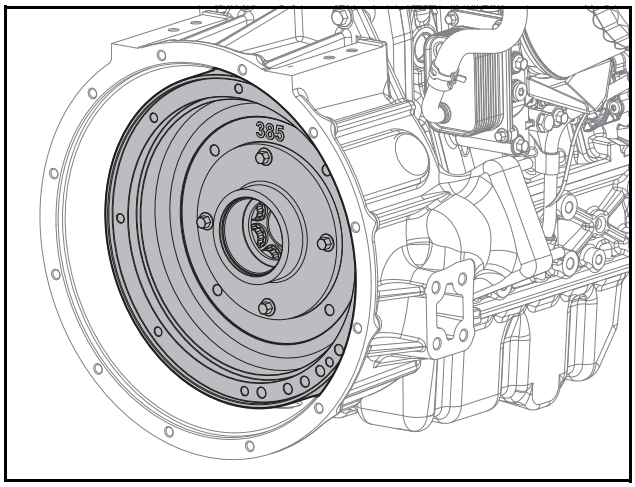

ED18190047

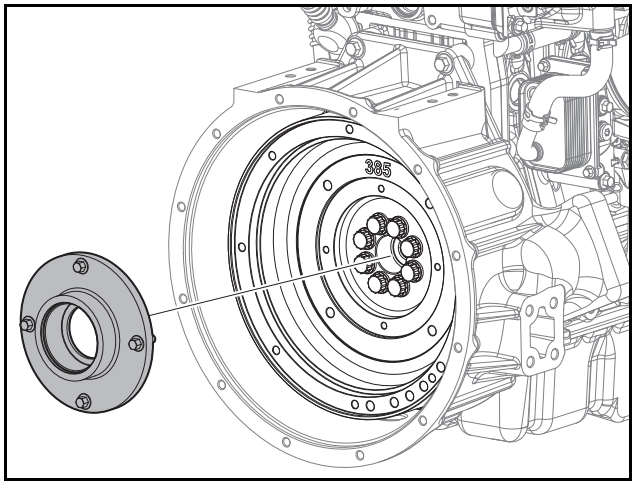

ED18190048

1) Loosen 8 flange hex bolts.
2) Remove the flywheel.

3. Remove the flywheel housing.

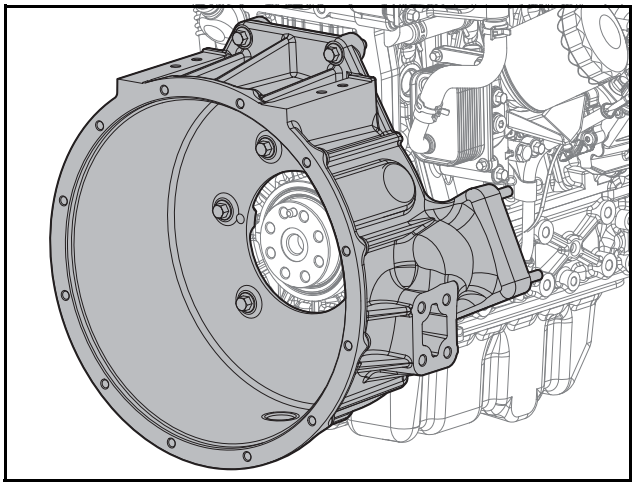

ED18190049

1) Loosen 8 hex bolts.
2) Remove the flywheel housing.

Assembly of Flywheel Housing

1. Attach the flywheel housing.

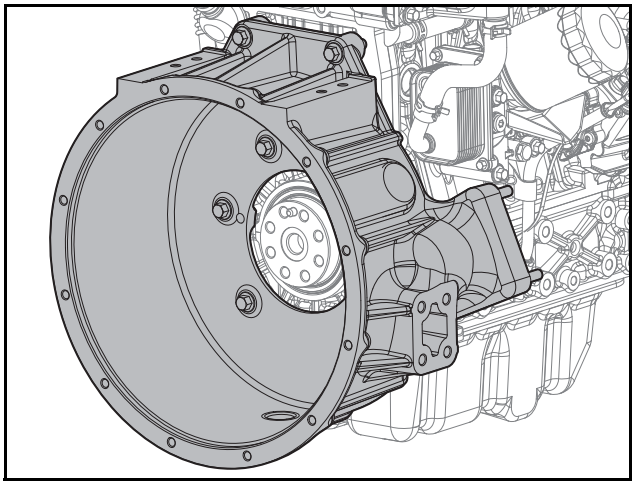

ED18190049

1) Align the flywheel housing to the pin and attach it.
2) Tighten 8 hex bolts at a tightening torque of 6.2 kgf·m.

2. Mount the flywheel.

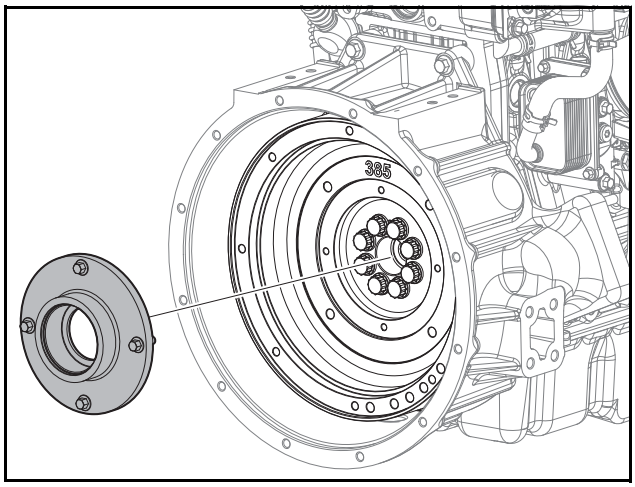

ED18190048

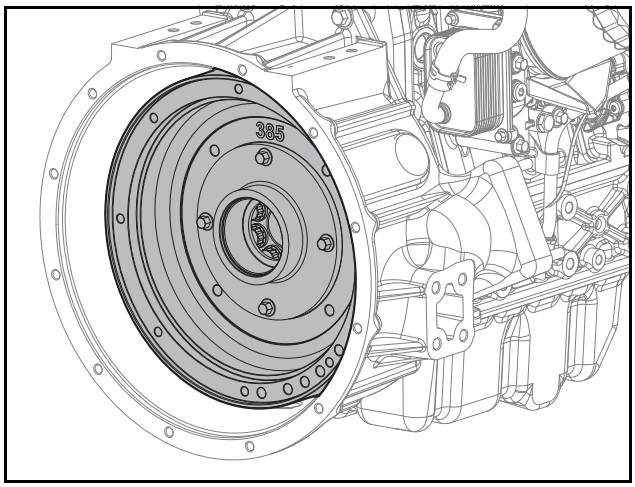

ED18190047

1) Mount the flywheel.
2) Tighten 8 Flange hex bolts at tightening bolt torque.

Flywheel bolt (43 mm, option)	1st: 7 ±0.35 kgf·m/2nd: 45° ±4°
Flywheel bolt (25 mm, option) for flat type flywheel	17 ±0.85 kgf·m

⚠ CAUTION

Be careful that no foreign material (oil, etc.) is present in the bolt and tap.

3. Attach the starter.

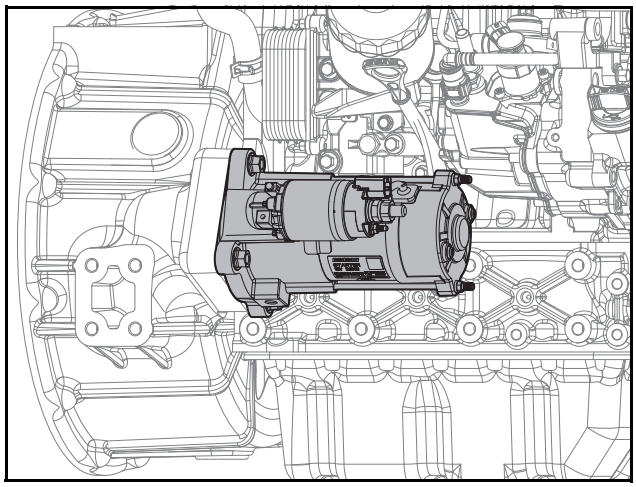

ED18190046

1) Align the starter with the pin and attach it.
2) Tighten 3 flange nuts at a tightening torque of 4.4 ±1.1 kgf·m.

Breather

Disconnection of Breather Hose

1. Disconnect the breather hose.

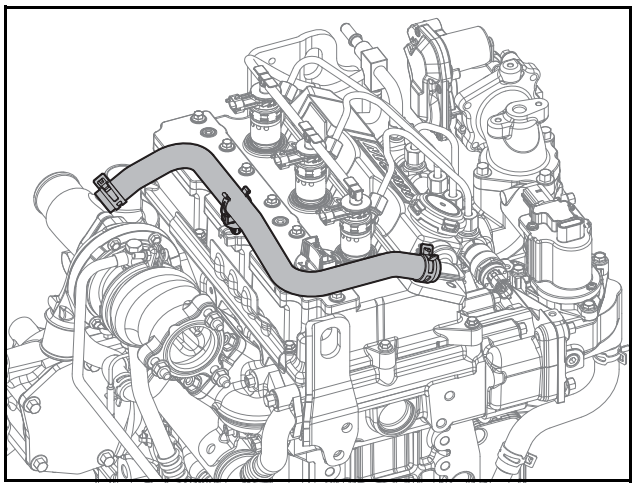

ED18190050

1) Remove the hose clamps.
2) Disconnect the breather hose.

Connection of Breather Hose

1. Connect the breather hose.

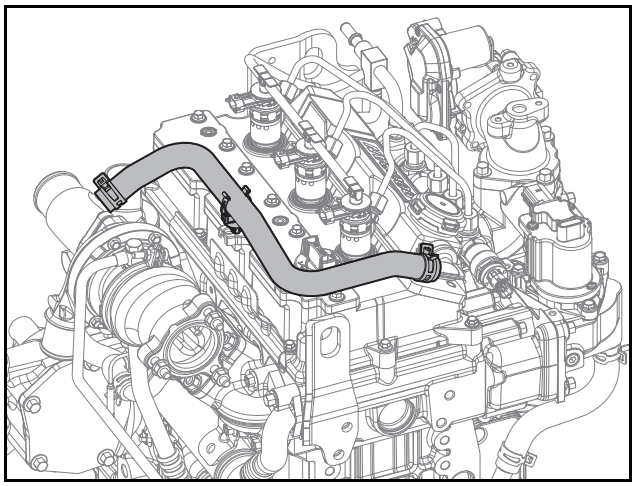

ED18190050

1) Connect the breather hose.
2) Mount the hose clamps.

⚠ CAUTION

Do not reuse the clamp if it has permanent deformation by irregular shape.

Cylinder head cover

Disassembly of Cylinder Head Cover

1. Disconnect the breather hose.

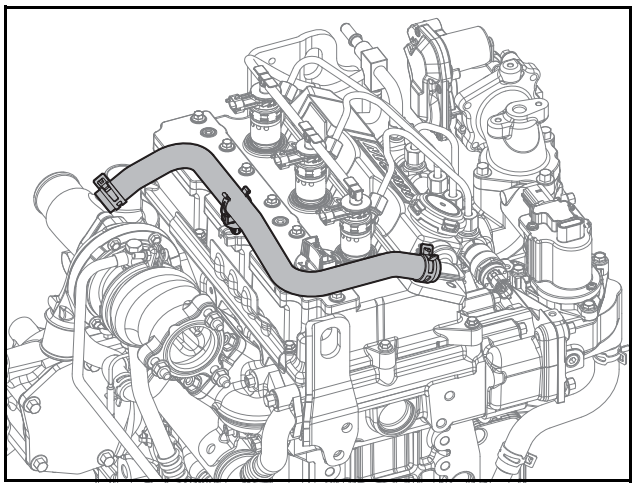

ED18190050

1) Remove the hose clamps.
2) Disconnect the breather hose.
2. Disconnect the throttle (inlet pipe) and the intake stake.

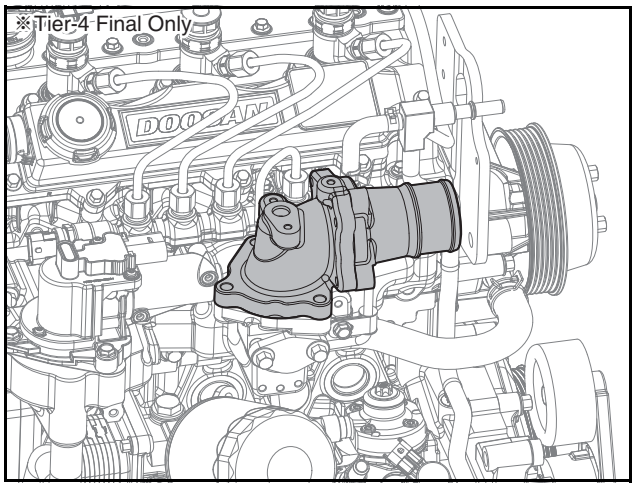

ED18190180

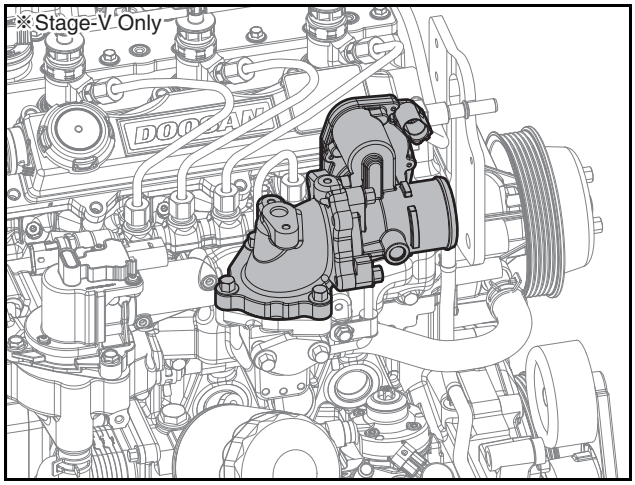

ED18190051

1) Loosen 3 hex bolts.
2) Remove the throttle (inlet pipe) and the gaskets from the intake stake.
3) Loosen 3 hex bolts.
4) Remove the intake stake from the intake manifold.
3. Disconnect the fuel return hose.

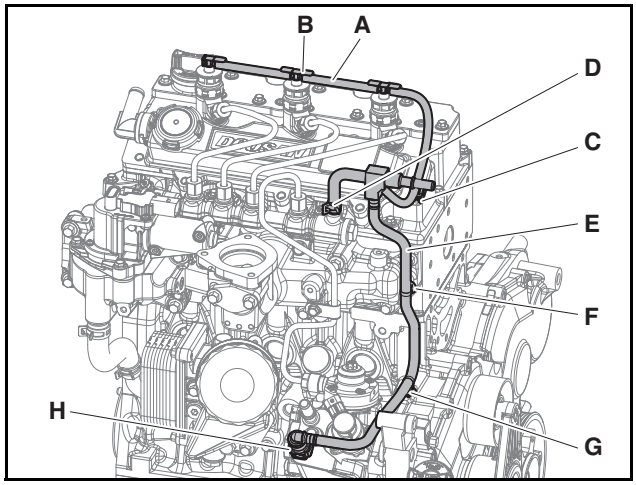

ED18190059

1) Open the adopter (B) of injector return hose (A).
2) Loosen the injector return hose (A).
3) Remove the edge clip (C).
4) Loosen the hose clamp (D).
5) Remove the cable tie (F), (C).
6) Disconnect the quick connector (H).
7) Disassemble the fuel return hose (A) and (E).
4. Disconnect the fuel injection pipes.

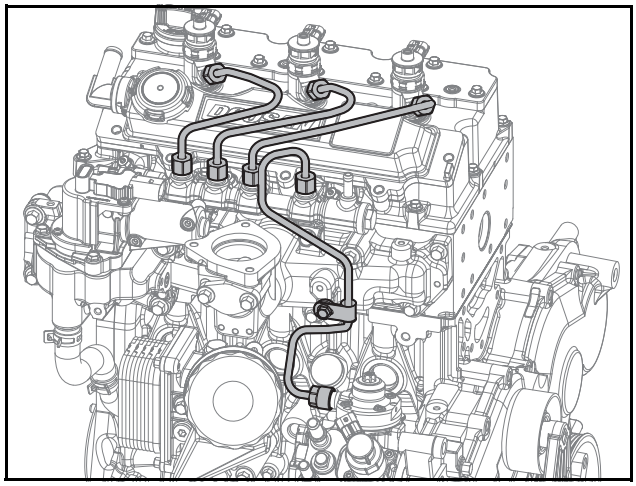

ED18190060

1) Loosen the nuts connected to the injector and the common rail.
2) Disconnect the fuel injection pipes.
3) Loosen the nuts connected to the common rail and the fuel injection pump.

4) Disconnect the fuel injection pipes.

⚠ CAUTION

Do not reuse fuel injection pipes and clamp; replace them with new ones.
If fuel injection pipes and clamp are reused it may allow foreign substances into the fuel pipes or cause oil leaks from bolt clamping and cause a critical fault in engine performance.

5. Detach the common rail.

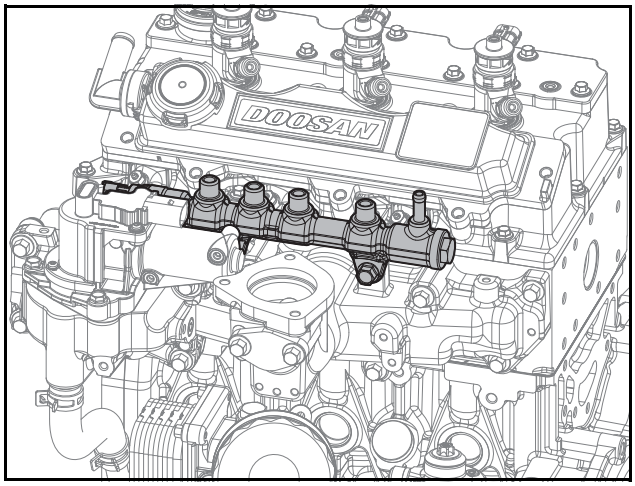

ED18190061

1) Loosen 2 hex bolts.
2) Remove the common rail from the intake manifold.

6. Remove the right cylinder head cover.

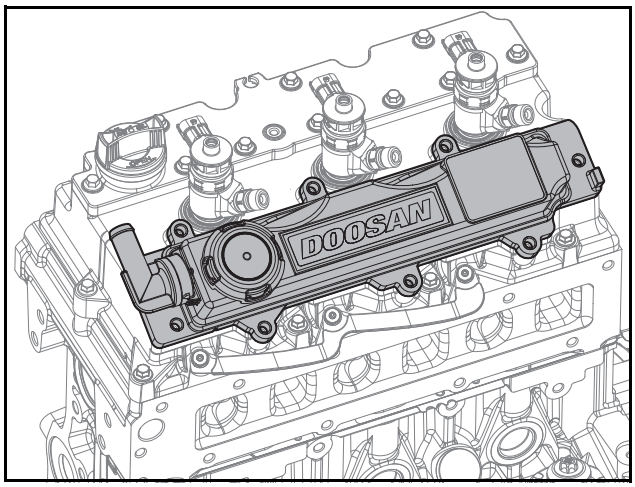

ED18190065

1) Loosen 8 flange hex bolts.
2) Remove the right cylinder head cover.

7. Remove the injector.

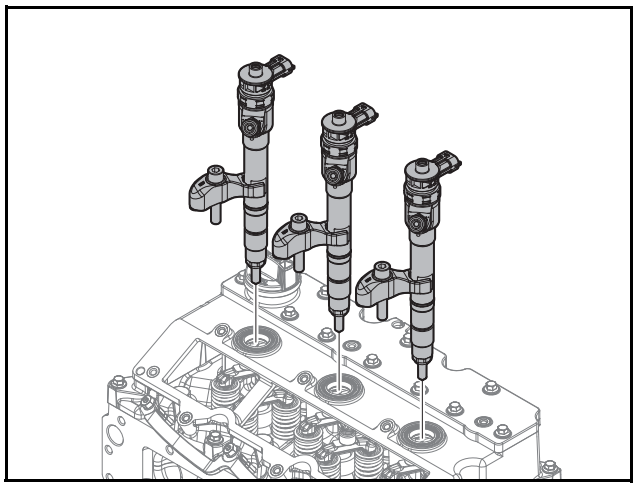

ED18190066

1) Loosen 3 hex bolts.
2) Remove 3 injector fixtures.
3) Remove 3 injectors.

Note) Remove the cylinder head cover and remove the injector seal ring washers.

⚠ CAUTION

- **Be careful not to damage the injector oil seal of the cylinder head cover.**
- **Remove it by turning the injector slowly from left to right.**
- **Do not reuse the injector seal ring washers. Reuse of the injector seal ring washers may cause critical damage to the engine due to unstable combustion.**

8. Disconnect the glow plugs.

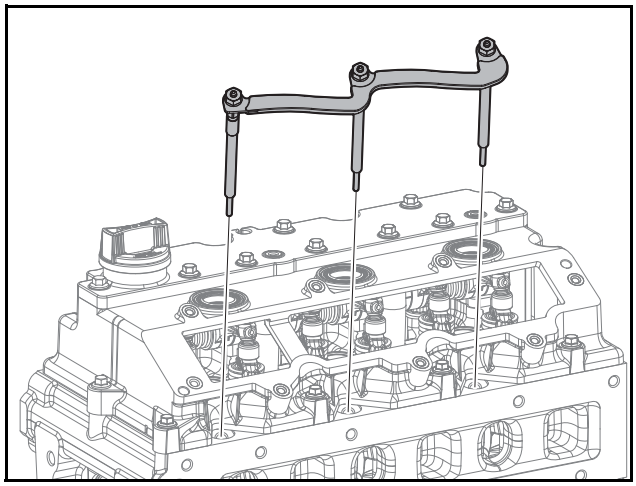

ED18190067

1) Loosen 3 hex nuts.
2) Remove the electric connector.
3) Disconnect 3 glow plugs.

9. Remove the cylinder head cover.

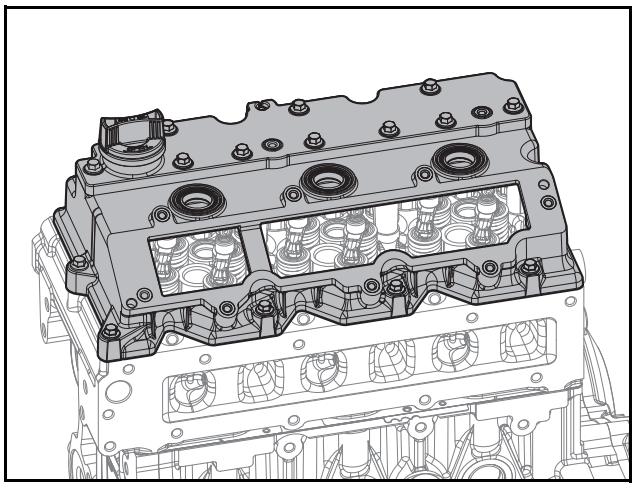

ED18190068

1) Loosen 10 hex bolts.
2) Remove the cylinder head cover.

Assembly of Cylinder Head Cover

1. Attach the cylinder head cover.

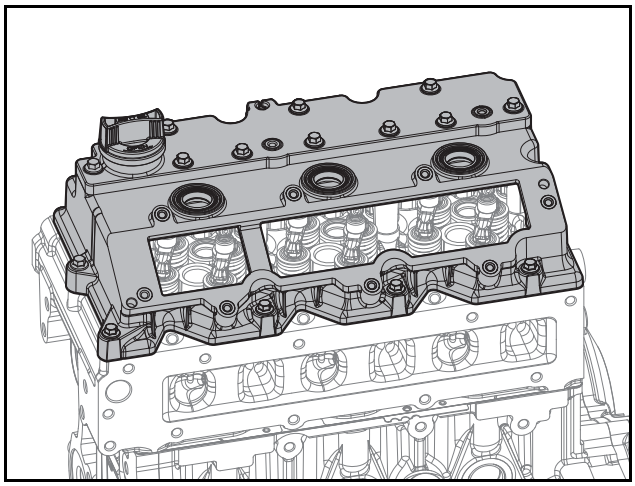

ED18190068

1) Attach the cylinder head cover.
2) Temporarily tighten 10 hex bolts.
3) Tighten 10 hex bolts at a tightening torque of 1 ±0.1 kgf·m.

⚠ CAUTION

- **Be careful not to allow the seal ring of the cylinder head cover to get out to the outside.**
- **Tighten the hex bolts of the cylinder head cover in the order. The front engine direction is the water pump direction and the rear engine direction is the Drive Plate direction.**

4) Mount the oil injection cap.

2. Connect the glow plugs.

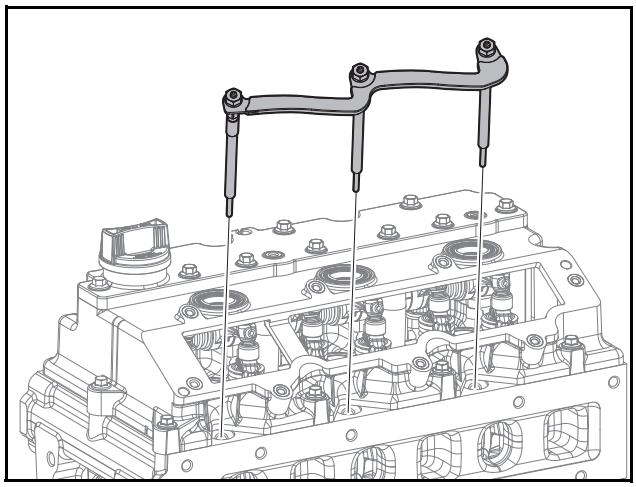

ED18190067

1) Tightening 3 glow plugs to the cylinder head at a tightening torque of 9 ~ 12 N·m.
2) Attach the electric connector.
3) Mount 3 washers.
4) Tighten 3 hex nuts at a tightening torque of 1.3 ~ 2 N·m.

3. Attach the injectors.

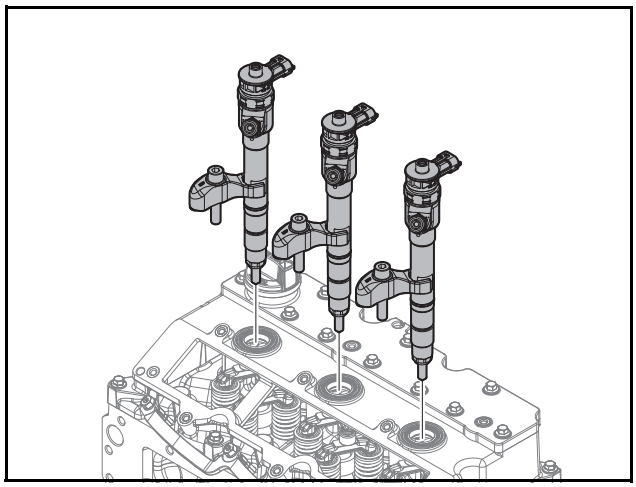

ED18190066

1) Align the injector seal ring washer with the center of the injector hole and mount it.
2) Sufficiently apply engine oil on the cylinder head cover surface where the injectors contact.

3) Attach 3 injectors.

⚠ CAUTION

- **Do not reuse the head cover rubber seal and the injector oil seal but replace with new ones.**
- **Attach injectors by slowly turning them to prevent damage to the cylinder head cover surface which contacts the injectors.**
- **Do not reuse the injector seal ring washers. Otherwise, critical damage to the engine may occur because of unstable combustion.**

4) Mount 3 injector fixtures.
5) Temporarily tighten 3 hex bolts.

⚠ CAUTION

Do not tighten the hex bolts by force when it is difficult to tighten them temporarily. Forced tightening may cause damage to the cylinder head.

6) Tighten 3 hex bolts at a tightening torque of 4.35 ±0.35 kgf·m.

4. Attach the right cylinder head cover.

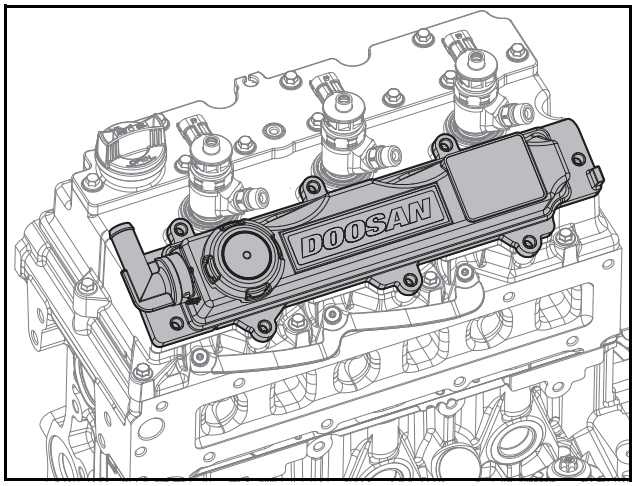

ED18190065

1) Align the right cylinder head cover with the assembly pin hole and attach it.
2) Temporarily tighten 8 flange hex bolts in the order.
3) Tighten 8 flange hex bolts at a tightening torque of 1 ±0.1 kgf·m.

5. Attach the common rail.

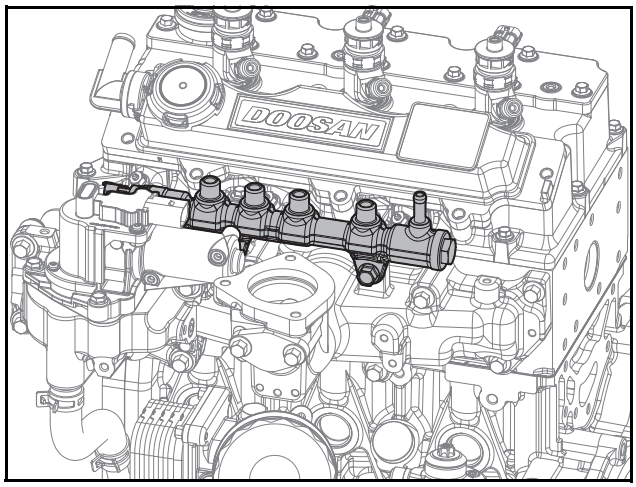

ED18190061

1) Attach the common rail to the intake manifold.

⚠ CAUTION

- **Be careful to note the direction when attaching the common rail.**
- **Be careful not to damage the common rail while attaching it.**

2) Temporarily tighten 2 hex bolts by hand.
3) Tighten 2 hex bolts at a tightening torque of 2.2 kgf·m.

6. Connect the fuel injection pipes.

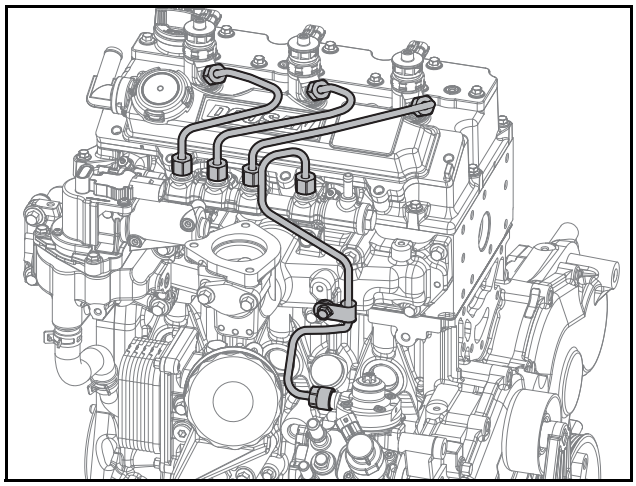

ED18190060

1) Loosen 2 hex bolts of the common rail.

2) Temporarily connect the fuel injection pipes by hand.

⚠ CAUTION

- **Do not bend the fuel injection pipes by force.**
- **Be careful to note the direction when connecting the fuel injection pipes.**
- **Assemble the nut on one side of the fuel injection pipe first, and then the nut on the other side to connect the round part of the pipe to the correspondent part correctly.**
- **Do not reuse fuel injection pipes and clamp; replace them with new ones. Reusing fuel injection pipes and clamp may allow foreign substances into the fuel pipes or oil leaks from the bolt clamping to occur, causing a critical fault in engine performance.**

3) Tighten 2 hex bolts of the common rail at a tightening torque of 2.2 kgf·m.
4) Tighten the nuts of the fuel injection pipe, which are connected to the common rail and the injector, at a tightening torque of 3.0 kgf·m.
5) Tighten the nuts of the fuel injection pipe, which are connected to the common rail and the fuel injection pump, at a tightening torque of 3.0 kgf·m.

7. Connect the fuel return hose.

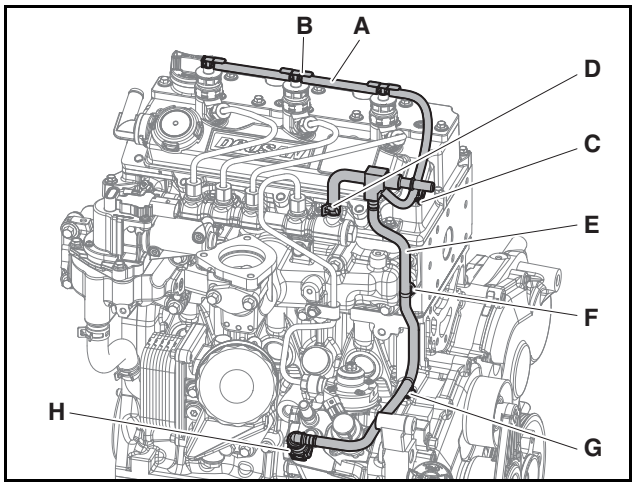

ED18190059

1) Press the fuel return hose into the end of the nipple and connect it.

⚠ CAUTION

- **Be careful to note the direction when connecting the fuel return hose.**
- **The injector should be fully connected with the hose.**
- **Be careful to avoid damage for fuel return hose of injector.**
- **Don't press on the fuel hose, don't drop heavy tool like as spanner on engine, don't step on fuel hose, don't stand on engine.**
- **If the fuel hose are broken by wrong handling, it is possible fire.**

2) Mount 4 hose clips.
3) Mount the hose clips.

⚠ CAUTION

Fix the handle of hose clip to face the front of the engine.

4) Tighten the flange hex bolts.
5) Mount the fixing clips.

8. Connect the throttle (inlet pipe) and the intake stake.

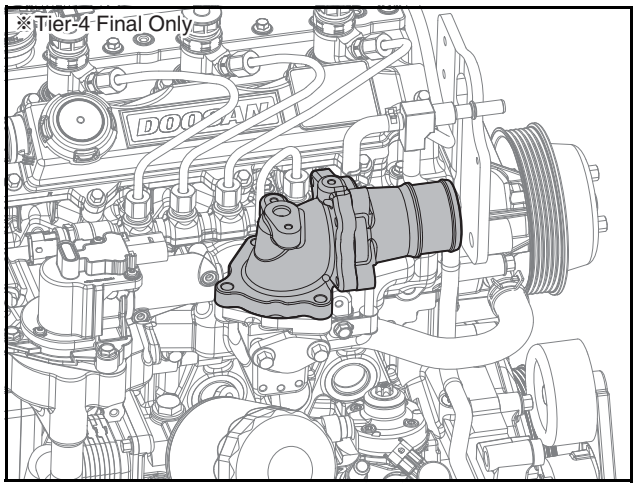

ED18190180

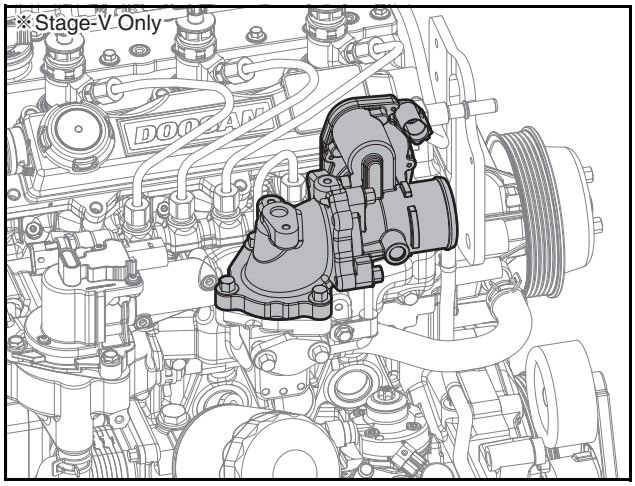

ED18190051

1) Mount the intake stake and the gasket to the intake manifold.
2) Tighten 3 hex bolts at a tightening torque of 2.2 kgf·m.
3) Connect the throttle (inlet pipe) and the gaskets to the intake stake.
4) Tighten 3 hex bolts at a tightening torque of 2.2 kgf·m.

⚠ CAUTION

- **Be careful to note the direction when mounting the gasket.**
- **Be careful not to damage the gasket while mounting it.**

9. Connect the breather hose.

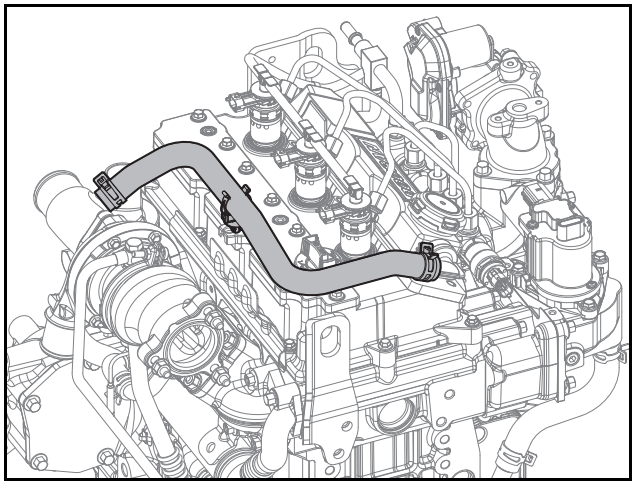

ED18190050

1) Connect the breather hose.
2) Mount the hose clamps.

⚠ CAUTION

Do not reuse the clamp if it has permanent deformation by irregular shape.

Idle gear

Disassembly of Idle Gear

1. Remove the V-belt.

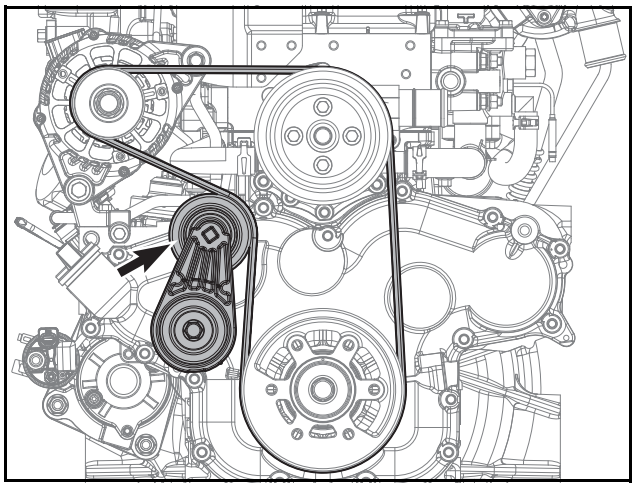

ED18190044

1) Turn the auto tensioner counterclockwise by using a quadrangular groove at the top of the auto tensioner pulley (Use a 10 mm x 10 mm quadrangular tool).
2) Remove the belt wound around the auto tensioner pulley by using a space generated by the rotation of the auto tensioner.

2. Remove the crankshaft pulley.

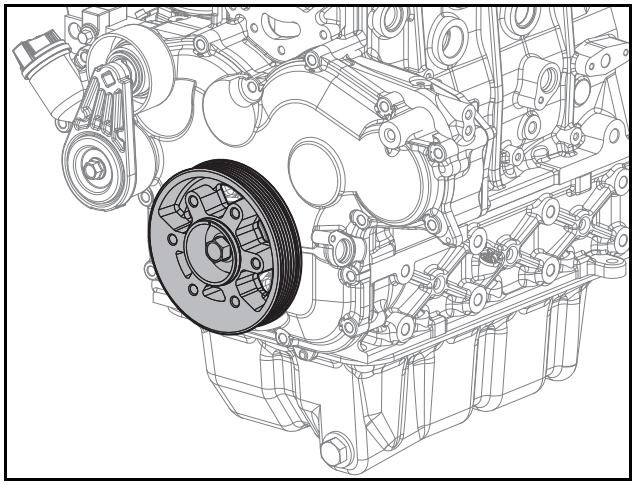

ED1819074

1) Loosen the flange hex bolt.
2) Remove the crankshaft pulley.

⚠ CAUTION

Be careful not to damage the oil seal.

3. Remove the timing gear case.

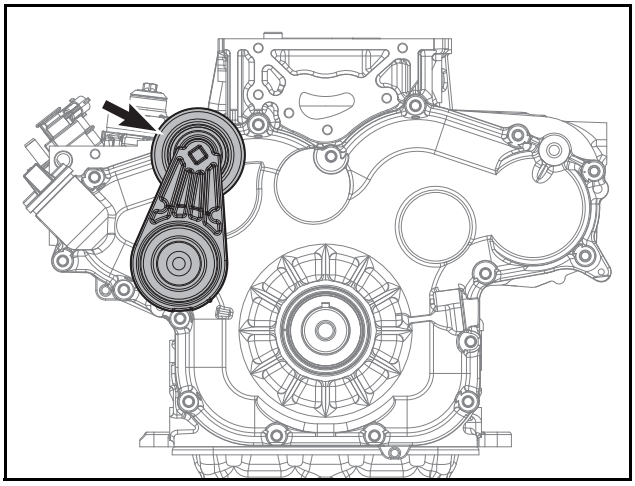

ED24190138

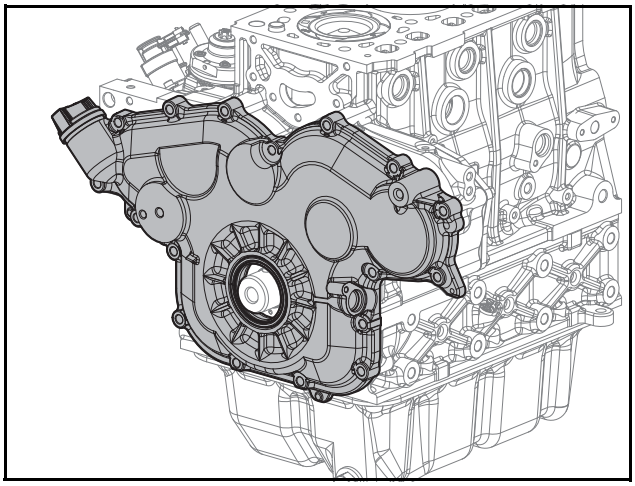

ED1819076

1) Loosen the flange hex bolt and remove the auto tensioner.
2) Loosen the fixing bolt and remove the crank speed sensor.
3) Loosen 16 hex bolts.
4) Remove the timing gear case.

⚠ CAUTION

Do not reuse the oil seal; replace them with new ones.

4. Remove the timing wheel.

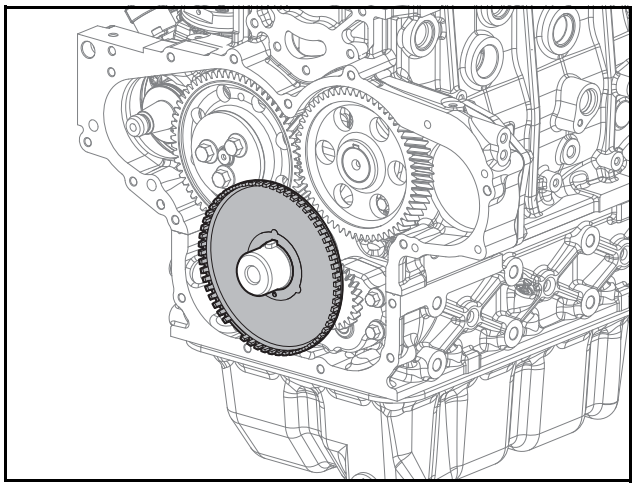

ED1819077

1) Remove the timing wheel.

5. Remove the idle gear.

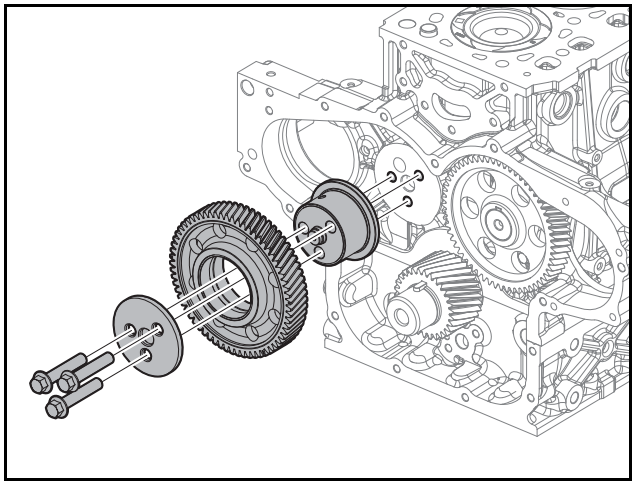

EDM01200076

1) Loosen 3 flange hex bolts.
2) Remove the idle gear shaft.
3) Remove the idle gear.

Assembly of Idle Gear

1. Attach the idle gear.

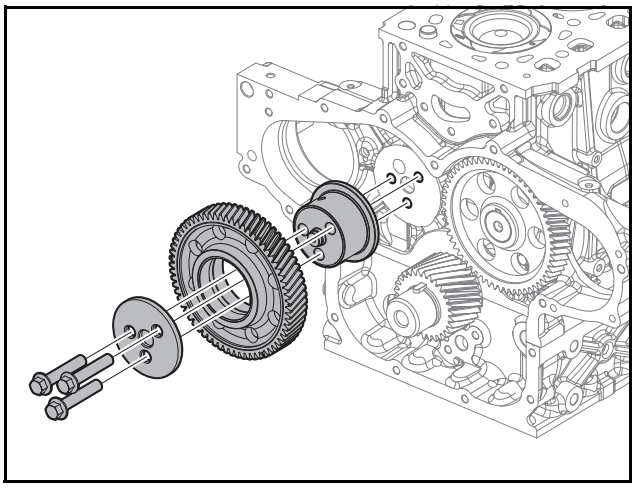

EDM01200076

1) Apply engine oil to the inside of the idle gear bush in the idle gear.
2) Attach the idle gear.

⚠ CAUTION

Make sure that you are attaching the idle gear so that its engraving faces the outside of the cylinder block.

3) Position the idle gear engraving between the camshaft gear engravings.

Note) You can see two camshaft gear engravings and one idle gear engraving.

⚠ CAUTION

Make sure that the idle gear engraving is positioned between the two camshaft gear engravings.

4) Position the crankshaft gear engraving mark between the idle gear engravings.

Note) You can see one crankshaft gear engraving and two idle gear engravings.

⚠ CAUTION

Make sure that the crankshaft gear engraving is positioned between two idle gear engravings.

5) Align the flange hex holes of the cylinder block to those of the idle gear shaft.

6) Attach the idle gear shaft.

⚠ CAUTION

Make the oil hole of the idle gear shaft face the top surface of the cylinder block.

7) Tighten 3 flange hex bolts at a tightening torque of 4.4 kgf·m.
8) Backlash of the idle gear and the crankshaft gear is 0.087 ~ 0.200 mm.

Item	Specified Value
Backlash between the idle gear and the crankshaft gear	0.087 ~ 0.200 mm

9) The backlash between the idle gear and the camshaft gear is 0.087 ~ 0.211 mm.

Item	Specified Value
Backlash between the idle gear and the camshaft gear	0.087 ~ 0.211 mm

2. Attach the timing wheel.

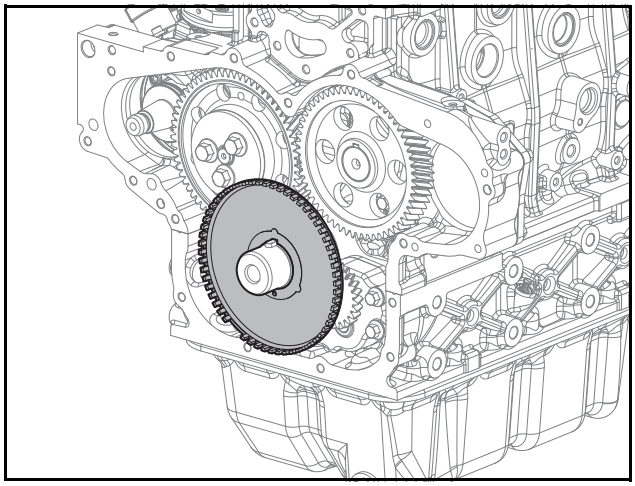

ED1819077

1) Align the timing wheel to the pin and attach it to the crankshaft gear surface.

⚠ CAUTION

Be careful not to damage the teeth of the timing wheel.

3. Attach the timing gear case.

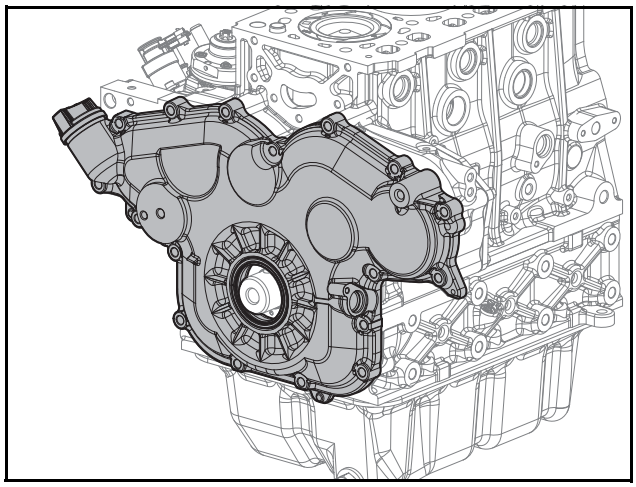

ED1819076

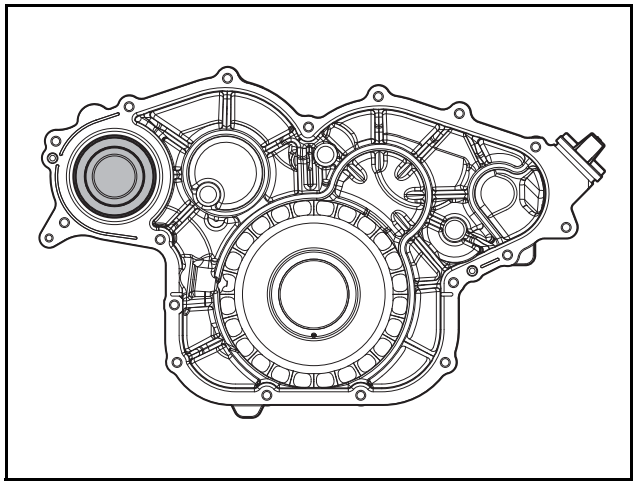

EDM02200047

Note) Apply as follows and use TB1217H equivalent product.

Note) Apply to the surface of TGC cover with ø2.5 ±0.5 mm thickness.

Note) The PTO bearing is included in the timing gear case. Hence, in the event of a bearing defect, replace the entire TGCC (Timing Gear Case Cover) assembly.

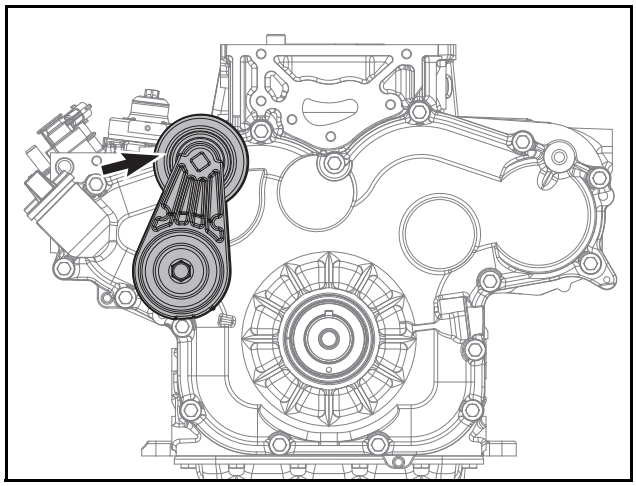

ED24190138

1) Make the assembly surface of the timing gear case face the ground.
2) Mount the front oil seal to the front oil seal assembly jig.
3) Align the front oil seal assembly jig where the front oil seal is mounted to the timing gear case and beat it with a rubber hammer.
4) when the front oil seal is inserted to the timing gear case, pull off the front oil seal assembly jig.

⚠ CAUTION

- **Be careful in noting the direction of the oil seal assembly and ensuring that the oil seal surface fasces the outside of the engine.**
- **Be careful of the depth of the oil seal when attaching it.**
- **Be careful not to damage the oil seal.**
- **Attach the oil seal without applying lubrication. coolant, fuel, sealant (TB1217H), or silicon.**
- **Remove foreign substances such as residues from the oil seal assembly bore.**
- **Do not reuse the oil seal; replace it with a new one.**
- **Be careful not to damage the oil seal when attaching it.**

5) Remove the foreign substances on the timing gear case assembly surface and clean it with a dry cloth.
6) Apply sealant (TB1217H) to the timing gear case assembly surface with the diameter of Ø2.5 ±0.5 mm.

⚠ CAUTION

- **Be careful that the timing gear case has been attached in the right direction.**
- **Attach parts within five minutes of applying sealant (TB1217H) onto the parts.**
- **Do not start the engine or load pressure for 25 minutes after applying sealant (TB1217H) onto the parts**

7) Align the timing gear case with the pin and attach it.
8) Tighten 16 hex bolts at a tightening torque of 2.2 kgf·m.
9) Mount the crank speed sensor and then tighten the fixing bolt.

4. Attach the crankshaft pulley.

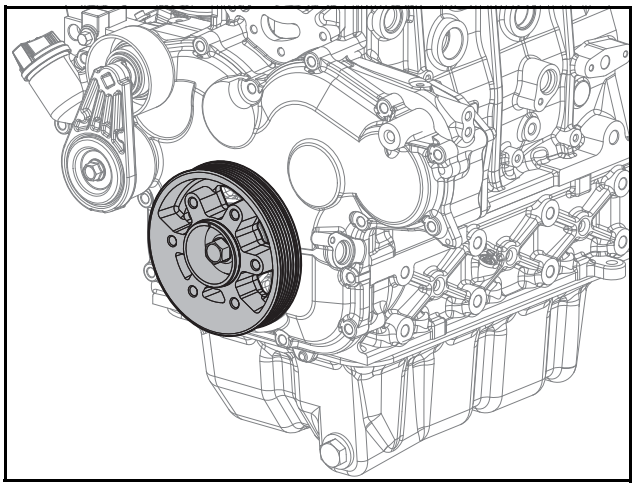

ED1819074

1) Align the crankshaft pulley to the pin and attach it.
2) Tighten flange hex bolts at a tightening torque of 26 kgf·m.

⚠ CAUTION

- **Be careful not to damage the oil seal.**
- **Fix the crankshaft to allow the flange hex bolts to be tightened with the specified torque.**

5. Attach the V-belt.

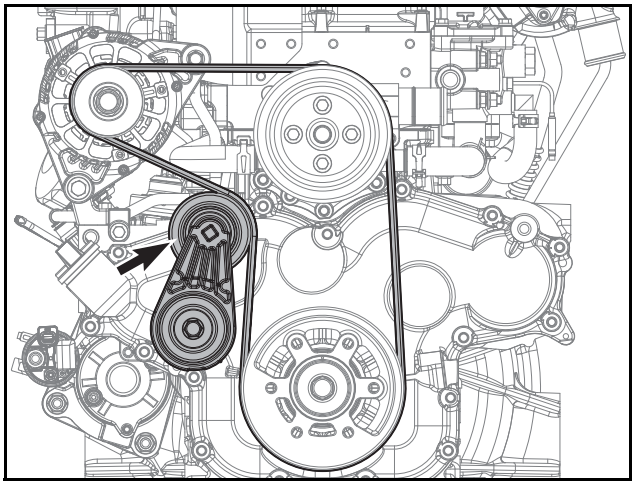

ED18190044

1) Wind a new belt around all pulleys except for the auto tensioner.
2) Turn the auto tensioner counterclockwise by using a quadrangular groove at the top of the auto tensioner pulley (Use a 10 mm x 10 mm quadrangular tool).

3) Wind the belt around the auto tensioner pulley by using a space generated by the rotation of the auto tensioner, and then naturally release the tensioner that has been pulled counterclockwise.

⚠ CAUTION

For checking and measuring the belt tension, refer to Belt Tension in Chapter 12 (Others/Driving Units).

Measurement of Outside Diameter of Idle Gear Shaft

1. Set the gauge.
2. Measure the outside diameter of the idle gear shaft.

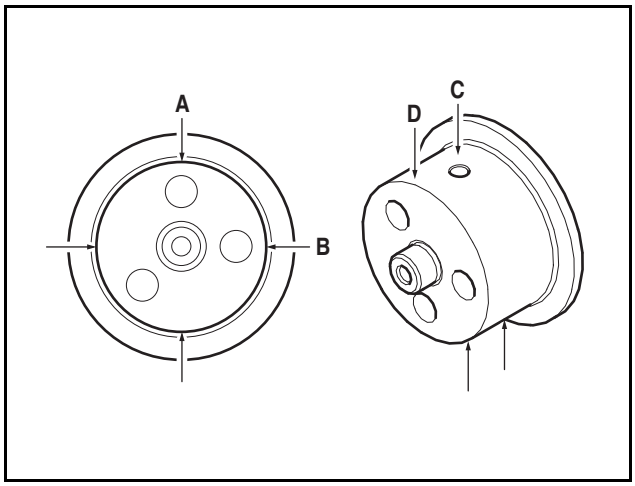

EDL022111

1) Measure total 4 points of the outside diameter of the idle gear shaft: vertical (A), horizontal (B), front (C), and rear (D).
2) The standard measurement value of the outside diameter of the idle gear shaft is within the range of 59.921 ~ 59.940 mm.

Item	Specified Value
Outside diameter of the idle gear shaft	59.921 ~ 59.940 mm

Measurement of Inside Diameter of Idle Gear

1. Set the gauge.
2. Measure the inside diameter of the idle gear.

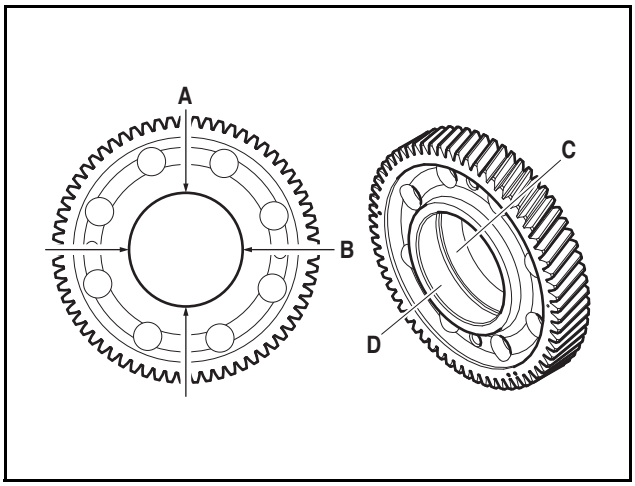

EDL022112A

1) Measure total 4 points of the inside diameter of the idle gear: vertical (A), horizontal (B), front (C), and rear (D).
2) The standard measurement value of the inside diameter of the idle gear is within the range of 59.97 ~ 60 mm.

Item	Specified Value
Inside diameter of the idle gear	59.97 ~ 60 mm

Lifting hook

Disassembly of Lifting Hook

1. Remove the V-belt.

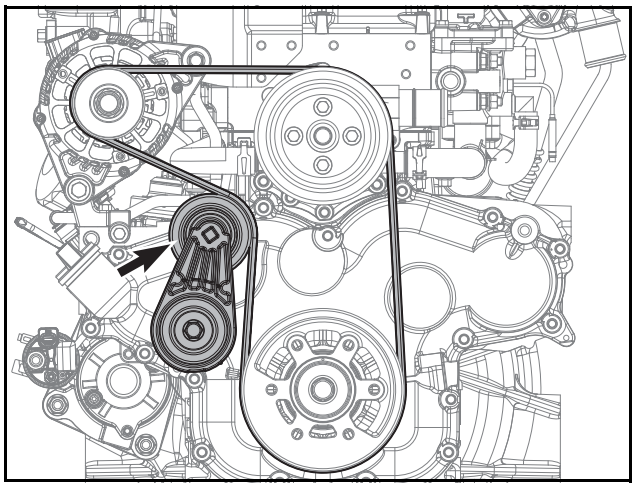

ED18190044

1) Turn the auto tensioner counterclockwise by using a quadrangular groove at the top of the auto tensioner pulley (Use a 10 mm x 10 mm quadrangular tool).
2) Remove the belt wound around the auto tensioner pulley by using a space generated by the rotation of the auto tensioner.

2. Detach the alternator.

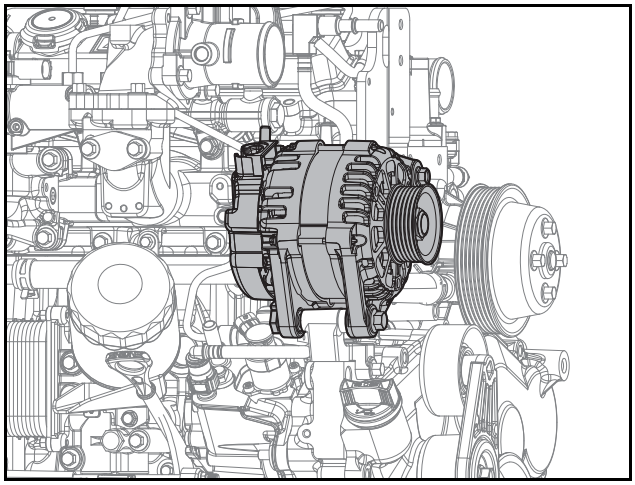

ED18190045

1) Loosen the upper/lower bolt and remove the alternator.
2) When loosing bolt, take care not to lose nut.

3. Remove the coolant pump pulley.

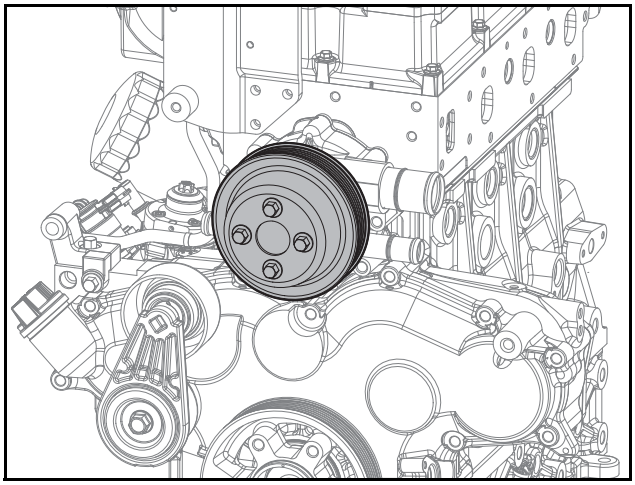

ED18190056

1) Loosen 4 hex bolts.
2) Remove the coolant pump pulley.

4. Remove the coolant pump.

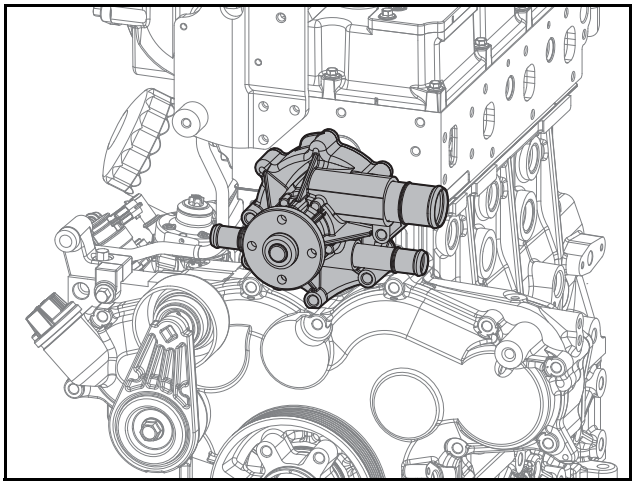

ED18190057

1) Loosen 4 hex bolt and 2 flange hex nut.
2) Remove the coolant pump and the gasket.

5. Remove the lifting hooks.

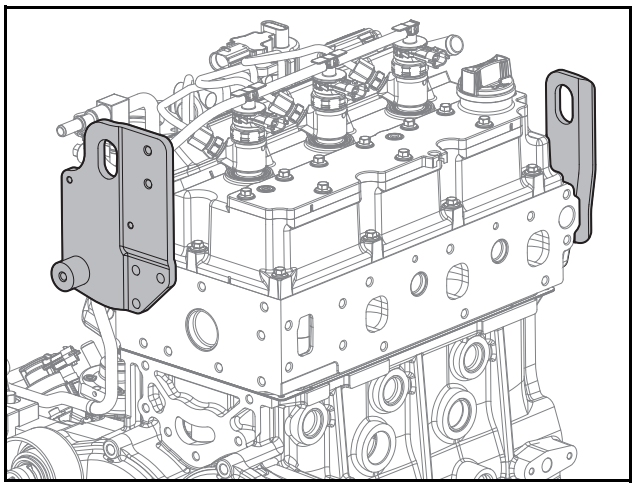

ED18190058

1) Loosen flange bolt.
2) Remove the lifting hooks.

Assembly of Lifting Hook

1. Mount the rear and front lifting hooks.

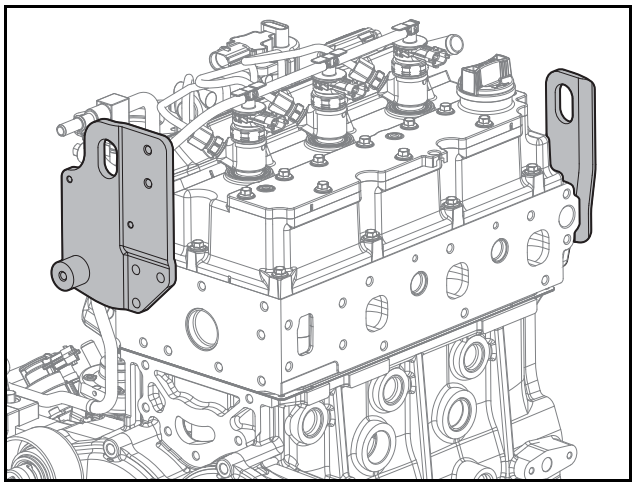

ED18190058

1) Mount the rear lifting hook.
2) Tighten 2 flange hex bolts at a tightening torque of 4.4 kgf·m.
3) Mount the front lifting hook.
4) Tighter 3 flange hex bolt at a tightening torque of 2.2 kgf·m.

2. Attach the water pump.

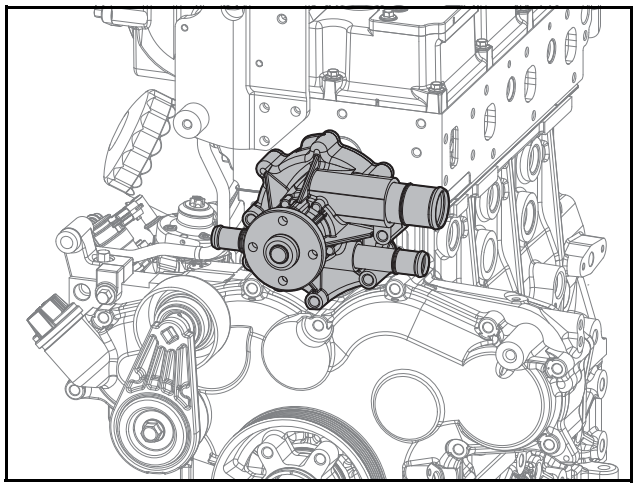

ED18190057

1) Align the gasket with the stud bolts and mount it.
2) Align the coolant pump with the stud bolts and attach it.
3) Tighten 4 hex bolts and 2 flange hex nuts at a tightening torque of 2.2 kgf·m.

⚠ CAUTION

- **Do not allow the gasket to protrude from or be to one side of the coolant pump.**
- **Be careful not to damage the gasket while mounting it.**

3. Attach the water pump pulley.

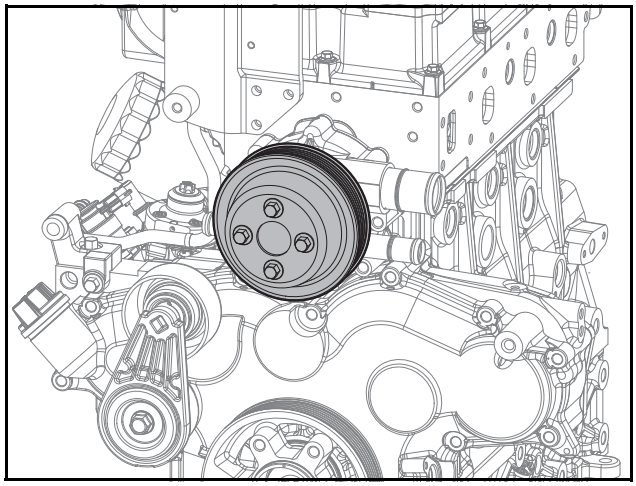

ED18190056

1) Attach the water pump pulley.
2) Tighten 4 hex bolts at a tightening torque of 2.2 kgf·m.

4. Attach the alternator.

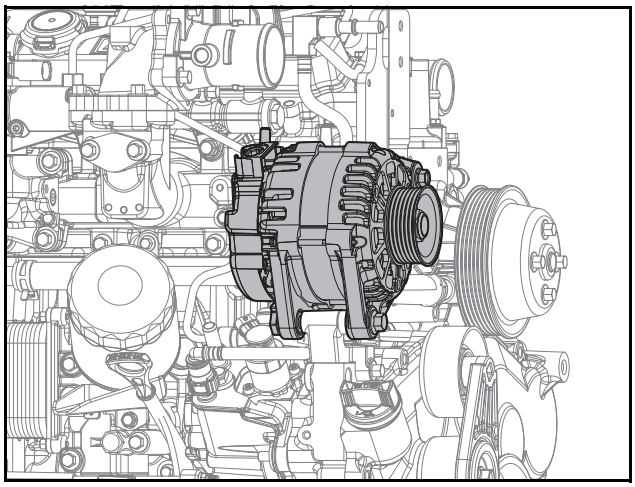

ED18190045

1) Using bolt B and nut, attach the alternator temporarily.
2) By tightening bolt, set the position of the alternator properly.
3) Tighten upper bolt to a torque of 2.2 ±0.2 kgf·m.
4) Tighten lower bolt to a torque of 6.2 ±0.6 kgf·m.
5. Attach the V-belt.

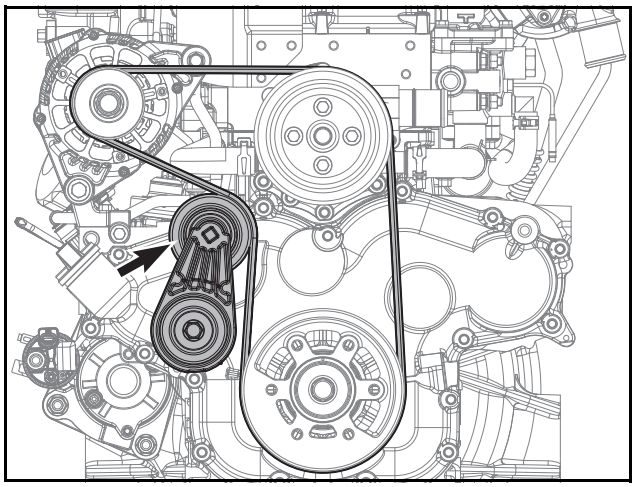

ED18190044

1) Wind a new belt around all pulleys except for the auto tensioner.
2) Turn the auto tensioner counterclockwise by using a quadrangular groove at the top of the auto tensioner pulley (Use a 10 mm x 10 mm quadrangular tool).
3) Wind the belt around the auto tensioner pulley by using a space generated by the rotation of the auto tensioner, and then naturally release the tensioner that has been pulled counterclockwise.

⚠ CAUTION

For checking and measuring the belt tension, refer to Belt Tension in Chapter 12 (Others/Driving Units).

11. Electric system

Electric parts 237
Electric Parts 237
Circuit diagram 238
General Information 238
Engine Connector 239
Engine Connector of Engine Control Unit (ECU) 241
Switches and sensors 243
Injector#1 243
Injector#2 243
Injector#3 243
Coolant Temperature Sensor (COOLANT_TEMP) 243
Exhaust Gas Recirculation Valve Position Sensor (EGR) 244
Crank Shaft Position Sensor (CRANK) 244
CAM Shaft Position Sensor (CAM) 244
Temperature Manifold Absolute Pressure Sensor (TMAP) 245
Oil Pressure Sensor (OIL PRES) 245
Rail Pressure Sensor (RPS) 245
Feul Metering Unit (METERING UNIT) 246
Oil Level Sensor (OIL LEVEL) 246
Throttle Valve Actuator/Position Sensor 246
Exhaust Gas Temperature Sensor (EGT) 247
Wire harness 248
Disassembly of Wire Harness 248
Assembly of Wire Harness 248
Electronic control unit (ECU) 249
General Information 249
Electronic Control Unit (ECU) Connectors 249
I/O of Electronic Control Unit (ECU) 250
Operational Conditions of Electronic Control Unit (ECU) 251
Starter 252
General Information 252
Wiring Diagram 252
Disassembly of Starter 253
Assembly of Starter 253
Alternator 254
General Information 254
Wiring Diagram 255

Disassembly of Alternator 255
Assembly of Alternator 255

Electric parts

Electric Parts

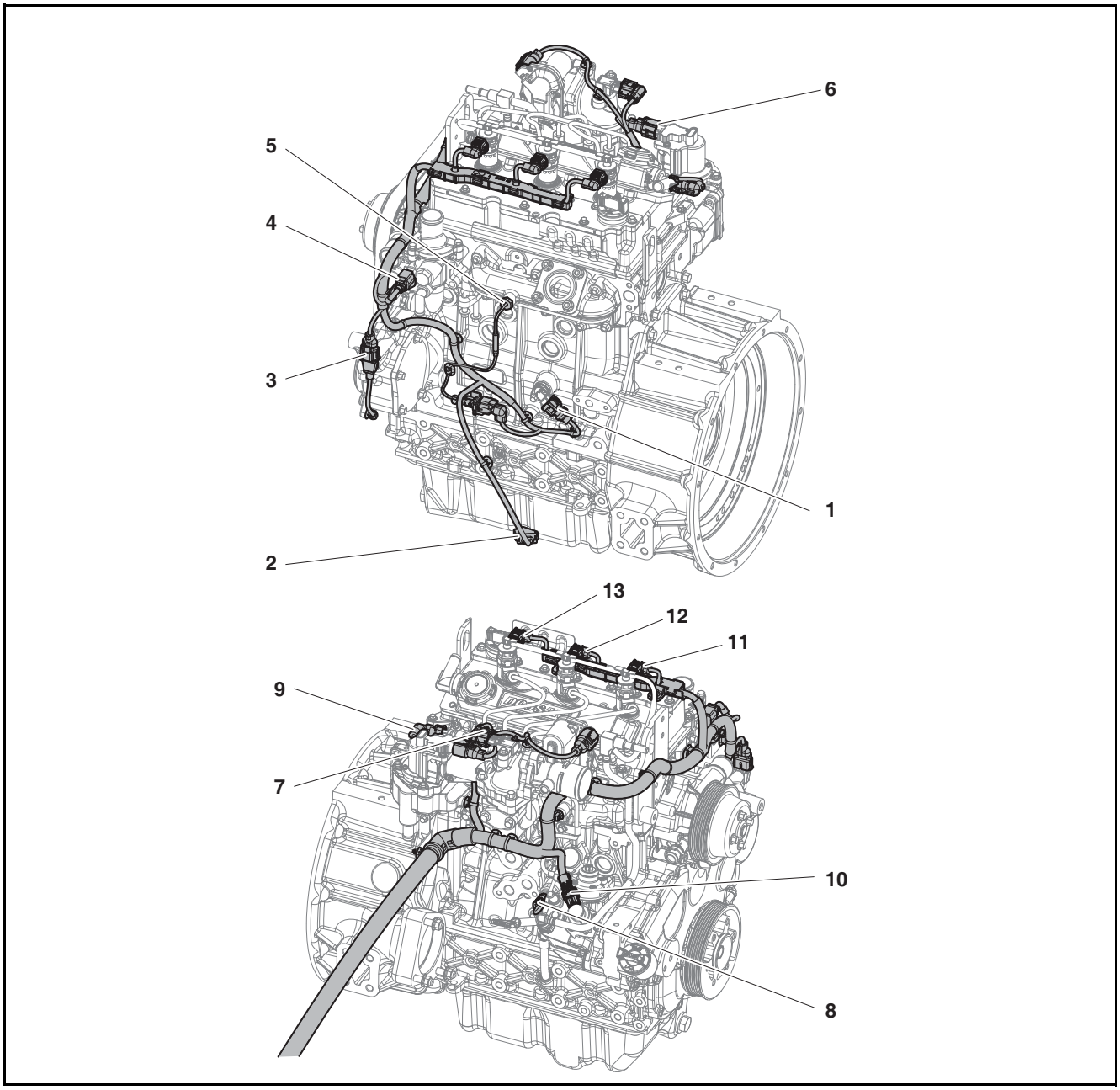

EDM01200077

1. CAM: CAM Shaft Position Sensor
2. OLS: Oil Level Sensor
3. CRK: Crank Shaft Position Sensor
4. WTS: Water Temperature Sensor
5. EGT: Exhaust Gas Temperature Sensor
6. EGR: Exhaust Gas Recirculation Valve Position Sensor
7. T-MAP Sensor
8. OPS: Oil Pressure Sensor
9. RPS: Rail Pressure Sensor
10. IMV: Inlet Metering Valve
11. INJ: Injector #1
12. INJ: Injector #2
13. INJ: Injector #3

* EGT Sensor: Stage-V only, Oil Level Sensor: Option

Circuit diagram

General Information

1. Circuit diagrams allow you to check the circuit number of the connector connected to the engine connector of the engine control unit (ECU).

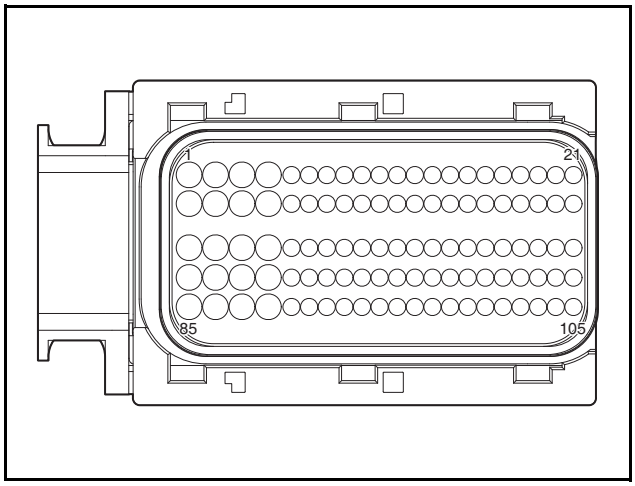

EDM03190313

2. The wire colors are as follows.
1) W: White
2) Y: Yellow
3) L: Blue
4) O: Orange
5) P: Purple
6) B: Black
7) RW: Red & White
8) BR: Brown
9) GR: Gray

3. The wire types are as follows.
1) FLR91X-A
2) FLR91X-A_T01 (Twist)
3) FLR91X-A_T02 (Twist)
4) FLR91X-A_T03 (Twist)
5) FLR91X-A_T04 (Twist)
6) FLR91X-A_T05 (Twist)
7) FLR91X-A_T06 (Twist)
8) FLR91X-A_T07 (Twist)
9) FLR91X-A_BS01 (Shield)

4. ECU PIN No. is the pin number of the engine connector.

5. Sensor PIN No. is the pin number of the sensor connector.

Engine Connector

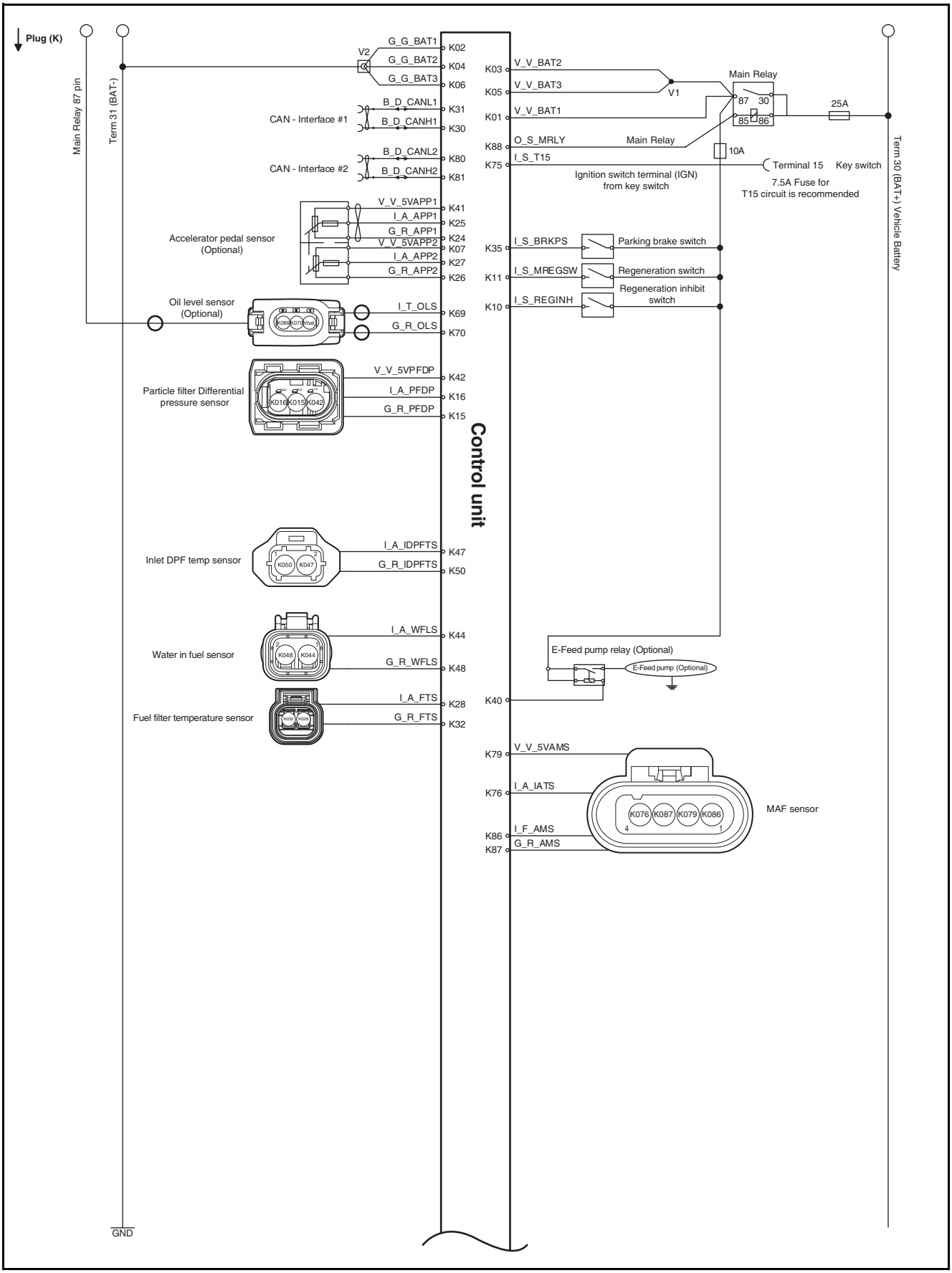

EDM01200109

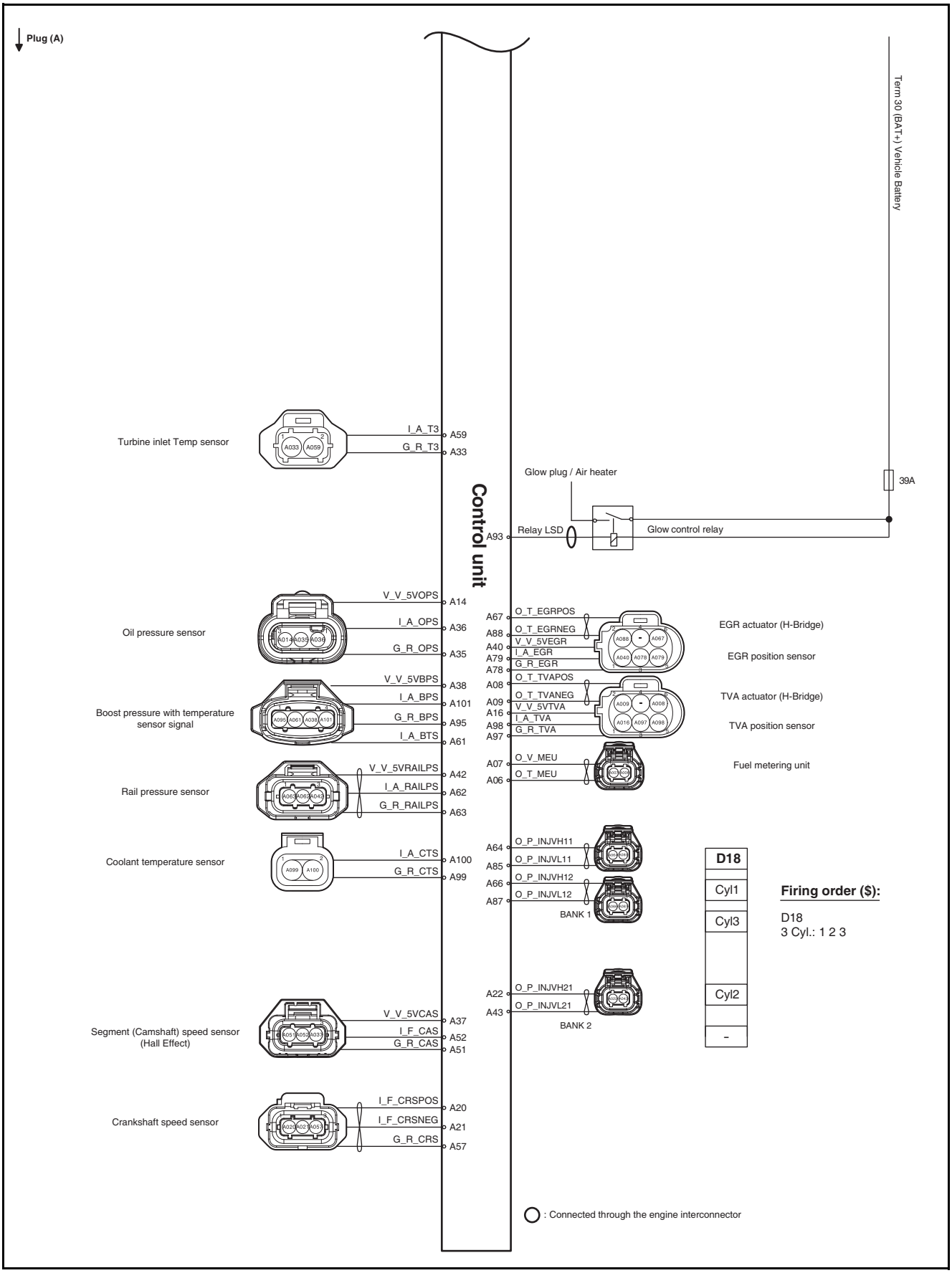

EDM01200110

Engine Connector of Engine Control Unit (ECU)

Circuit No.	SQ	Color	Type	Description	To		From		Remarks
A063	0.75	B	FLR91X-A_T01	Rail pressure sensor ground	ECU	63	RPS	1	
A062	0.75	Brn	FLR91X-A_T01	Rail pressure sensor signal	ECU	62	RPS	2	
A042	0.75	R	FLR91X-A_T01	Rail pressure sensor supply	ECU	42	RPS	3	
A040	0.75	R	FLR91X-A	EGR position sensor supply	ECU	40	EGR	1	
A088	1	G	FLR91X-A_T02	EGR motor minus	ECU	88	EGR	2	
A078	0.75	B	FLR91X-A	EGR position sensor ground	ECU	78	EGR	3	
A079	0.75	W	FLR91X-A	EGR position sensor signal	ECU	79	EGR	5	
A067	1	L	FLR91X-A_T02	EGR motor plus	ECU	67	EGR	6	
A016	0.75	R	FLR91X-A	Throttle position sensor supply	ECU	16	TROTTLE	1	Stage-V only
A009	0.75	LW	FLR91X-A_T03	Throttle plate actuator motor minus	ECU	9	TROTTLE	2	Stage-V only
A097	0.75	B	FLR91X-A	Throttle plate actuator feedback ground	ECU	97	TROTTLE	3	Stage-V only
A098	0.75	P	FLR91X-A	Throttle plate actuator feedback signal	ECU	98	TROTTLE	5	Stage-V only
A008	0.75	R	FLR91X-A_T03	Throttle plate actuator motor plus	ECU	8	TROTTLE	6	Stage-V only
A099	0.75	RG	FLR91X-A	Coolant temperature sensor ground	ECU	99	COOLANT TEMP	1	
A100	0.75	RW	FLR91X-A	Coolant temperature sensor signal	ECU	100	COOLANT TEMP	2	
A007	0.75	VL	FLR91X-A_T04	Fuel metering unit supply (BAT+)	ECU	7	METERING UNIT	1	
A006	0.75	W	FLR91X-A_T04	Fuel metering unit	ECU	6	METERING UNIT	2	
A020	0.75	O	FLR91X-A_BS01	Crankshaft speed sensor signal plus	ECU	20	CRANK	1	
A021	0.75	P	FLR91X-A_BS01	Crankshaft speed sensor signal minus	ECU	21	CRANK	2	
A057	0.75	B	FLR91X-A	Crankshaft sensor ground	ECU	57	CRANK	3	
A051	0.75	B	FLR91X-A	Camshaft speed sensor ground	ECU	51	CAM	1	
A052	0.75	Brn	FLR91X-A	Camshaft speed sensor signal	ECU	52	CAM	2	
A037	0.75	R	FLR91X-A	Camshaft speed sensor supply	ECU	37	CAM	3	
A095	0.75	B	FLR91X-A	TMAP sensor ground	ECU	95	TMAP	1	
A061	0.75	G	FLR91X-A	TMAP sensor signal (Temp)	ECU	61	TMAP	2	
A038	0.75	R	FLR91X-A	TMAP sensor supply	ECU	38	TMAP	3	
A101	0.75	GrL	FLR91X-A	TMAP sensor signal (PRES)	ECU	101	TMAP	4	
A014	0.75	R	FLR91X-A	Oil pressure sensor supply	ECU	14	OIL PRES	3	

Circuit No.	SQ	Color	Type	Description	To		From		Remarks
A035	0.75	B	FLR91X-A	Oil pressure sensor ground	ECU	35	OIL PRES	2	
A036	0.75	O	FLR91X-A	Oil pressure sensor input signal	ECU	36	OIL PRES	1	
A064	1.5	B	FLR91X-A_T05	Injector 1 "high"	ECU	64	INJECTOR#1	1	
A085	1.5	RW	FLR91X-A_T05	Injector 1 "low"	ECU	85	INJECTOR#1	2	
A022	1.5	RG	FLR91X-A_T06	Injector 2 "high"	ECU	22	INJECTOR#2	1	
A043	1.5	RV	FLR91X-A_T06	Injector 2 "low"	ECU	43	INJECTOR#2	2	
A066	1.5	RY	FLR91X-A_T07	Injector 3 "high"	ECU	66	INJECTOR#3	1	
A087	1.5	B	FLR91X-A_T07	Injector 3 "low"	ECU	87	INJECTOR#3	2	
A093	0.75	Lgra	FLR91X-A	Glow plug relay	ECU	93	INTER	2	
A033	0.75	O	FLR91X-A	Exhaust gas temperature sensor ground	ECU	33	EGT	1	Stage-V only
A059	0.75	P	FLR91X-A	Exhaust gas temperature sensor signal	ECU	59	EGT	2	Stage-V only
S87	0.75	R	FLR91X-A	Oil level sensor supply	OIL_LEVEL	1	INTER	1	Option
K070	0.75	B	FLR91X-A	Oil level sensor ground	OIL_LEVEL	2	INTER	3	Option
K069	0.75	G	FLR91X-A	Oil level sensor input signal	OIL_LEVEL	3	INTER	4	Option

Switches and sensors

Injector#1

A part that injects fuel according to the injection signal received from the ECU.

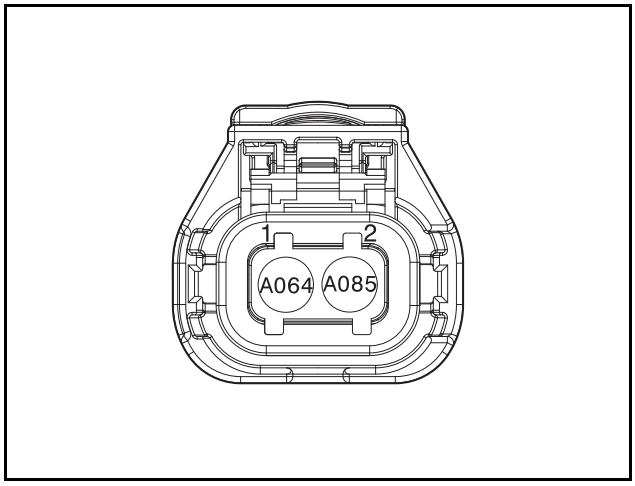

ED24190081

No	ECU PIN	Description
1	64	Injector 1 "High"
2	85	Injector 1 "Low"

Injector#2

A part that injects fuel according to the injection signal received from the ECU.

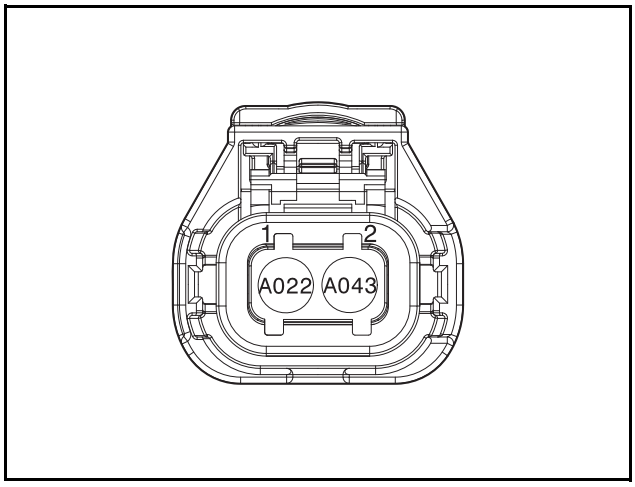

ED24190083

No	ECU PIN	Description
1	22	Injector 2 "High"
2	43	Injector 2 "Low"

Injector#3

A part that injects fuel according to the injection signal received from the ECU.

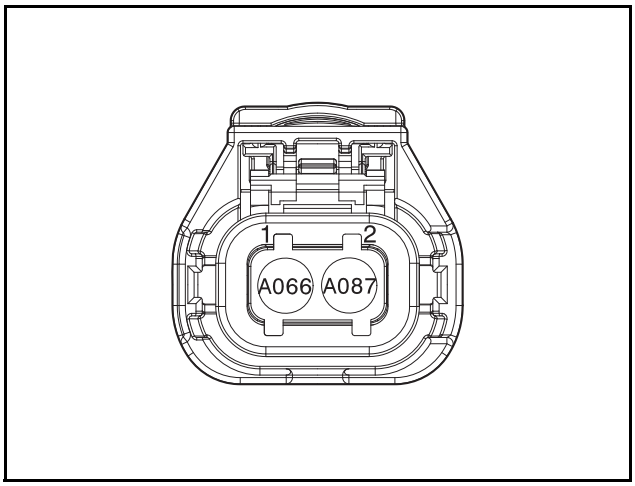

ED24190084

No	ECU PIN	Description
1	22	Injector 3 "High"
2	43	Injector 3 "Low"

Coolant Temperature Sensor (COOLANT_-TEMP)

A sensor that senses the temperature of engine cooling water.

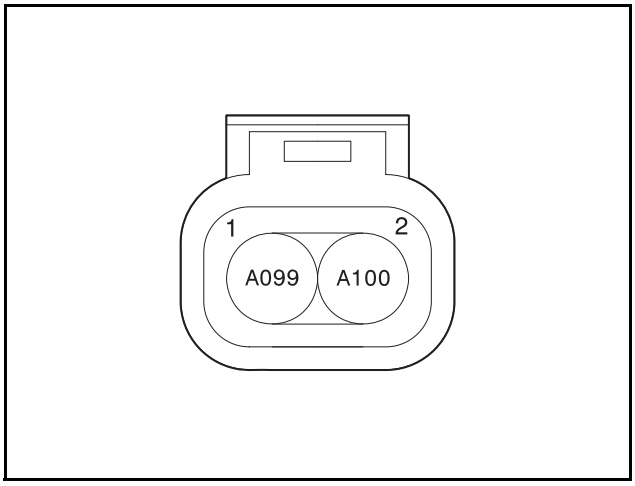

ED24190085

No	ECU PIN	Description
1	99	Coolant temperature sensor ground
2	100	Coolant temperature sensor signal

Exhaust Gas Recirculation Valve Position Sensor (EGR)

A sensor used to reduce nitrogen oxide (NOx) from the exhaust gas. It recirculates some of the exhaust gas from the engine to the intake side. In this way, the combustion temperature is reduced and the discharged NOx is reduced.

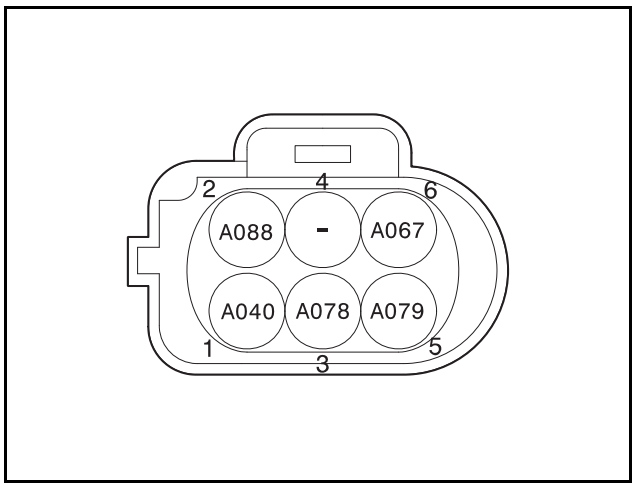

ED24190086

No	ECU PIN	Description
1	40	EGR position sensor supply
2	88	EGR motor minus
3	78	EGR position sensor ground
5	79	EGR position sensor signal
6	67	EGR motor plus

Crank Shaft Position Sensor (CRANK)

A sensor that senses the position of the crankshaft in order to sense the engine rotation speed and the position of the piston.

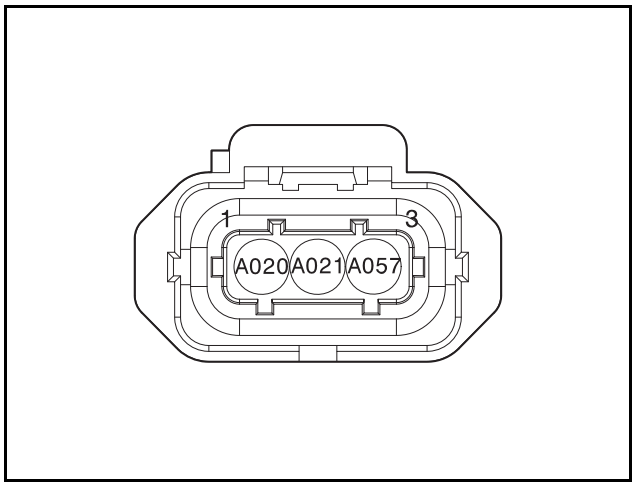

ED24190087

No	ECU PIN	Description
1	20	Crankshaft speed sensor signal plus
2	21	Crankshaft speed sensor signal minus
3	57	Crankshaft sensor ground

CAM Shaft Position Sensor (CAM)

A sensor that senses the position of the camshaft, allowing it to check the position of each piston by using the reference points with the same basis of the crank shaft position sensor which cannot check the position of each piston.

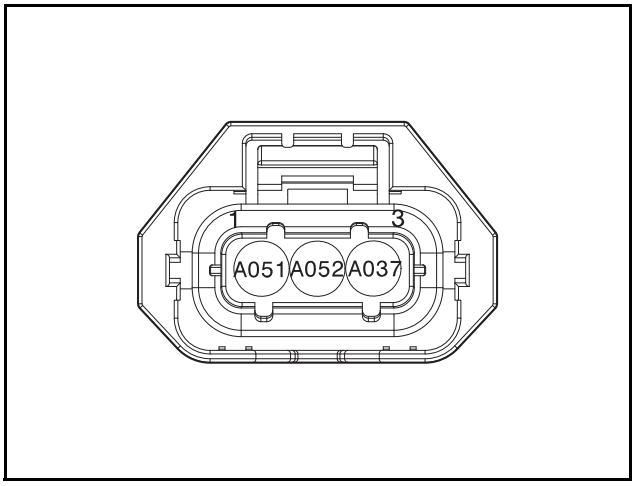

ED24190088

No	ECU PIN	Description
1	51	Camshaft speed sensor ground
2	52	Camshaft speed sensor signal
3	37	Camshaft speed sensor supply

Temperature Manifold Absolute Pressure Sensor (TMAP)

A sensor that measures the pressure and the temperature of air in the intake manifold.

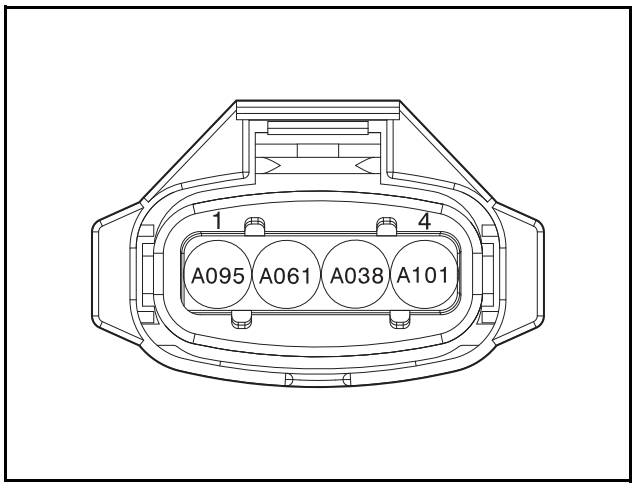

ED24190089

No	ECU PIN	Description
1	95	TMAP sensor ground
2	61	TMAP sensor signal (Temp)
3	38	TMAP sensor supply
4	101	TMAP sensor signal (PRES)

Oil Pressure Sensor (OIL PRES)

A sensor that measures the pressure of engine oil in the main gallery.

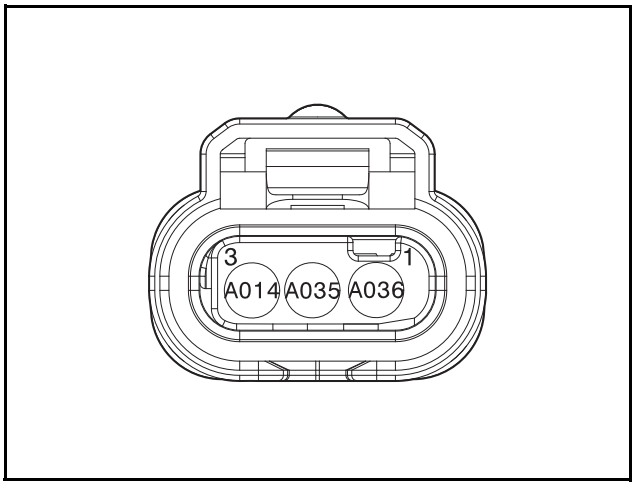

ED24190090

No	ECU PIN	Description
1	36	Oil pressure sensor input signal
2	35	Oil pressure sensor ground
3	14	Oil pressure sensor supply

Rail Pressure Sensor (RPS)

A sensor that is installed at the end of the common rail, measuring the instantaneous internal pressure of the common rail.

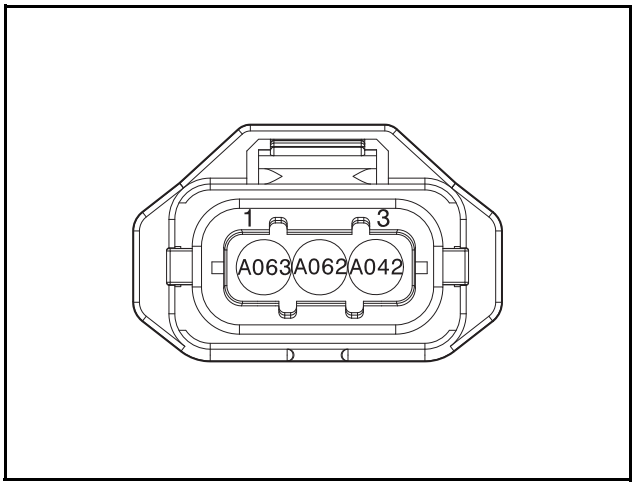

ED24190091

No	ECU PIN	Description
1	63	Rail pressure sensor ground
2	62	Rail pressure sensor signal
3	42	Rail pressure sensor supply

Feul Metering Unit (METERING UNIT)

A valve mounted on the high-pressure pump. It adjusts the fuel volume pumped from the pump to the rail to control the fuel pressure on the rail.

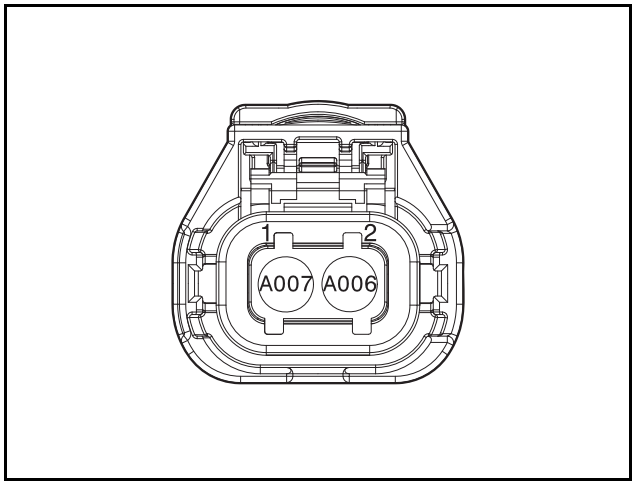

ED24190092

No	ECU PIN	Description
1	7	Fuel metering unit supply (BAT+)
2	6	Fuel metering unit

Oil Level Sensor (OIL LEVEL)

A sensor that measures the level of engine oil in the oil pan.

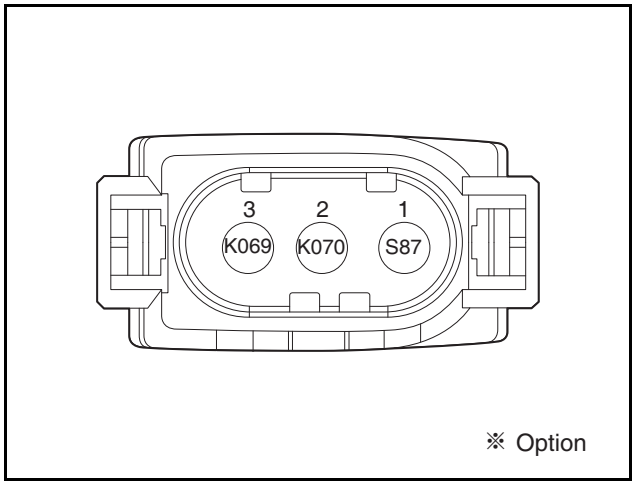

EDM01200128

No	ECU PIN	Description
1	Inter 1	Oil level sensor supply
2	Inter 2	Oil level sensor ground
3	Inter 3	Oil level sensor input signal

Throttle Valve Actuator/Position Sensor

Throttle Valve measures real value of valve angle for PID control by ECU.

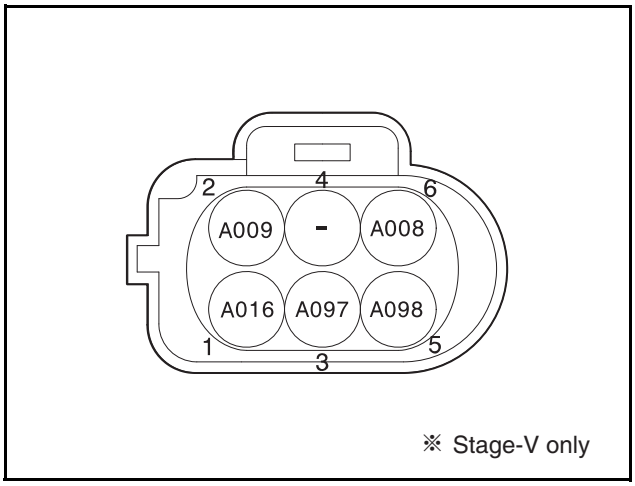

ED24190164

No	ECU PIN	Description
1	16	Throttle position sensor supply
2	9	Throttle plate actuator motor minus
3	97	Throttle plate actuator feedback ground
5	98	Throttle plate actuator feedback signal
6	8	Throttle plate actuator motor plus

Exhaust Gas Temperature Sensor (EGT)

A sensor that measures the temperature of exhaust gas in the exhaust manifold.

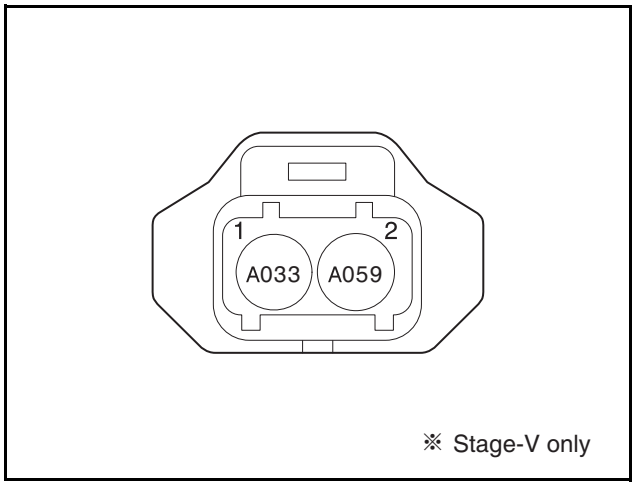

ED24190165

No	ECU PIN	Description
1	33	Exhaust gas temperature sensor ground
2	59	Exhaust gas temperature sensor signal

Wire harness

Disassembly of Wire Harness

1. Disconnect the connectors connected to each sensor.
2. Loosen the fixing bolts mounted on the wire harness bracket.
3. Remove the wire harness.

Assembly of Wire Harness

1. Mount the wire harness.
2. Tighten the fixing bolts mounted on the wire harness bracket.
3. Connect the connectors to each sensor.

Electronic control unit (ECU)

General Information

The engine control unit (ECU) controls fuel delivery.
The ECU is connected to various sensors. Based on the input values from the sensors, the ECU controls the engine for optimum operation.
Before disconnecting connectors from the ECU, disconnect the ground wire (negative (-) wire) of the battery cable. Do not dismantle the ECU.

Electronic Control Unit (ECU) Connectors

The ECU connectors are classified into the connectors connected to the vehicle and the connectors connected to the engine.

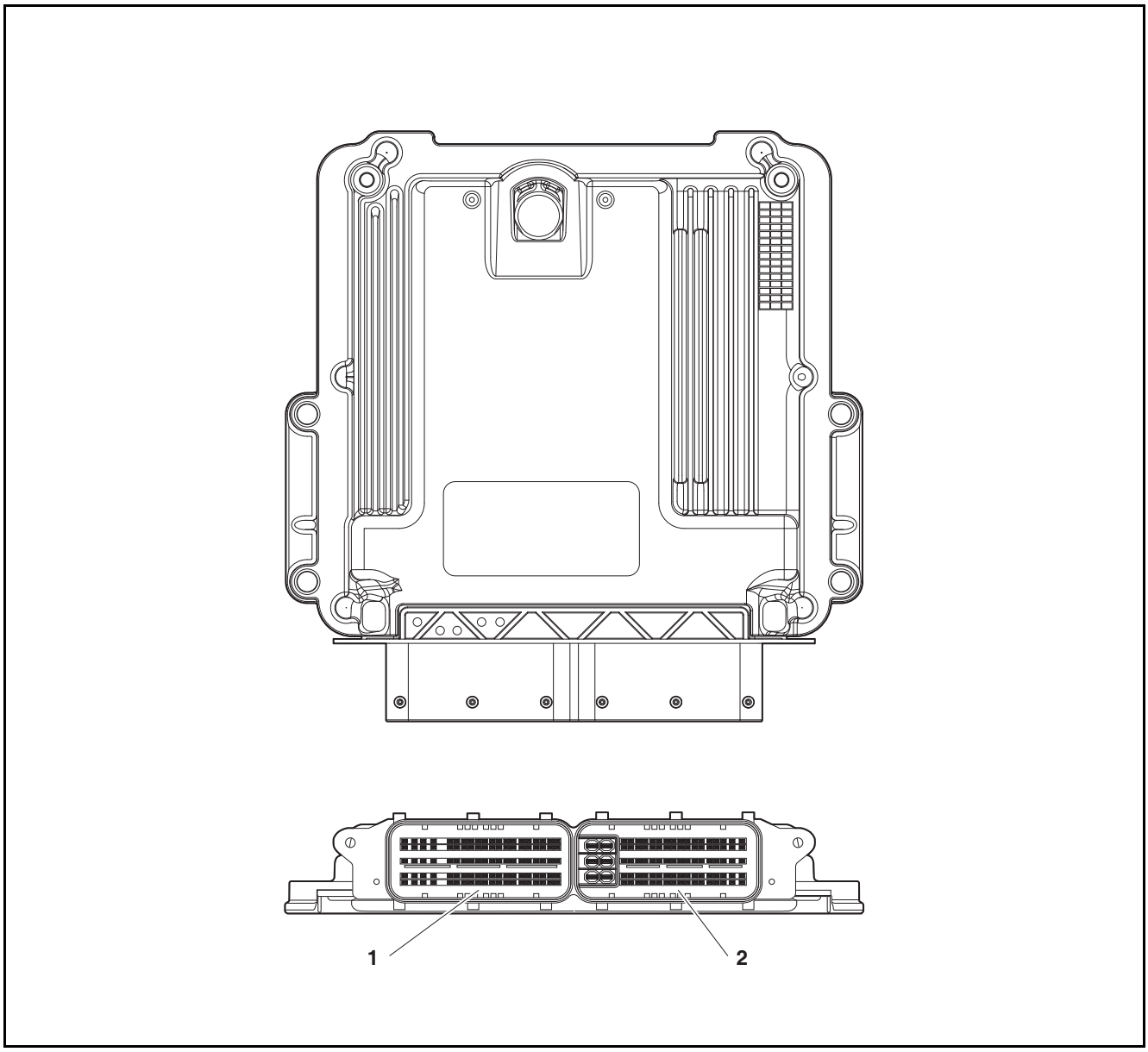

ED24190096

1. Connectors connected to the engine
2. Connectors connected to the vehicle

I/O of Electronic Control Unit (ECU)

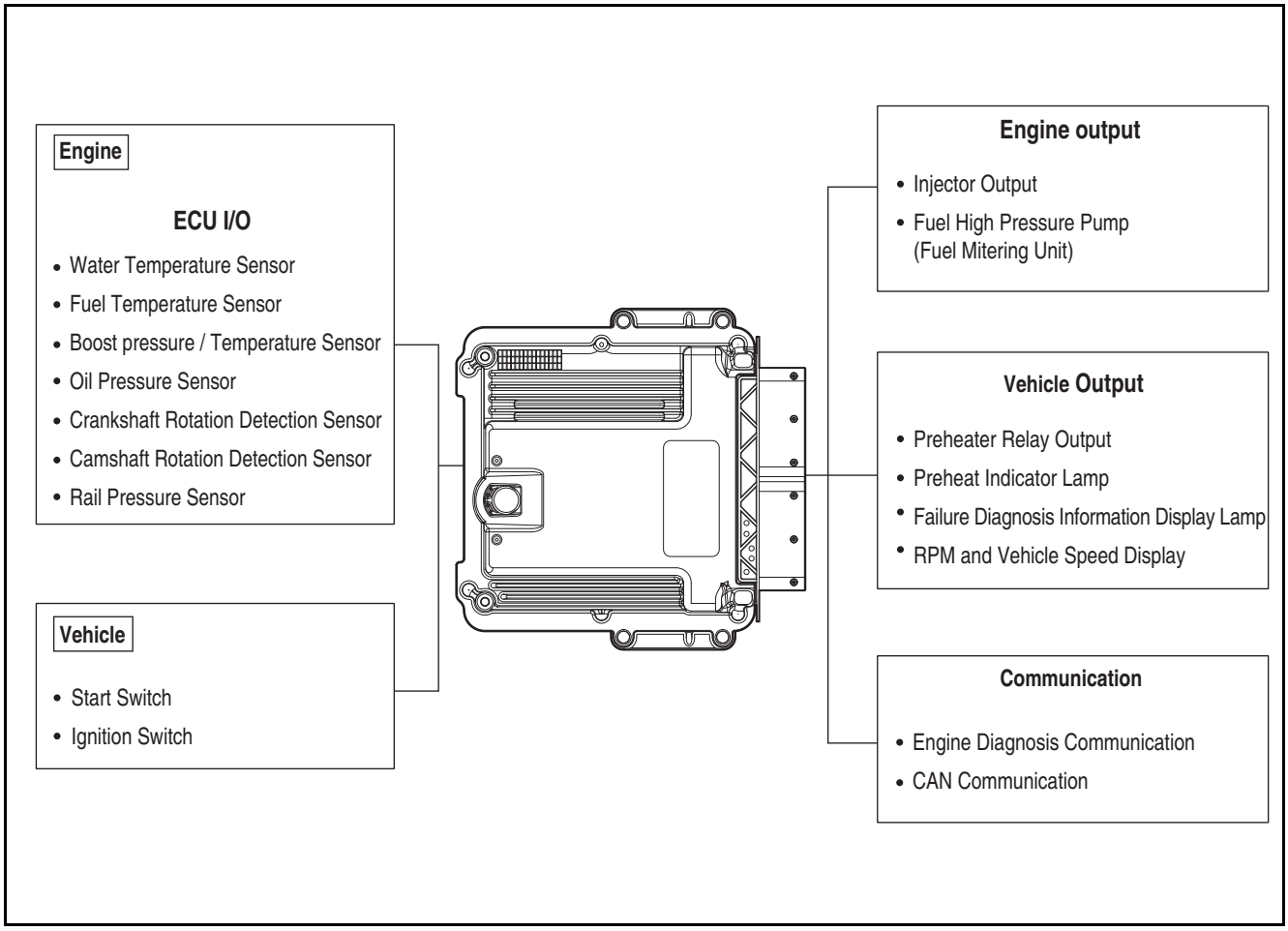

ED24190175

Operational Conditions of Electronic Control Unit (ECU)

1. Engine Start
1) Sets the reference temperature for determining preheat to the lowest temperature among coolant temperature, fuel temperature, intake air temperature, and oil temperature.
2) Sets the reference temperature for determining fuel volume by setting the engine cooling temperature.
3) Determines the appropriate fuel volume to start the engine, delivers the fuel to the engine, and measures the RPM signal by using the crankshaft rev-count sensor.
2. Vehicle driving
1) Calculates the required data for driving a vehicle, such as CAN data and the RPM transferred from the vehicle control unit.
3. Driver-requested Adjustment of RPM
1) Controls the RPM based on request from the driver and controls the engine based on the RPM requested by the vehicle control unit.
4. Limp Home
1) A function that allows drivers to drive their vehicle to the repair center safely with the minimum conditions for driving the vehicle when a fault code occurs.
2) Limp Home function is applied under the following conditions.
- Accelerator pedal has failed: Regardless of pressing the accelerator pedal, the vehicle is driven at a consistent RPM.
- Sensor has failed: When sensors have failed, the vehicle is driven with the consistent alternative values.
- Output is limited: According to the fault type, the fuel volume delivered to the engine is limited. The limit is classified into four levels. The fuel volume is limited according to the severity of the fault.
- Diagnosis Information Display Lamp: Provides information of fault state to drivers for safe driving.
5. Failure Diagnosis
1) When a fault occurs, the failure diagnosis information display lamp on the gauge board is turned on.
2) With the failure diagnosis information display lamp, drivers can see the fault code.

Note) It can be checked from the failure diagnosis information on the gauge board.

3) It can be diagnosed by connecting the diagnosis unit to the check connector at the back of the driver's seat.
6. Driving record
1) Writes the information related driving to the ECU.
2) The information on fuel consumption, engine use time, and ECU use time is written in the ECU.
3) The information can be monitored with the ECU diagnosis device.

Starter

General Information

The starter is mounted at the rear of the Drive Plate housing. When disassembling the engine, put the pinion gear and ring gear of the starter into fuel, brush them, and then apply grease to them in order to prevent rust.

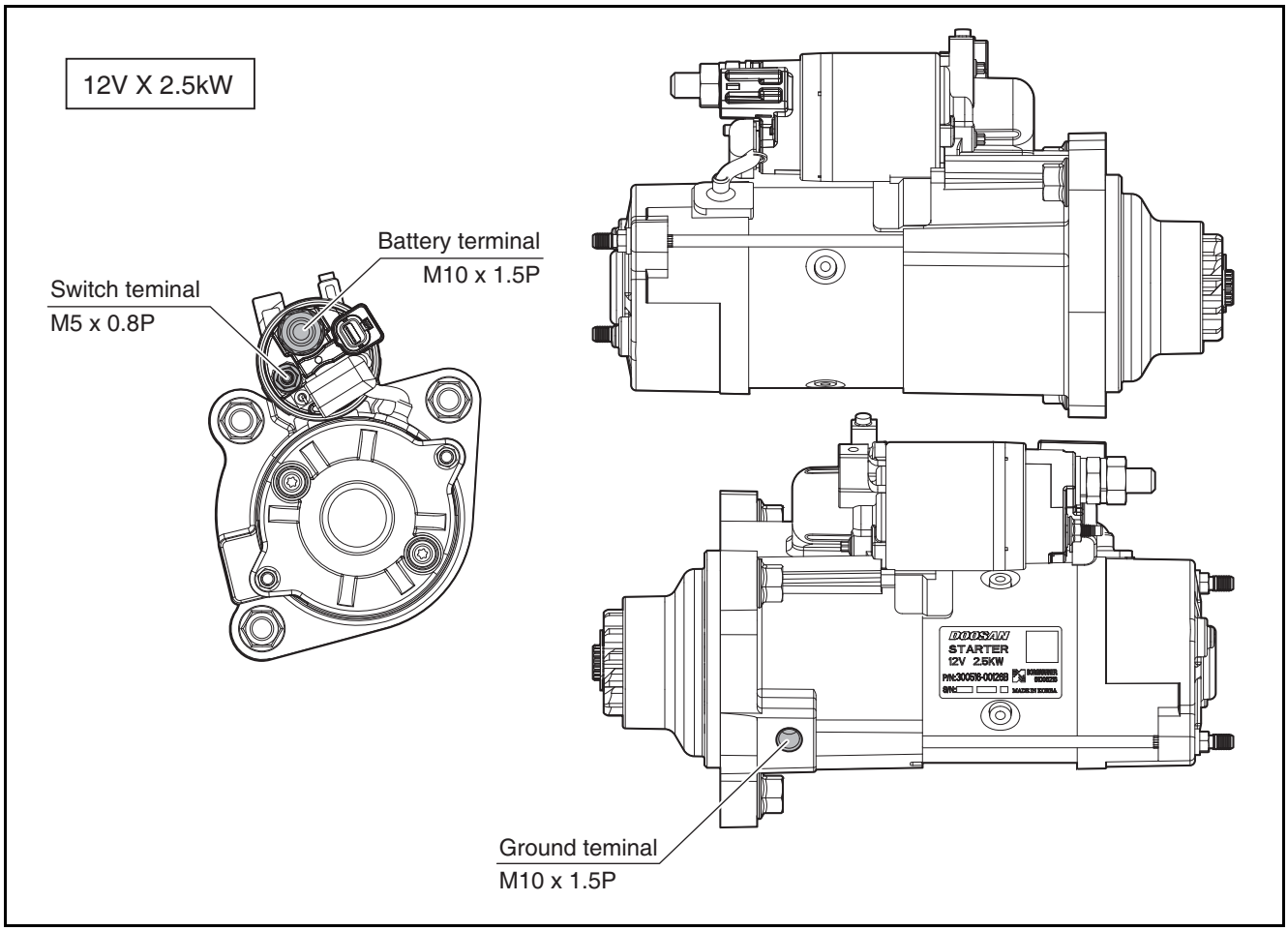

ED24190139

Wiring Diagram

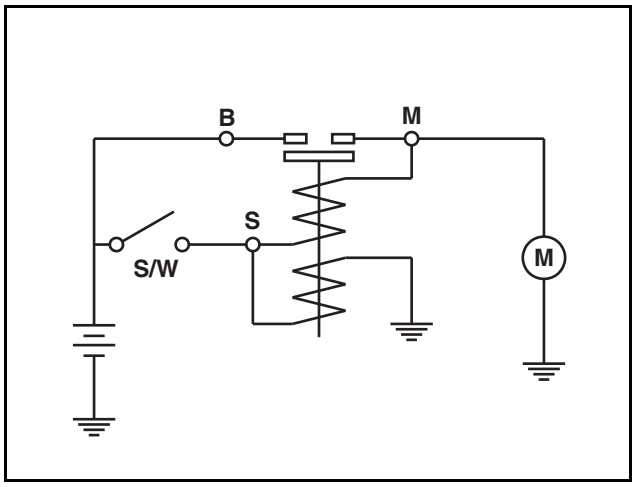

ED24190140

Note) The starter should be away from moisture in any case and any time.

⚠ CAUTION

Before working on the electrical system, separate the ground wire (negative (-) wire) of the battery. Short circuit may occur while working on the electrical system. Connect the ground wire last after completing all of work.

Disassembly of Starter

1. Detach the starter.

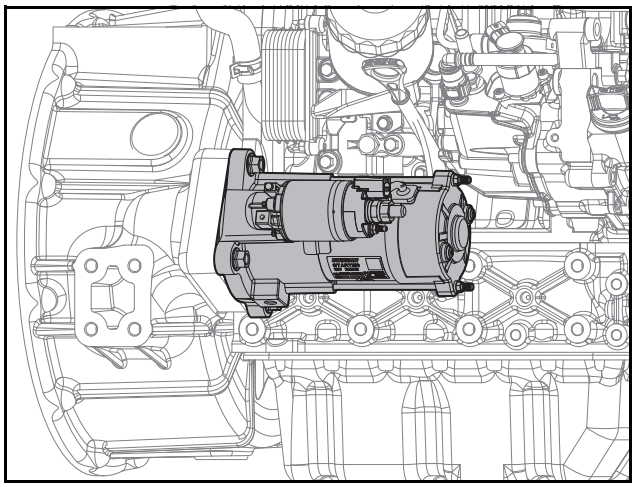

ED18190046

1) Loosen 3 flange nuts.
2) Detach the starter.

Assembly of Starter

1. Attach the starter.

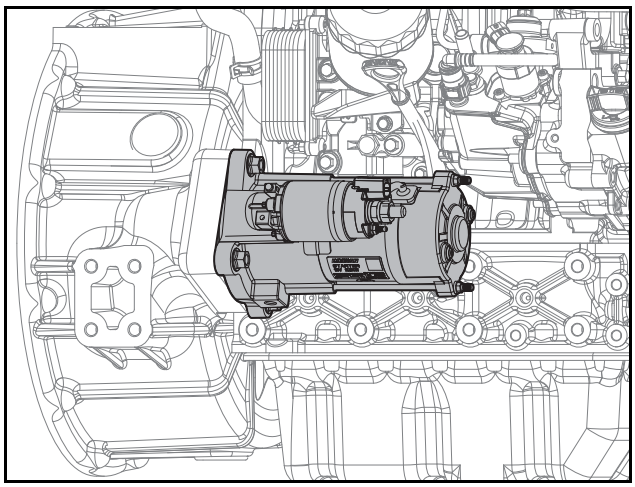

ED18190046

1) Align the starter with the pin and attach it.
2) Tighten 3 flange nuts at a tightening torque of 4.4 ±1.1 kgf·m.

Alternator

General Information

The alternator is fitted with integral silicon rectifiers.
A transistorized regulator mounted on the alternator body interior limits the alternator voltage.

The alternator should not be operated except with the regulator and battery connected in circuit
to avoid damage to the rectifier and regulator.

13.5V X 110A (Option Type 1)

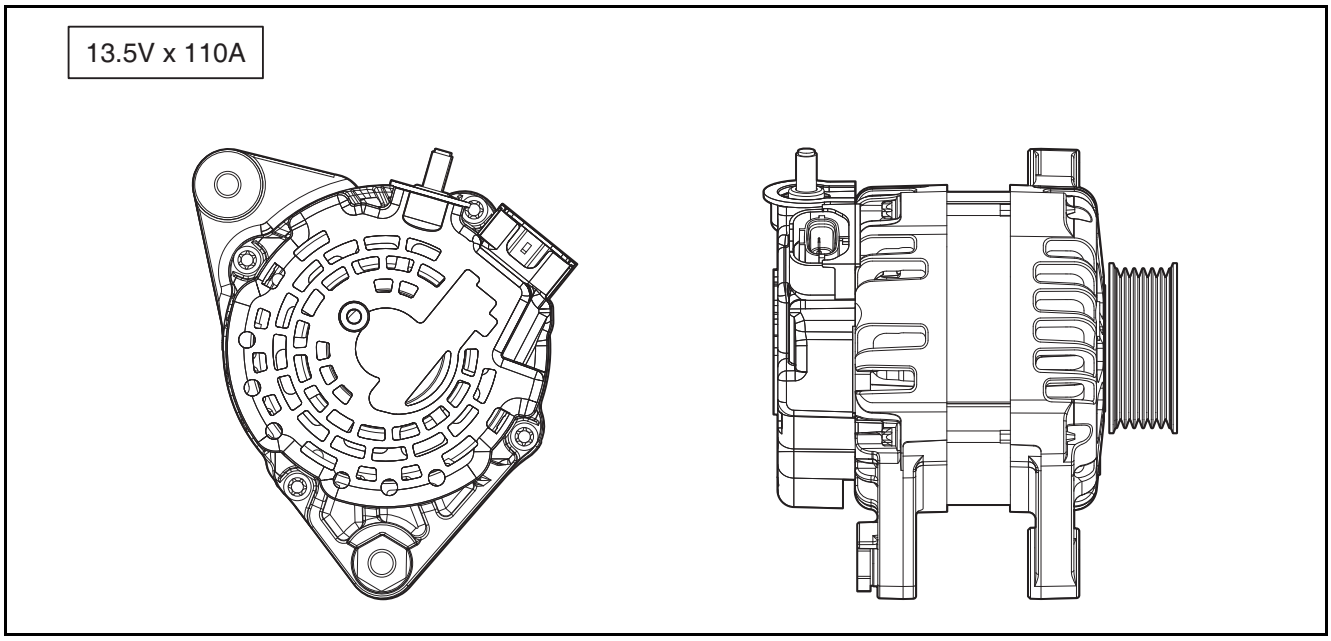

ED24190180

13.5V X 140A (Option Type 2)

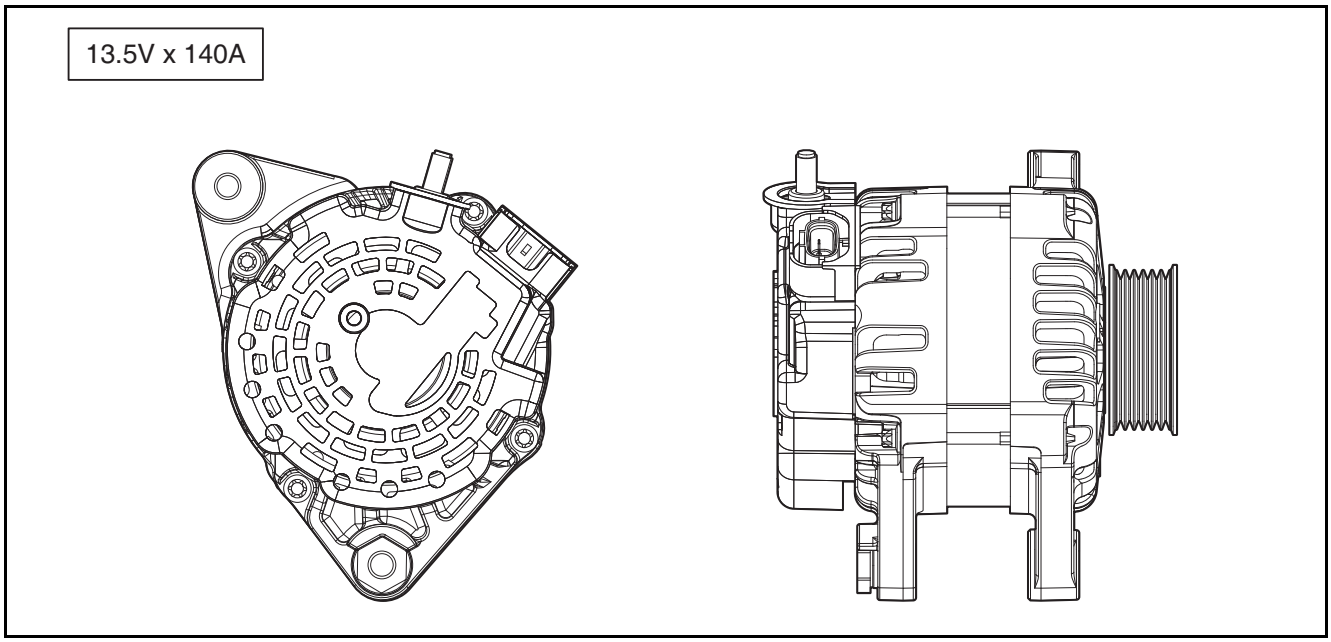

ED24190187

Wiring Diagram

The alternator is maintenance-free, nevertheless, it must be protected against dust and, above all, against moisture and water.

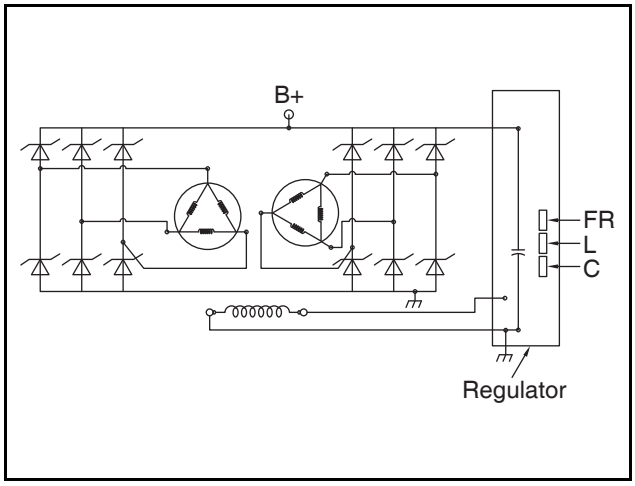

ED24190181

Disassembly of Alternator

1. Remove the V-belt.

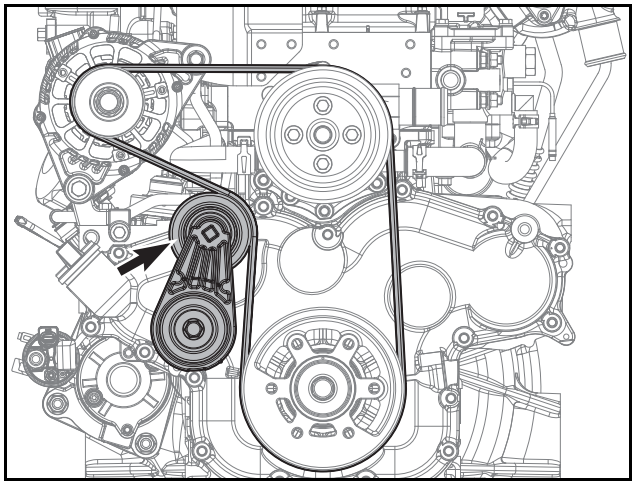

ED18190044

1) Turn the auto tensioner counterclockwise by using a quadrangular groove at the top of the auto tensioner pulley (Use a 10 mm x 10 mm quadrangular tool).
2) Remove the belt wound around the auto tensioner pulley by using a space generated by the rotation of the auto tensioner.

2. Detach the alternator.

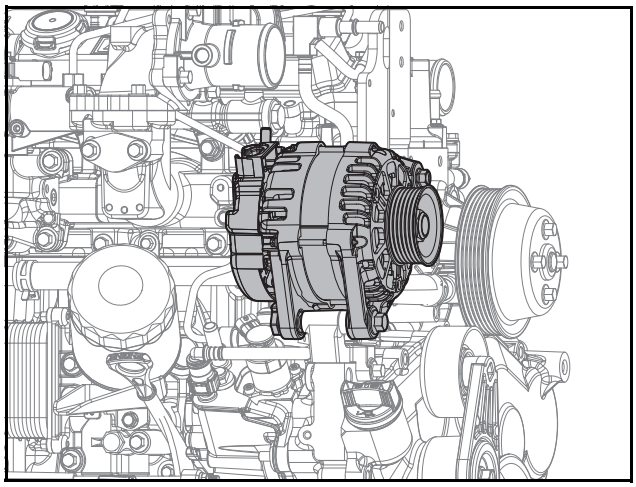

ED18190045

1) Loosen the upper/lower bolt and remove the alternator.
2) When loosing bolt, take care not to lose nut.

Assembly of Alternator

1. Attach the alternator.

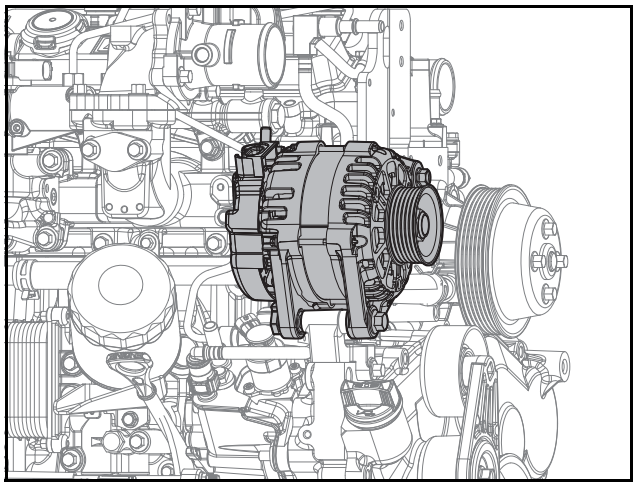

ED18190045

1) Using bolt B and nut, attach the alternator temporarily.
2) By tightening bolt, set the position of the alternator properly.
3) Tighten upper bolt to a torque of 2.2 ±0.2 kgf·m.
4) Tighten lower bolt to a torque of 6.2 ±0.6 kgf·m.

2. Attach the V-belt.

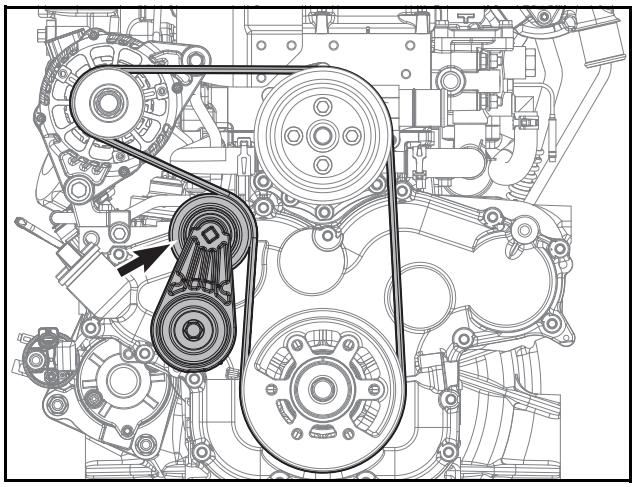

ED18190044

1) Wind a new belt around all pulleys except for the auto tensioner.
2) Turn the auto tensioner counterclockwise by using a quadrangular groove at the top of the auto tensioner pulley (Use a 10 mm x 10 mm quadrangular tool).
3) Wind the belt around the auto tensioner pulley by using a space generated by the rotation of the auto tensioner, and then naturally release the tensioner that has been pulled counterclockwise.

⚠ CAUTION

For checking and measuring the belt tension, refer to Belt Tension in Chapter 12 (Others/Driving Units).

12. Others/driving system

General information 259
General Information 259
Specifications 260
Crankshaft 261
Disassembly of Crankshaft 261
Assembly of Crankshaft 261
Measurement of Crankshaft Main Journal Diameter 261
Measurement of Crankshaft Bearing Gap 261
Measurement of Crankshaft Warpage 261
Disassembly of Timing Wheel 262
Assembly of Timing Wheel 263
Piston 266
Disassembling the Pistons 266
Assembling the Pistons 266
Measurement of Outside Diameter of Piston Pin 267
Measurement of Inside Diameter of Piston Pin Bore 267
Measurement of Gap of Piston Ring End 268
Measurement of Step Height of Piston Top Side 268
Connecting rod 269
Disconnection of Connecting Rod 269
Assembly of Connecting Rod 269
Measurement of Inside Diameter of Connecting Rod Small-end 269
Measurement of Connecting Rod Large-end Bore 269
Measurement of Gap of Connecting Rod Big-end 270
Flywheel 271
Disassembly of Flywheel 271
Assembly of Flywheel 271
Crankshaft pulley 273
Disassembly of Crankshaft Pulley 273
Assembly of Crankshaft Pulley 273
Others 275
Engine Timing 275
Adjustment of Engine Timing 276
Check of Gear Backlash 276
Check of Gear Axial Offset 276

General information

General Information

1. The forged crankshaft is an integral structure. The crankshaft and the rear oil seals prevent oil from permeating into the Drive Plate housing.
2. The connecting rod is forged and its large end part is vertically separated.
   Therefore, like a piston, the connecting rod can be disassembled through the upper side of the cylinder.
   An alloy-type prefabricated bearing is used for the active part of the crankshaft and the connecting rod.
3. The camshaft, oil pump, and high-pressure injection pump are driven by gear connection in the timing gear case.

Specifications

Item		Specifications DM01-LEP00/LEP01/LEP02/LEP03/LEP04/LEP05/MFP00/MFP01/MFP02/MFP03/MFP04/MFP05	Remarks
Others/Driving System			
Piston outside diameter		Grade A: 89.920 ~ 89.930 mm Grade B: 89.930 ~ 89.940 mm	
Gap between cylinder and piston		0.060 ~ 0.080 mm	
Piston ring groove area	Top ring groove	1.915 ~ 1.945 mm	
	2nd ring groove	2.060 ~ 2.080 mm	
	Oil ring groove	3.020 ~ 3.040 mm	
Piston ring side gap	Top ring side gap	0.083 ~ 0.133 mm	
	2nd ring side gap	0.070 ~ 0.110 mm	
	Oil ring side gap	0.030 ~ 0.070 mm	
Piston ring end gap	Top ring end gap	0.20 ~ 0.30 mm	
	2nd ring end gap	0.55 ~ 0.70 mm	
	Oil ring end gap	0.2 ~ 0.4 mm	
Piston pin outside diameter		30.995 ~ 31,000 mm	
Piston pin hole bore		31.008 ~ 31.014 mm	
Piston pin hole gap		0.008 ~ 0.019 mm	
Connecting rod small-end bore		31.025 ~ 31.038 mm	
Connecting rod small-end hole gap		0.025 ~ 0.043 mm	
Connecting rod large-end bore		57,000 ~ 57.015 mm	
Connecting rod bearing oil gap		0.026 ~ 0.064 mm	
Connecting rod end play		0.15 ~ 0.3 mm	
Crankshaft main journal outside diameter		57.955 ~ 57.970 mm	
Crankshaft pin journal outside diameter		53.955 ~ 53.970 mm	
Crankshaft main bearing oil gap		0.029 ~ 0.059 mm	
Crankshaft end play		0.1 ~ 0.31 mm	

Crankshaft

Disassembly of Crankshaft

1. Remove the crankshaft.

Note) Refer to Chapter 5 (Procedure of Disassembling an Engine)

Assembly of Crankshaft

1. Attach the crankshaft.

Note) Refer to Chapter 5 (Procedure of Assembling an Engine).

Measurement of Crankshaft Main Journal Diameter

1. Check whether there is any cracked or scratched part on the journal and pins of the crankshaft with the naked eye.
2. Perform the magnetic particle testing or the liquid penetrant testing to check the cracks on the crankshaft. If cracks are found, replace the crankshaft with a new one.
3. Set the gauge.
4. Remove foreign substances from the crankshaft.
5. Measure the diameter of the crankshaft main journal

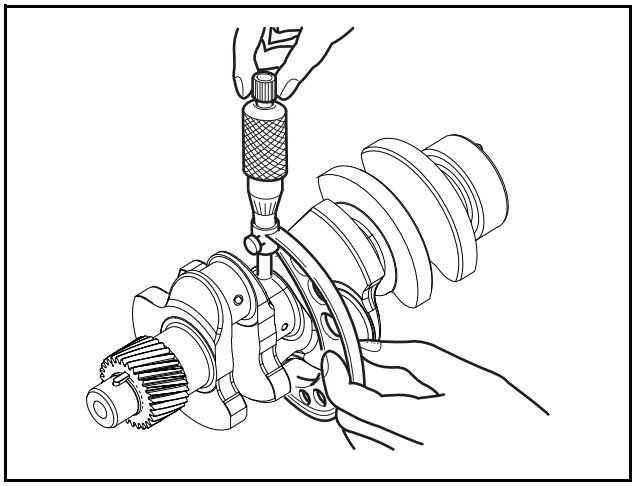

EDL013096A

1) Measure the diameter of the crankshaft journal with the outside diameter micrometer.
2) Measure total 20 points of the inside diameter of the idle gear: 5 points of vertical (A), horizontal (B), front (C), and rear (D).
3) The standard measurement value of the diameter of the crankshaft journal is within the range of 57.955 ~ 57.970 mm.

Item	Specified Value
Crankshaft journal diameter	57.955 ~ 57.970 mm

Measurement of Crankshaft Bearing Gap

1. Mount the crankshaft to the cylinder block.
2. Measure the gap of the crankshaft bearing.

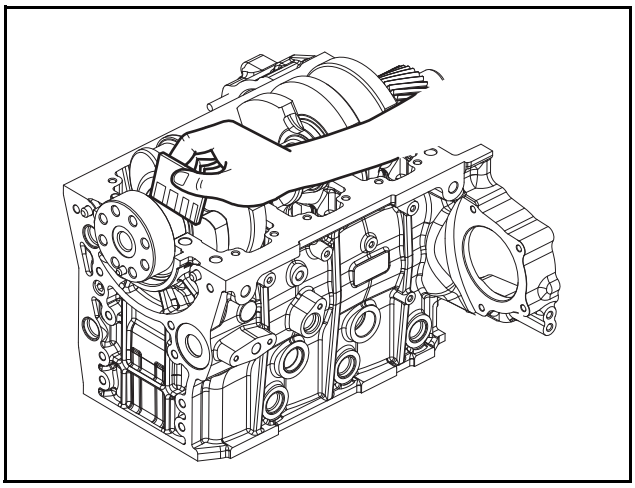

ED18190036

1) Put the plastic gauges on 5 points on the crankshaft which contact with the crankshaft bearing part.
2) Assemble the crank case at the specified torque and then disassemble it.
3) Check the width of the plastic gauges.
4) The standard measurement value of the gap of the crankshaft bearing is within the range of 0.029 ~ 0.059 mm.

Item	Specified Value
Crankshaft Bearing Gap	0.029 ~ 0.059 mm

3. Remove the plastic gauges.
4. Remove the plastic gauges.
5. Remove any foreign substances from the cylinder block and the crankshaft.

Measurement of Crankshaft Warpage

1. Measure the crankshaft warpage.

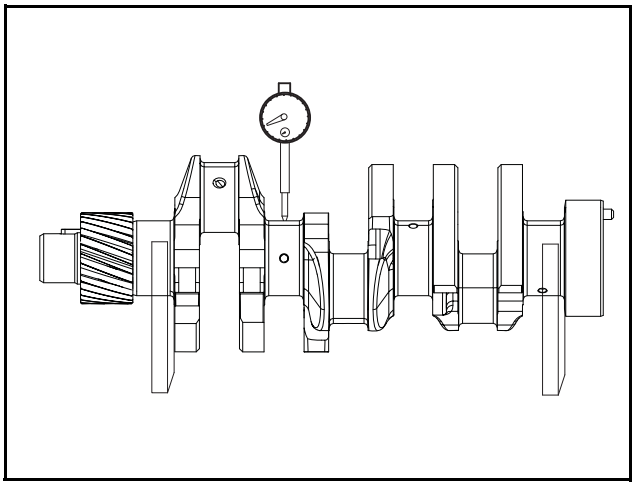

EDL013098A

1) Put the #1 and #5 main journal of the crankshaft on the V- block.
2) Put the dial gauge on the surface plate and measure the warpage of the crankshaft as spinning the crankshaft.
3) The standard measurement value of the warpage of the crankshaft is 0.02 mm for #2 and #4 and 0.03 mm for #3 based on #1 and #5 main journal.

Disassembly of Timing Wheel

1. Remove the V-belt.

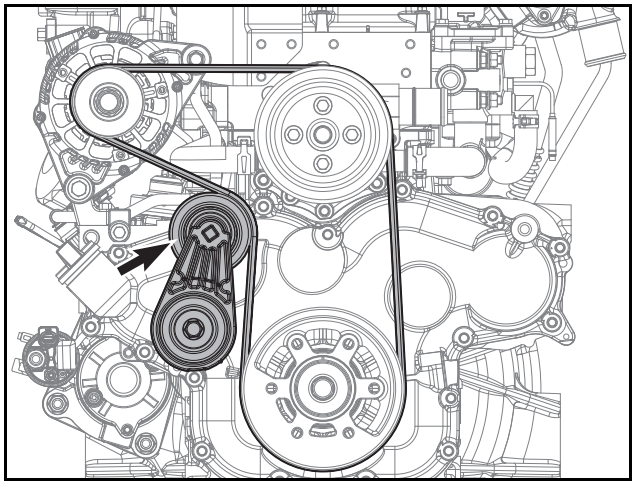

ED18190044

1) Turn the auto tensioner counterclockwise by using a quadrangular groove at the top of the auto tensioner pulley (Use a 10 mm x 10 mm quadrangular tool).
2) Remove the belt wound around the auto tensioner pulley by using a space generated by the rotation of the auto tensioner.
2. Remove the crankshaft pulley.

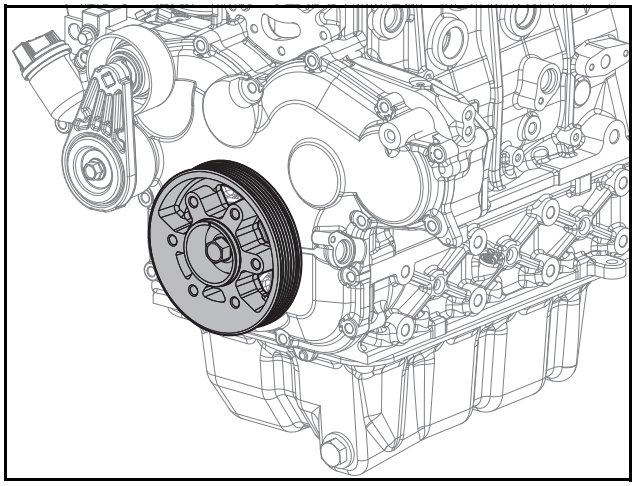

ED1819074

1) Loosen the flange hex bolt.
2) Remove the crankshaft pulley.

⚠ CAUTION

Be careful not to damage the oil seal.

3. Remove the timing gear case.

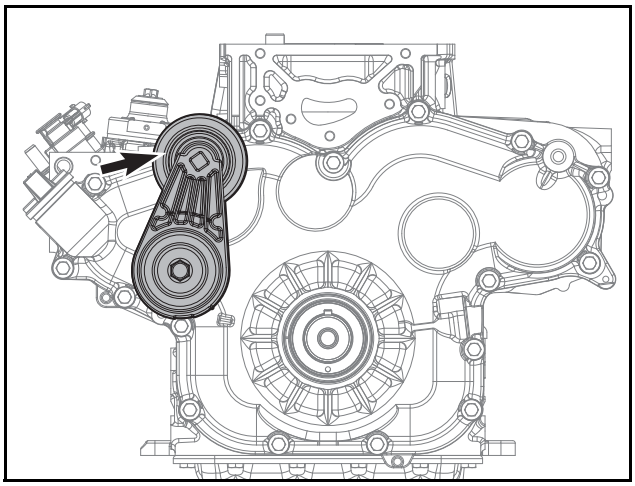

ED24190138

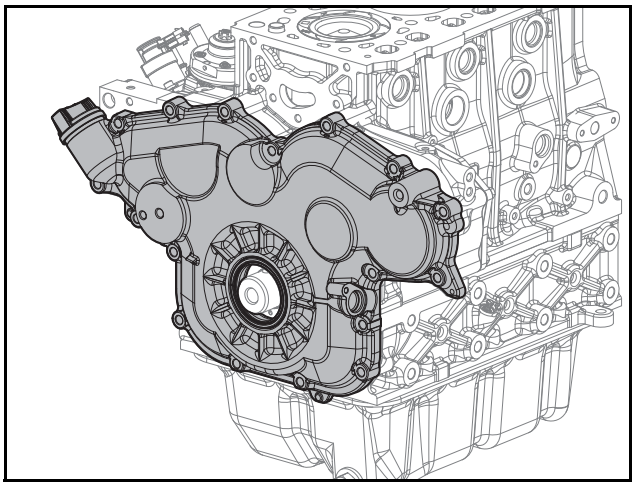

ED1819076

1) Loosen the flange hex bolt and remove the auto tensioner.
2) Loosen the fixing bolt and remove the crank speed sensor.
3) Loosen 16 hex bolts.
4) Remove the timing gear case.

⚠ CAUTION

Do not reuse the oil seal; replace them with new ones.

4. Remove the timing wheel.

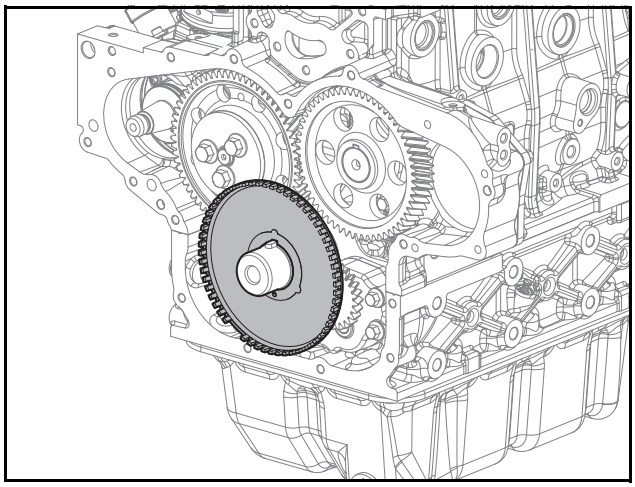

ED1819077

1) Remove the timing wheel.

Assembly of Timing Wheel

1. Attach the timing wheel.

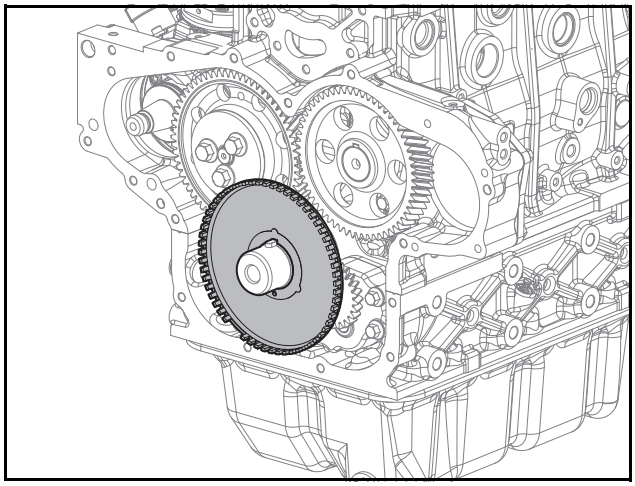

ED1819077

1) Align the timing wheel to the pin and attach it to the crankshaft gear surface.

⚠ CAUTION

Be careful not to damage the teeth of the timing wheel.

2. Attach the timing gear case.

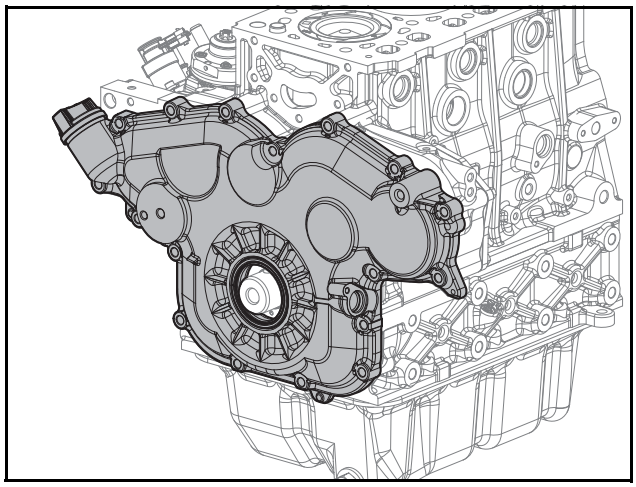

ED1819076

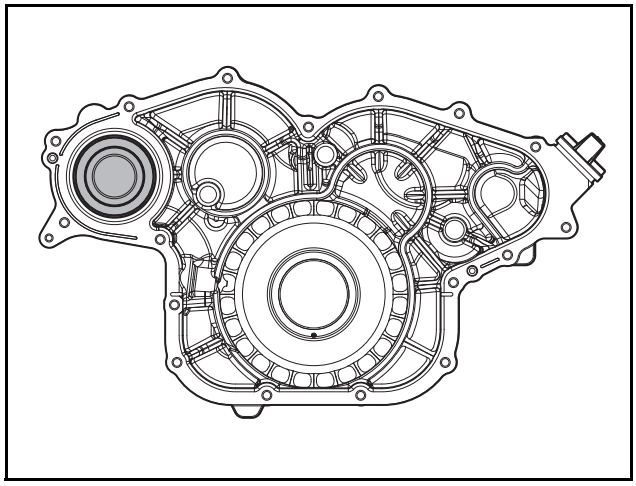

EDM02200047

Note) Apply as follows and use TB1217H equivalent product.

Note) Apply to the surface of TGC cover with ø2.5 ±0.5 mm thickness.

Note) The PTO bearing is included in the timing gear case. Hence, in the event of a bearing defect, replace the entire TGCC (Timing Gear Case Cover) assembly.

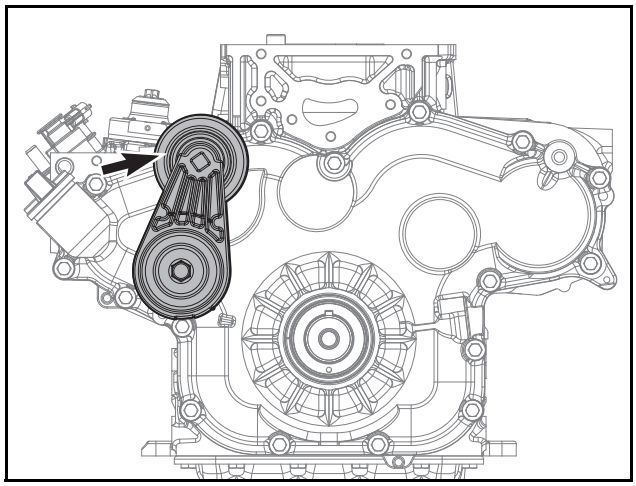

ED24190138

1) Make the assembly surface of the timing gear case face the ground.
2) Mount the front oil seal to the front oil seal assembly jig.
3) Align the front oil seal assembly jig where the front oil seal is mounted to the timing gear case and beat it with a rubber hammer.
4) when the front oil seal is inserted to the timing gear case, pull off the front oil seal assembly jig.

⚠ CAUTION

- **Be careful in noting the direction of the oil seal assembly and ensuring that the oil seal surface fasces the outside of the engine.**
- **Be careful of the depth of the oil seal when attaching it.**
- **Be careful not to damage the oil seal.**
- **Attach the oil seal without applying lubrication. coolant, fuel, sealant (TB1217H), or silicon.**
- **Remove foreign substances such as residues from the oil seal assembly bore.**
- **Do not reuse the oil seal; replace it with a new one.**
- **Be careful not to damage the oil seal when attaching it.**

5) Remove the foreign substances on the timing gear case assembly surface and clean it with a dry cloth.
6) Apply sealant (TB1217H) to the timing gear case assembly surface with the diameter of Ø2.5 ±0.5 mm.

⚠ CAUTION

- **Be careful that the timing gear case has been attached in the right direction.**
- **Attach parts within five minutes of applying sealant (TB1217H) onto the parts.**
- **Do not start the engine or load pressure for 25 minutes after applying sealant (TB1217H) onto the parts**

7) Align the timing gear case with the pin and attach it.
8) Tighten 16 hex bolts at a tightening torque of 2.2 kgf·m.
9) Mount the crank speed sensor and then tighten the fixing bolt.

3. Attach the crankshaft pulley.

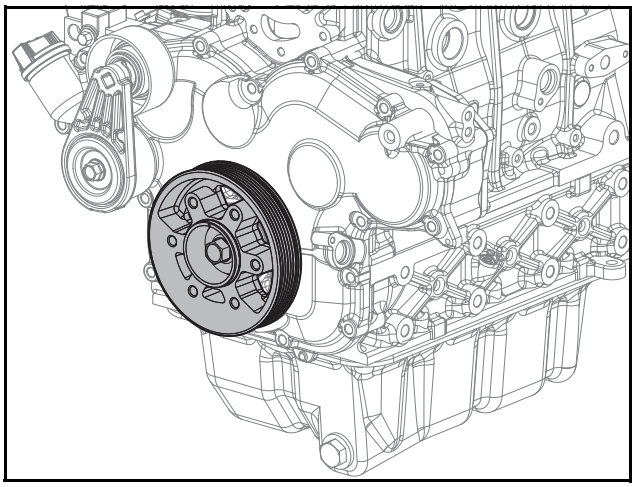

ED1819074

1) Align the crankshaft pulley to the pin and attach it.
2) Tighten flange hex bolts at a tightening torque of 26 kgf·m.

⚠ CAUTION

- **Be careful not to damage the oil seal.**
- **Fix the crankshaft to allow the flange hex bolts to be tightened with the specified torque.**

4. Attach the V-belt.

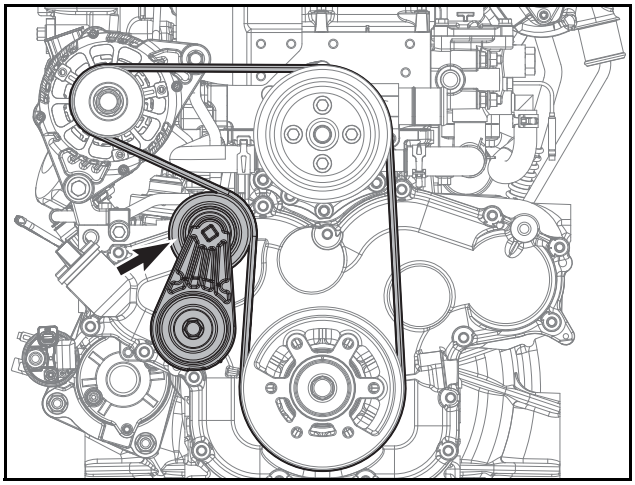

ED18190044

1) Wind a new belt around all pulleys except for the auto tensioner.
2) Turn the auto tensioner counterclockwise by using a quadrangular groove at the top of the auto tensioner pulley (Use a 10 mm x 10 mm quadrangular tool).

3) Wind the belt around the auto tensioner pulley by using a space generated by the rotation of the auto tensioner, and then naturally release the tensioner that has been pulled counterclockwise.

⚠ CAUTION

For checking and measuring the belt tension, refer to Belt Tension in Chapter 12 (Others/Driving Units).

Piston

Disassembling the Pistons

1. Remove the pistons.

Note: Refer to the order of engine disassembly.

2. Remove the piston rings.

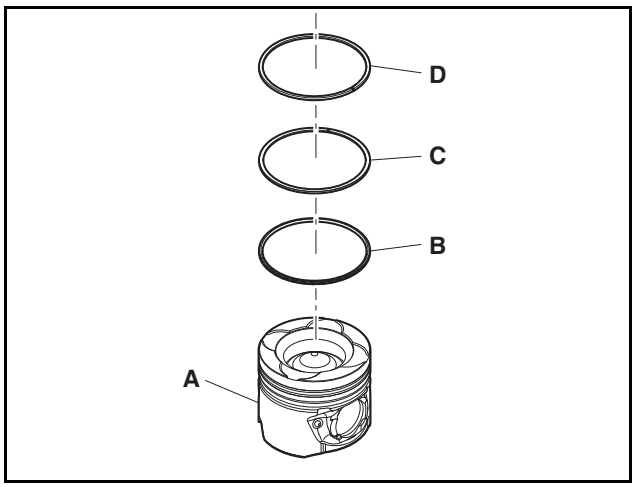

EDM02190213

1) Use piston ring pliers to remove the top ring (D), second ring (C) and oil ring (B).

Assembling the Pistons

1. Assemble the piston ring.

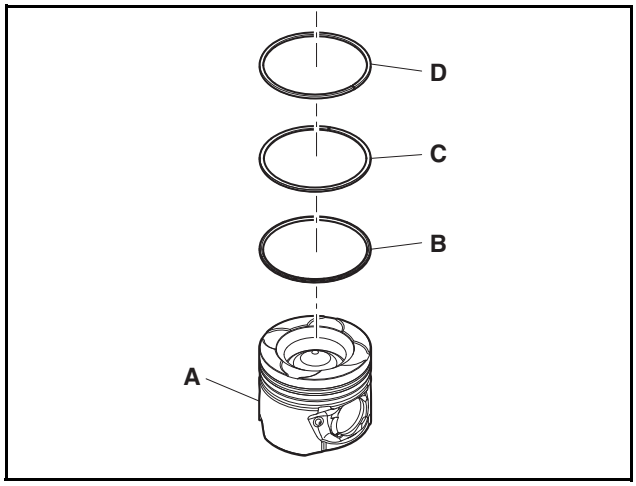

EDM02190213

1) Use piston ring pliers to assemble the top ring (B), second ring (C) and oil ring (D).

2. Assemble the pistons.

Note: Refer to the order of engine assembly.

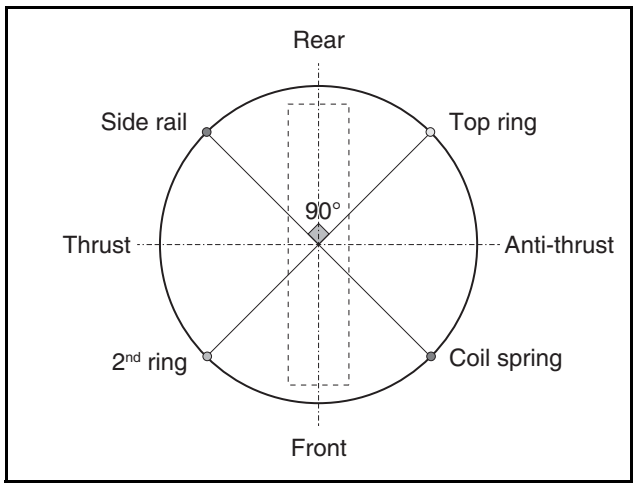

EDM03190321

1) Top and 2nd ring should be assembled into the mating ring grooves with upper mark "manufacturer mark" upward
2) Ring end gap should be set downwards during assembly.
3) Snap ring should be assembled in front side of piston pin hole.

Measurement of Outside Diameter of Piston Pin

1. Set the gauge.
2. Measure the outside diameter of the piston pin.

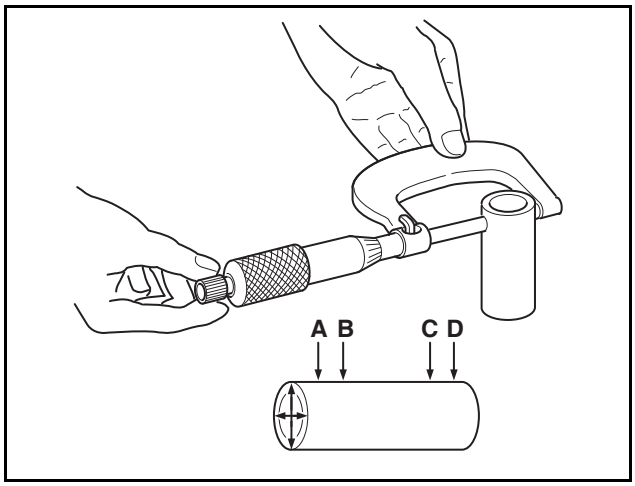

EDL022132A

1) Measure total 8 points of the piston pin outside diameter: A, B, C, and D, in the vertical and horizontal directions.
2) Measure all 4 points of the piston pin.
3) The standard measurement value of the outside diameter of the piston pin is within the range of 30.995 ~ 31 mm.

Item	Specified Value
Piston pin outside diameter	30.995 ~ 31 mm

Measurement of Inside Diameter of Piston Pin Bore

1. Set the gauge.
2. Measure the inside diameter of the piston pin bore.

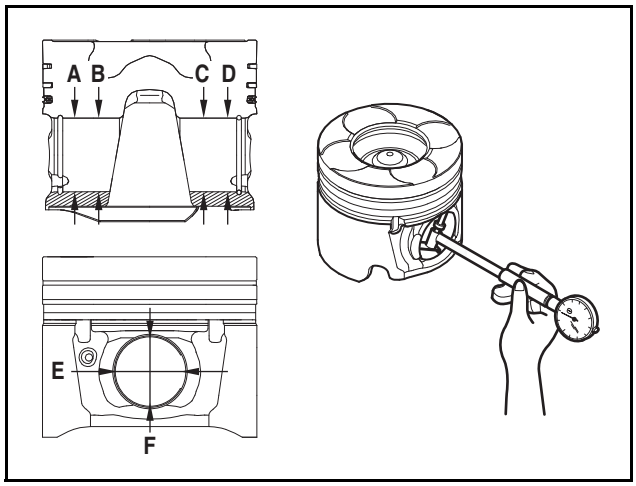

EDL022133A

1) Measure total 8 points of the inside diameter of the piston pin bore: A, B, C, D, vertical (E), and horizontal (F).
2) Measure all of 4 piston pin bores.
3) The standard measurement value of the inside diameter of the piston pin bore is within the range of 31.008 ~ 31.014 mm.

Item	Specified Value
Piston pin of the piston Inside diameter of bore	31.008 ~ 31.014 mm

Measurement of Gap of Piston Ring End

1. Measure the gap of the piston ring end.

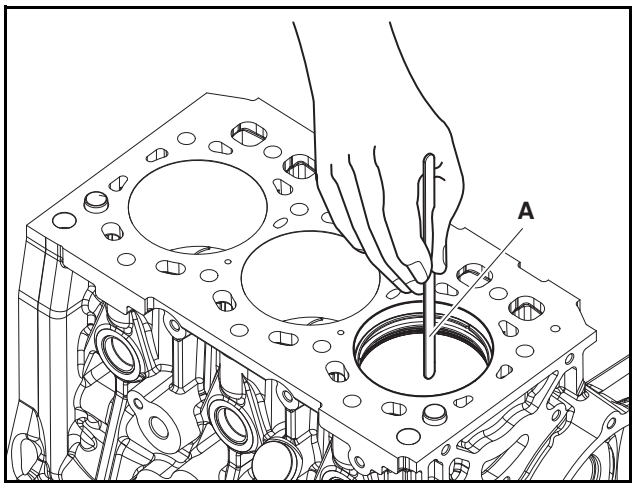

ED18190037

1) Insert the piston ring to the cylinder top at a right angle with the wall.
2) Measure the piston ring end gap with the gap gauge (A).
3) Measure the gaps of the top ring, the 2nd ring, and the oil ring.
4) The standard measurement values of the gap of the piston ring end is within the range of 0.20 ~ 0.35 mm for the top ring, 0.55 ~ 0.70 mm for the 2nd ring, and 0.20 ~ 0.40 mm for the oil ring.

Item	Specified Value
Gap of top ring	0.20 ~ 0.35 mm
Gap of 2nd ring	0.55 ~ 0.70 mm
Gap of oil ring	0.20 ~ 0.40 mm

⚠ CAUTION

Be careful not to damage the cylinder with the gap gauge when measuring the gap of the piston ring end.

Measurement of Step Height of Piston Top Side

1. Perform the zero point adjustment of the meter based on the top surface of the cylinder block.
2. Measure the step height of the piston top side.

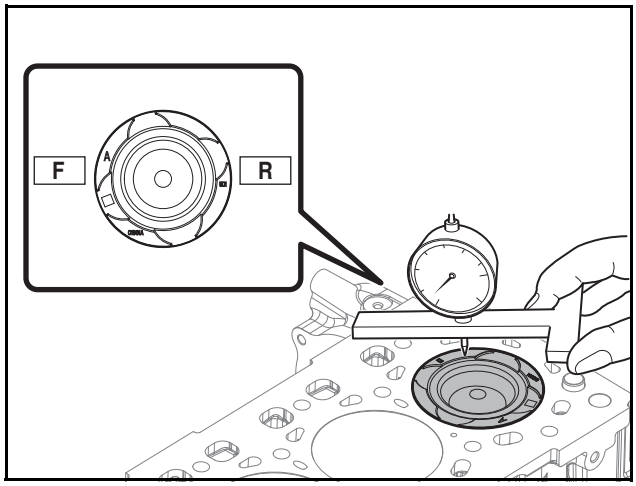

ED18190038

1) Adjust the piston to position on the top dead point.
2) Measure the step height on A and B on the piston top side based on the cylinder block surface.
3) Adjust the other pistons to position on the top dead point and measure 8 points.
4) The standard measurement value of the step height of the piston top side is within the range of 0.11 ~ 0.39 mm.

Item	Specified Value
Step height of piston top side	0.11 ~ 0.39 mm

⚠ CAUTION

- **Select the cylinder head gasket class based on the average of step heights of the piston top side by measuring average value of step heights at 8 points. For the cylinder gasket class, refer to Procedure of Assembling an Engine of General Information in Chapter 5.**
- **The front engine direction (F) is the water pump direction and the rear engine direction (R) is the Drive Plate direction.**

Connecting rod

Disconnection of Connecting Rod

1. Disconnect the connecting rod.

Note) Refer to Chapter 5 (Procedure of Disassembling an Engine).

Assembly of Connecting Rod

1. Connect the connecting rods.

Note) Refer to Chapter 5 (Procedure of Assembling an Engine).

Measurement of Inside Diameter of Connecting Rod Small-end

1. Set the gauge.
2. Measure the inside diameter of the small end of the connecting rod.

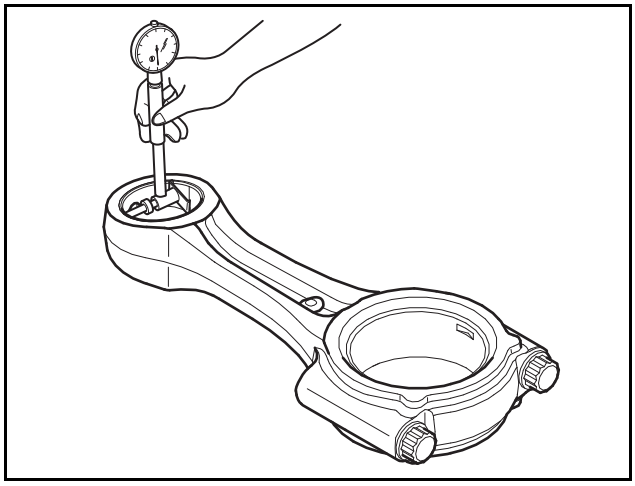

EDL022197B

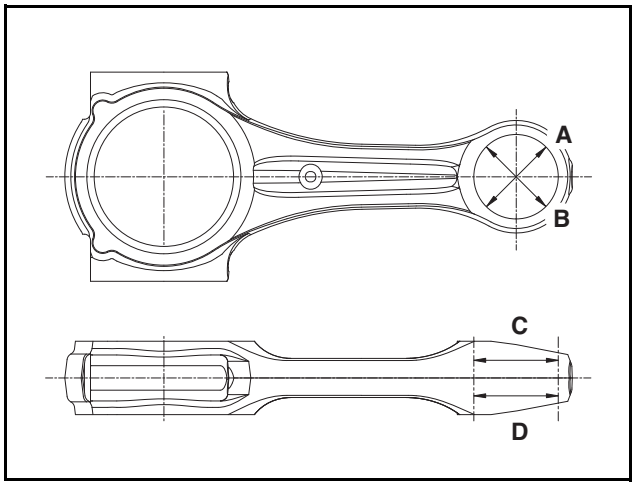

EDL022198B

1) Measure total 4 points of the inside diameter of the connecting rod small-end: vertical (A), horizontal (B), front (C), and rear (D).
2) Measure all of 4 connecting rods.
3) The standard measurement value of the inside diameter of the connecting rod small-end is within the range of 31.025 ~ 31.038 mm.

Item	Specified Value
Connecting rod small-end bore	31.025 ~ 31.038 mm

Measurement of Connecting Rod Large-end Bore

1. Set the meter.
2. Measure the inside diameter of the large-end of the connecting rod.

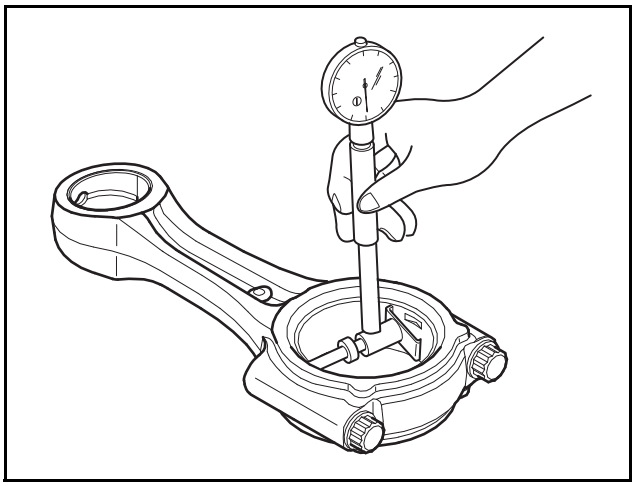

EDL022199B

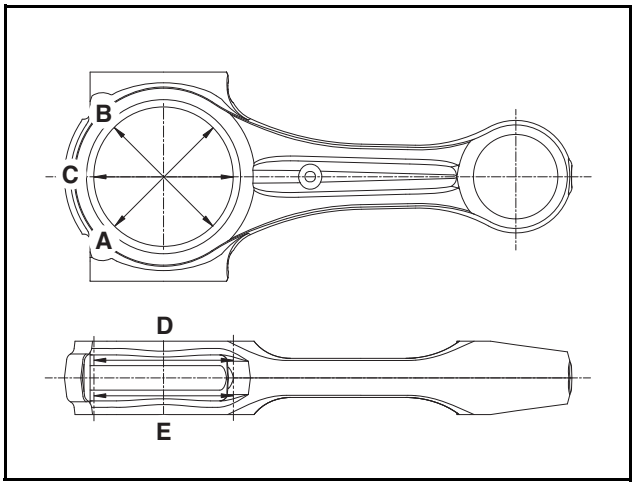

EDL022200B

1) Measure total 6 points of the inside diameter of the connecting rod big-end: A, B, C, front (D), and rear (E).
2) Measure all of 4 connecting rods.
3) The standard measurement value of the inside diameter of the connecting rod big-end is within the range of 57.0 ~ 57.015 mm.

Item	Specified Value
Connecting rod large-end bore	57.0 ~ 57.015 mm

⚠ CAUTION

Connect the connecting rods manually until the head of the connecting rod bolt contacts the bolt bearing surfaces on both sides, and then tighten them at the specified torque.

Measurement of Gap of Connecting Rod Big-end

1. Mount the crankshaft to the cylinder block.
2. Measure the gap of the connecting rod big-end.

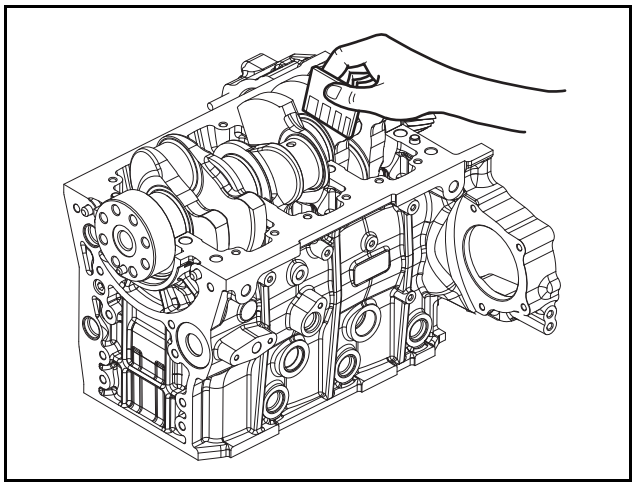

ED18190040

1) Put the plastic gauges on 4 points on the crankshaft that contacts with the connecting rods.
2) Connect the connecting rods.
3) Temporarily connect the connecting rods manually.
4) Tighten the connecting rod bolts at a tightening torque of 2 kgf·m + 90° with the angle method.
5) Loosen the connecting rod bolts.
6) Remove the connecting rod cap.
7) Check the width of the plastic gauges.
8) The standard measurement value of the gap of the connecting rod big-end is within the range of 0.026 ~ 0.064 mm.

Item	Specified Value
Gap of Connecting Rod Big-end	0.026 ~ 0.064 mm

3. Remove the plastic gauges.

1) Remove the plastic gauges.
2) Remove any foreign substances from the crankshaft and the connecting rod big-end.

Flywheel

Disassembly of Flywheel

1. Detach the starter.

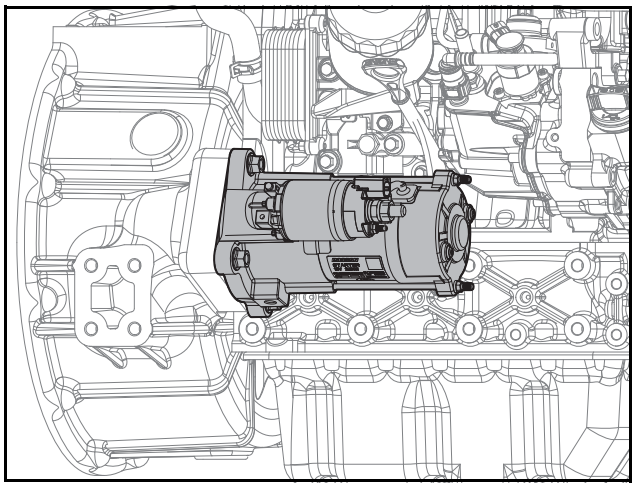

ED18190046

1) Loosen 3 flange nuts.
2) Detach the starter.
2. Remove the flywheel.

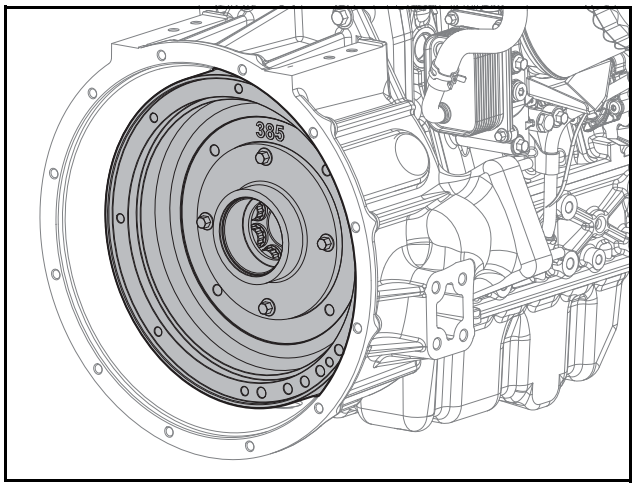

ED18190047

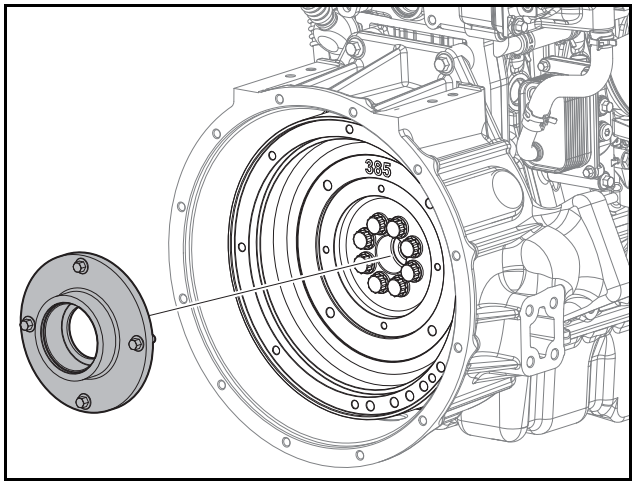

ED18190048

1) Loosen 8 flange hex bolts.
2) Remove the flywheel.

Assembly of Flywheel

1. Mount the flywheel.

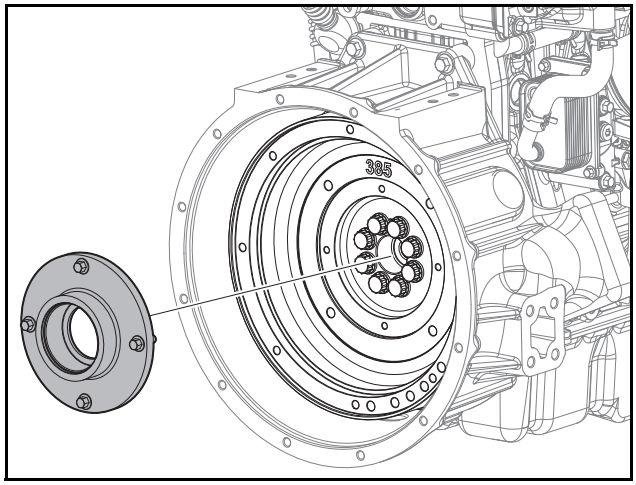

ED18190048

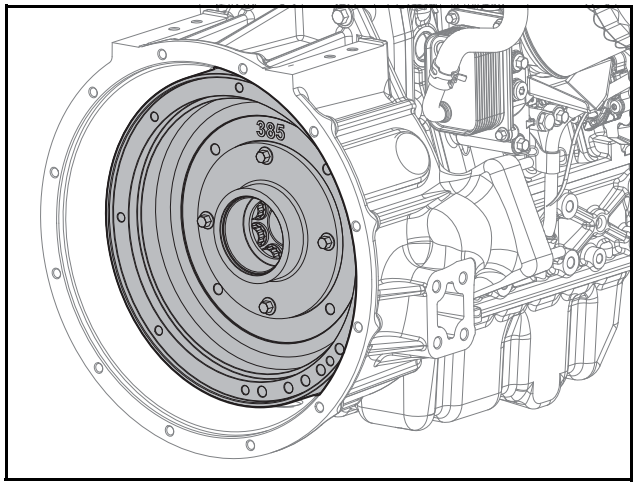

ED18190047

1) Mount the flywheel.
2) Tighten 8 Flange hex bolts at tightening bolt torque.

Flywheel bolt (43 mm, option)	1st: 7 ±0.35 kgf·m/2nd: 45° ±4°
Flywheel bolt (25 mm, option) for flat type flywheel	17 ±0.85 kgf·m

⚠ CAUTION

Be careful that no foreign material (oil, etc.) is present in the bolt and tap.

2. Attach the starter.

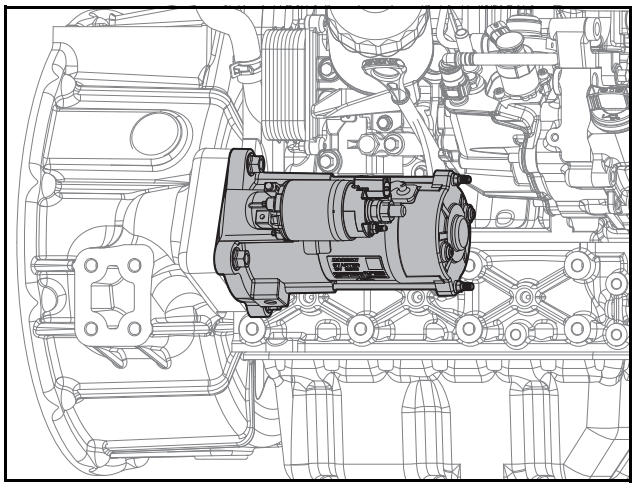

ED18190046

1) Align the starter with the pin and attach it.
2) Tighten 3 flange nuts at a tightening torque of 4.4 ±1.1 kgf·m.

Crankshaft pulley

Disassembly of Crankshaft Pulley

1. Remove the V-belt.

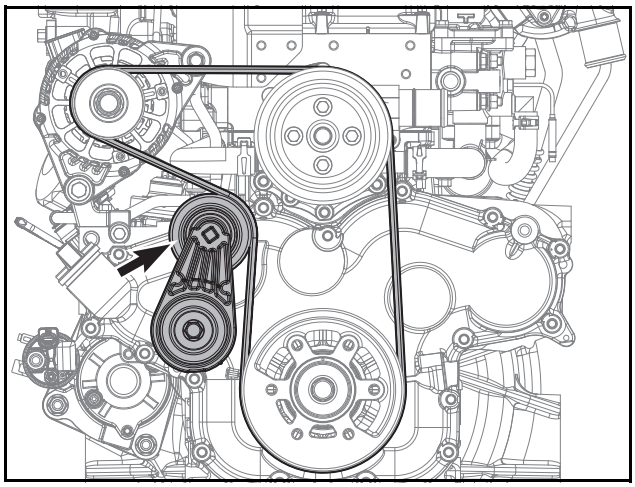

ED18190044

1) Turn the auto tensioner counterclockwise by using a quadrangular groove at the top of the auto tensioner pulley (Use a 10 mm x 10 mm quadrangular tool).
2) Remove the belt wound around the auto tensioner pulley by using a space generated by the rotation of the auto tensioner.
2. Remove the crankshaft pulley.

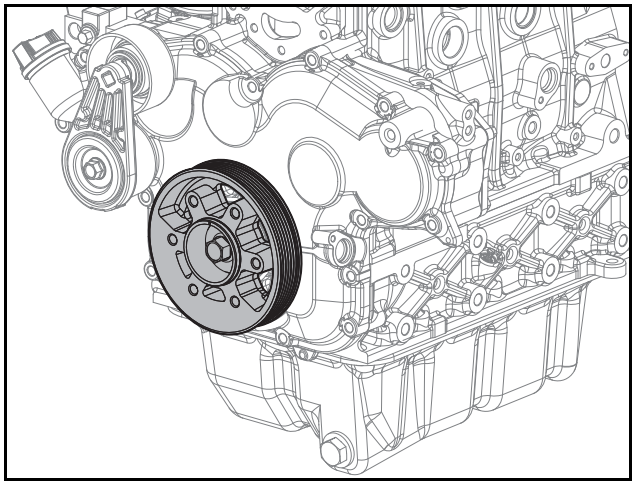

ED1819074

1) Loosen the flange hex bolt.
2) Remove the crankshaft pulley.

⚠ CAUTION

Be careful not to damage the oil seal.

Assembly of Crankshaft Pulley

1. Attach the crankshaft pulley.

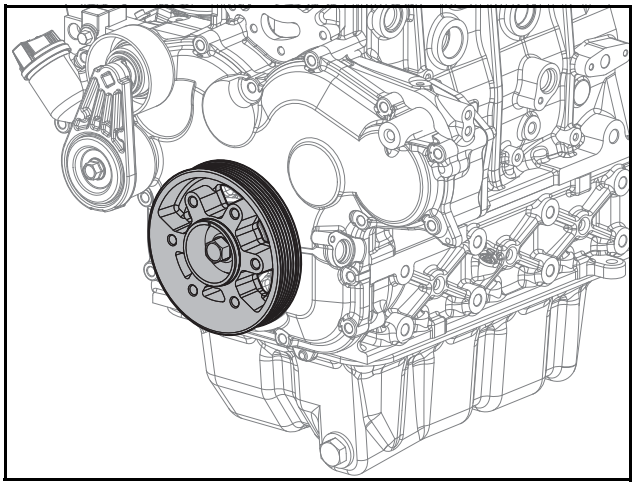

ED1819074

1) Align the crankshaft pulley to the pin and attach it.
2) Tighten flange hex bolts at a tightening torque of 26 kgf·m.

⚠ CAUTION

- **Be careful not to damage the oil seal.**
- **Fix the crankshaft to allow the flange hex bolts to be tightened with the specified torque.**

2. Attach the V-belt.

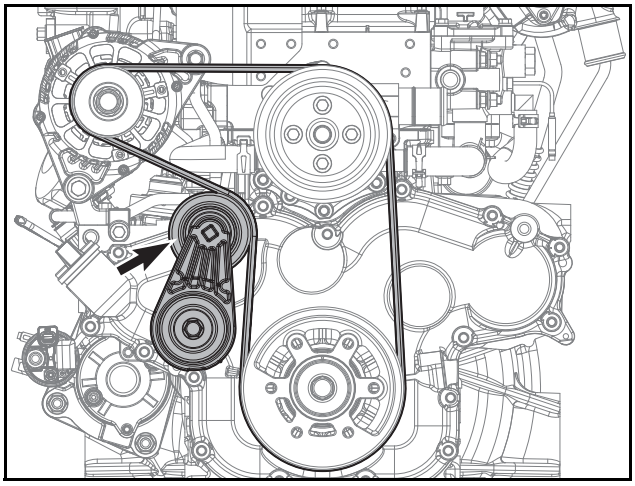

ED18190044

1) Wind a new belt around all pulleys except for the auto tensioner.
2) Turn the auto tensioner counterclockwise by using a quadrangular groove at the top of the auto tensioner pulley (Use a 10 mm x 10 mm quadrangular tool).

3) Wind the belt around the auto tensioner pulley by using a space generated by the rotation of the auto tensioner, and then naturally release the tensioner that has been pulled counterclockwise.

⚠ CAUTION

For checking and measuring the belt tension, refer to Belt Tension in Chapter 12 (Others/Driving Units).

Others

Engine Timing

The camshaft, oil pump, and high-pressure injection pump are driven by gear connection.

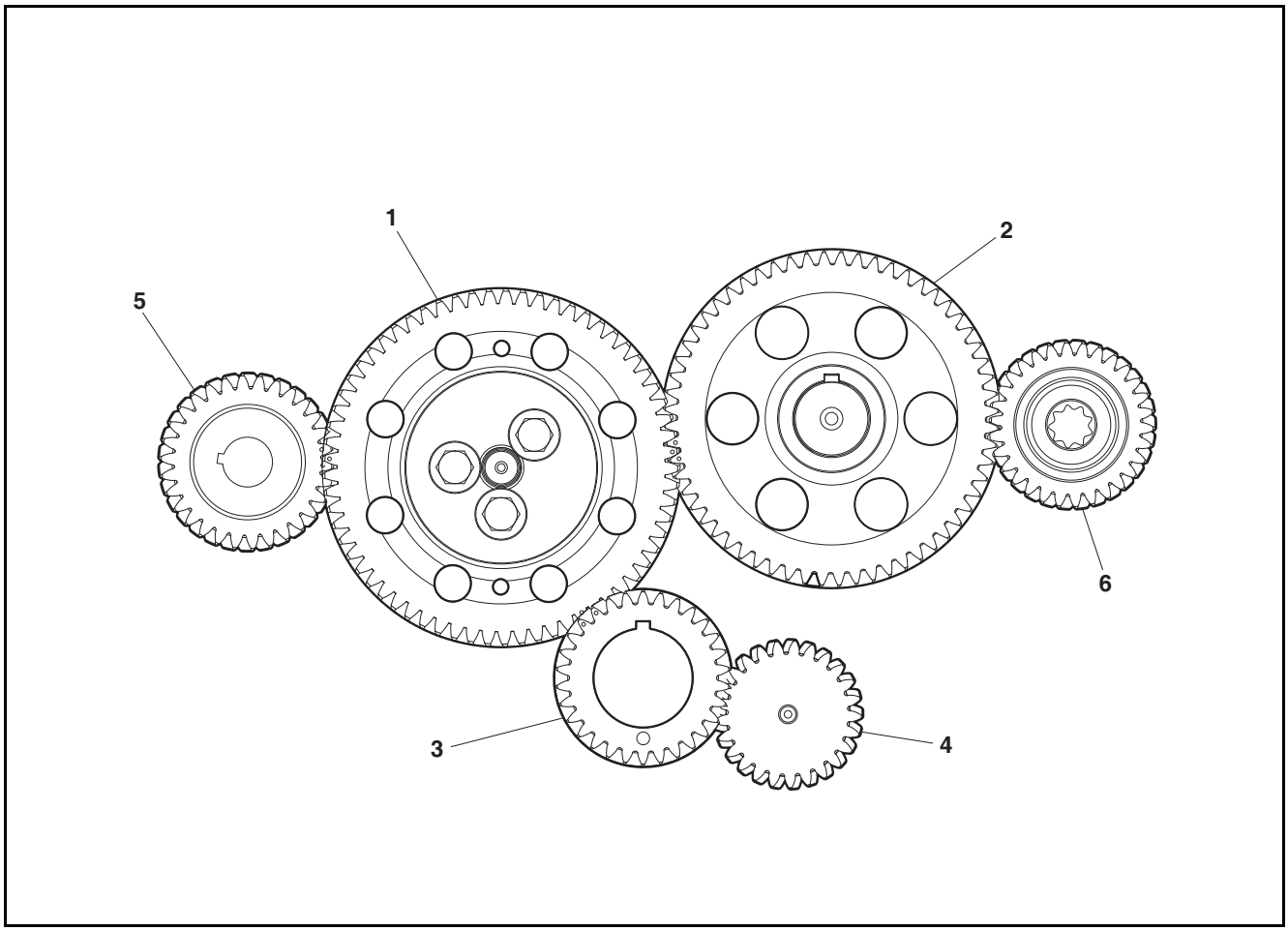

EDM02200046

1. Idle gear (gear: 65)
2. Camshaft gear (gear: 60)
3. Crankshaft gear (gear: 30)
4. Oil pump drive gear (gear: 25)
5. Injection pump gear (gear: 30)
6. PTO gear (gear: 30)

Adjustment of Engine Timing

1. Remove the timing gear case.
2. Align the engravings of gears.

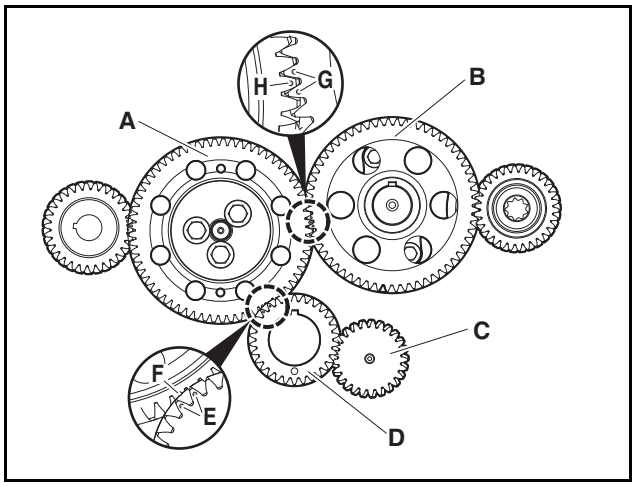

ED24190128

1) Position the crankshaft gear engraving mark (D) between the idle gear engravings (A).

Note) You can see one crankshaft gear engraving (F) and two idle gear engravings (E).

Note) Position the idle gear engraving (A) between the camshaft gear engravings (B).

Note) You can see one idle gear engraving (H) and two camshaft gear engravings (G).

3. Mount the timing gear case.

Check of Gear Backlash

1. Remove the timing gear case.
2. Check the gear backlash.

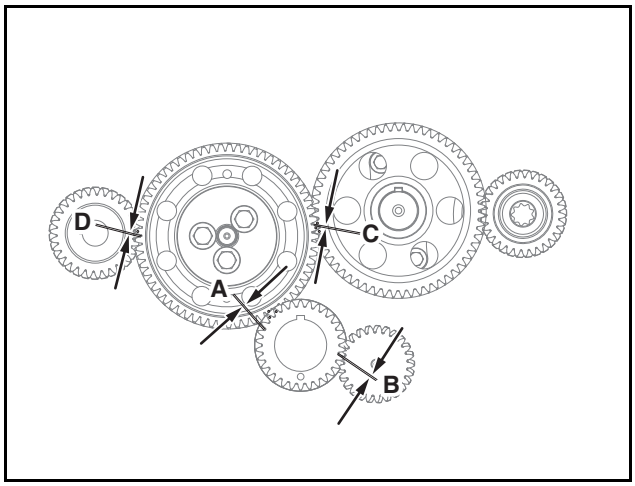

ED24190129

1) Check the gear backlash with the gap gauge.
2) The standard backlash between the idle gear (A) and the crankshaft gear is 0.087 ~ 0.200 mm.
3) The standard backlash between the oil pump drive gear and the crankshaft gear (B) is 0.060 ~ 0.259 mm.
4) The standard backlash between the idle gear and the camshaft gear (C) is 0.087 ~ 0.211 mm.
5) The standard backlash between the idle gear and the injection pump drive gear (D) is 0.087 ~ 0.200 mm.

Item	Specified Value
Backlash between the crankshaft gear and the idle gear	0.087 ~ 0.200 mm
Backlash between the crankshaft gear and oil pump drive gear	0.060 ~ 0.259 mm
Backlash between the idle gear and the camshaft gear	0.087 ~ 0.211 mm
Backlash between the idle gear and injection pump drive gear	0.087 ~ 0.200 mm

3. Mount the timing gear case.

Check of Gear Axial Offset

1. Remove the timing gear case.
2. Check the gear axial offset.

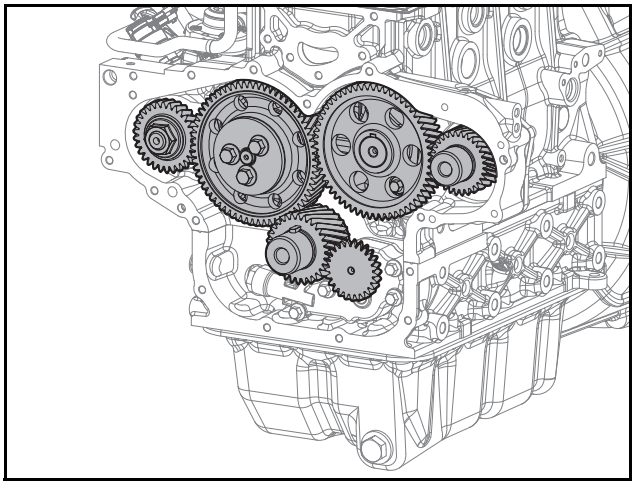

EDM01200078

1) Mount the dial gauge on the cylinder block.
2) Press the crankshaft gear into the cylinder block direction.
3) Perform the zero point adjustment of the dial gauge based on the crankshaft gear.
4) Pull the crankshaft gear and check the measured value of the dial gauge.

Note) The axial offset of the crankshaft gear is 0.100 ~ 0.300 mm.

5) Press the camshaft gear into the cylinder block direction.
6) Perform the zero point adjustment of the dial gauge based on the camshaft gear.

7) Pull the camshaft gear and check the measured value of the dial gauge.

Note) The axial offset of the camshaft gear is 0.1 ~ 0.2 mm.

8) Press the idle gear into the cylinder block direction.

9) Perform the zero point adjustment of the dial gauge based on the idle gear.

10) Pull the idle gear and manually measured value of the dial gauge.

Note) The axial offset of the idle gear is 0.1 ~ 0.2 mm.

Item	Specified Value
The axial offset of the crankshaft gear	0.100 ~ 0.300 mm
The axial offset of the camshaft gear	0.1 ~ 0.2 mm
The axial offset of the idle gear	0.1 ~ 0.2 mm

3. Mount the timing gear case.

13. Aftertreatment system

Exhaust gas reduction system (Stage-V) 281
General Instructions 281
Aftertreatment 282
Diesel Oxidation Catalyst (DOC) 282
Diesel Particulate Filter (DPF) 283
Cautions for Handling the DPF Assembly 288
Removing, Assembling and Disassembling the DOC/DPF Assembly 289
Exhaust gas reduction system (Tier-4 Final) 290
General Instructions 290
Aftertreatment 291
Diesel Oxidation Catalyst (DOC) 291
Removing, Assembling and Disassembling the DOC Assembly 292

Exhaust gas reduction system (Stage-V)

General Instructions

Hyundai Doosan Infracore engines are designed to satisfy Stage-V emissions regulations using a DOC (Diesel Oxidation Catalyst) and DPF (Diesel Particulate Filter). The DOC, an oxidation catalyst, serves to reduce HC and CO emissions by means of a catalyst, while the DPF collects particulate matter (PM) released by diesel engines.

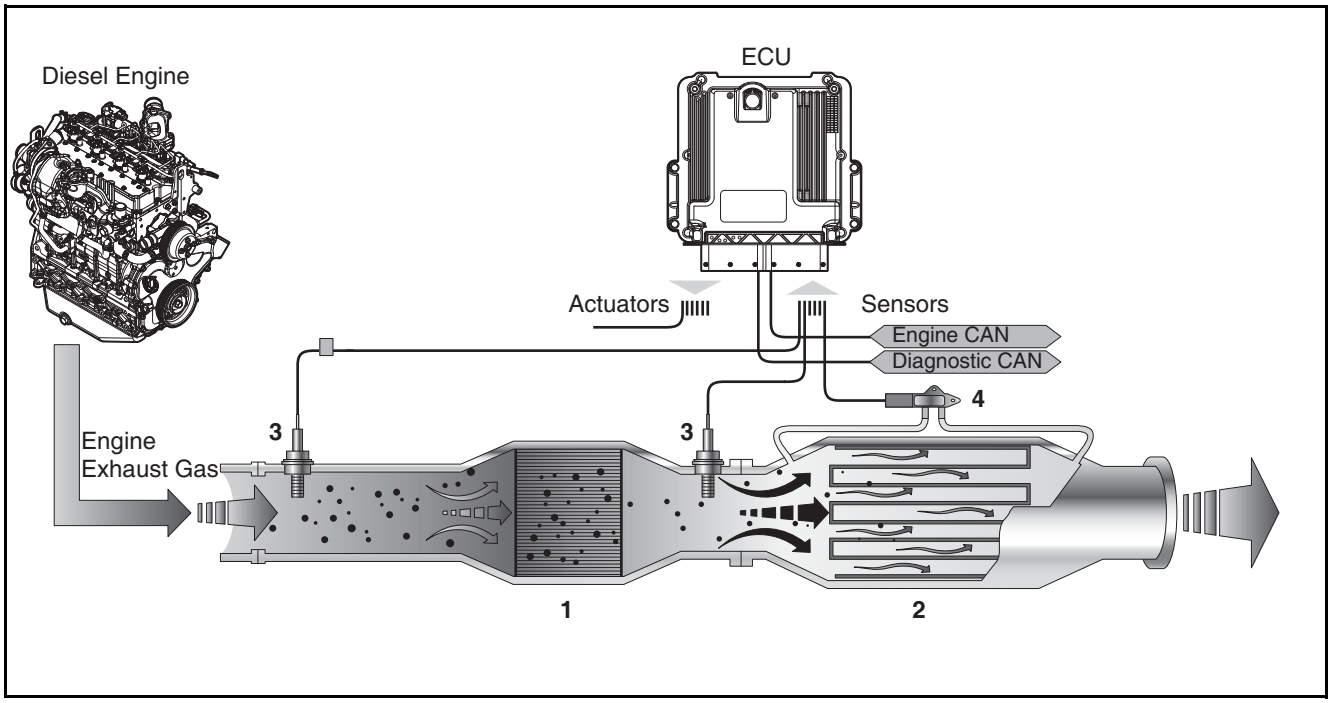

ED24190182

No.	Part Name	Quantity
1	DOC (Diesel Oxidation Catalyst)	1
2	DPF (Diesel Particulate Filter)	1
3	Temp. Sensor	4
4	DPF Delta P Sensor	1

Aftertreatment

The aftertreatment consists of a DOC and a DPF; the DOC containing a DOC (Diesel Oxidation Catalyst) and a DPF containing a DPF (Diesel Particulate Filter).

Diesel Oxidation Catalyst (DOC)

Overview

The DOC (Diesel Oxidation Catalyst) is a system which oxidizes and eliminates HC (hydrocarbons) and CO (carbon monoxide) emissions, producing H2O (water) and CO2 (carbon dioxide) in the process.

In Active Regeneration mode, it also increases the temperature of the DPF to help with the oxidation of HC (diesel) discharged through the exhaust manifold, as well as accelerating passive regeneration of particulate matter (PM) gathered in the DPF by converting NO (nitrogen monoxide) into NO2 (nitrogen dioxide).
As shown in the figure below, a temperature sensor is installed on the front of the DPF (Diesel Particulate Filter) to control the DOC temperature during active regeneration.

⚠ CAUTION

Do not reuse V-clamp and gasket.

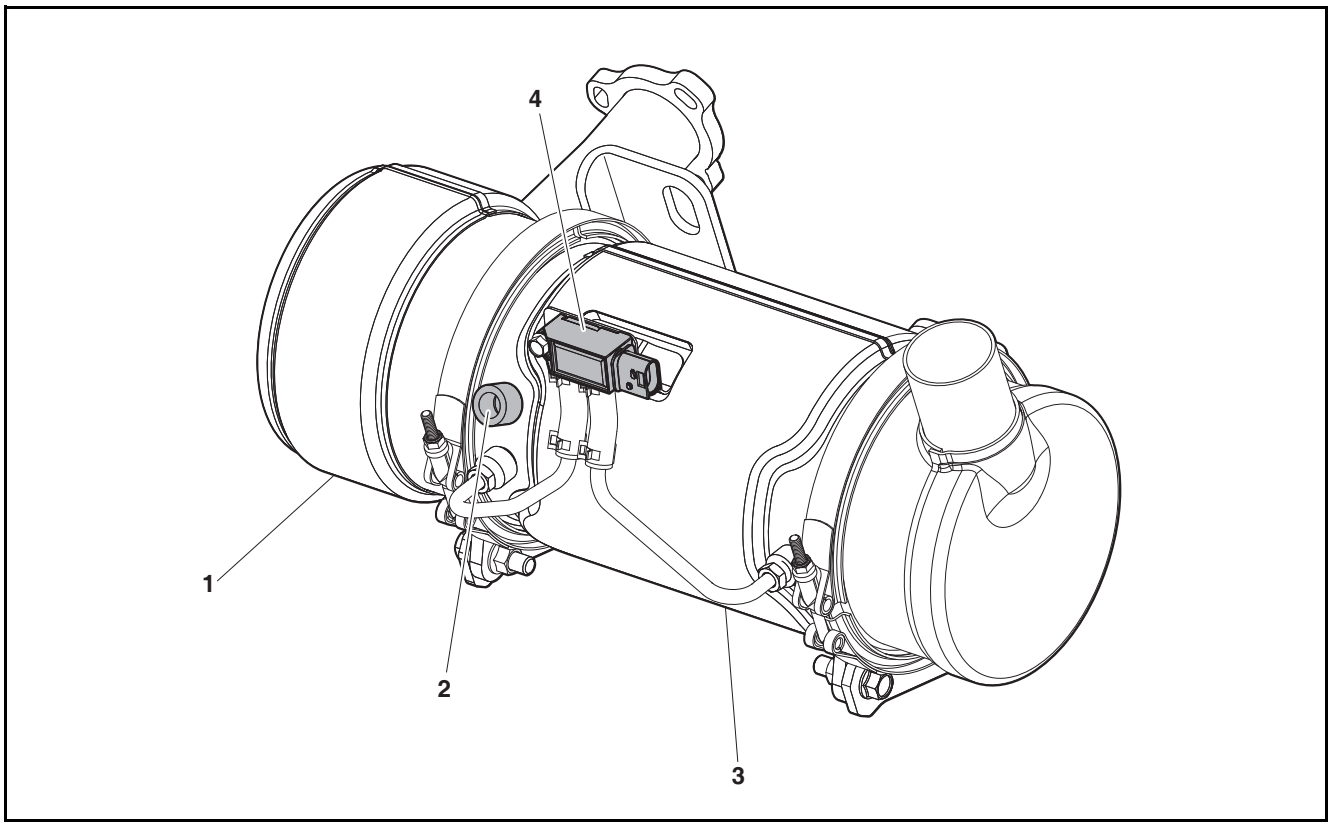

ED24190188

1. DOC
2. Temperature sensor
3. DPF
4. DPF delta P sensor

Diesel Particulate Filter (DPF)

Overview

The DPF (Diesel Particulate Filter) system serves to prevent particulate matter (PM) in emissions from being discharged into the air and consists of the DPF body, exhaust gas temperature sensor, and one differential pressure sensor. The DPF is composed of a porous wall capable of filtering out particulate matter. As exhaust gas passes through the DPF, particulate matter accumulates in the DPF, while the rest of the exhaust gas travels through the DPF to the SCR system. Following this, PM collected in the DPF is eliminated using a suitable regeneration method.

DPF Regeneration

The DPF serves to filter out soot, a contaminant found in the emissions of diesel engines. An excessive build-up of soot in the DPF leads to issues such as a drop in engine power due to increased back pressure in the engine, making it crucial to perform regeneration in order to eliminate PM in the DPF. The ECU (Engine Control Unit) calculates the amount of exhaust smoke using the signal from the DPF differential sensor, the vehicle operating time, the vehicle fuel consumption, and engine simulation data. Once this amount reaches a certain level, the ECU performs DPF regeneration. Regeneration—a process which involves burning accumulated PM—increases the temperature upstream of the DOC by means of adjustment of the engine throttle and near post injection, as well as raising the DPF temperature higher than the exhaust combustion temperature (580° or higher) to burn exhaust gas by means of far post injection. After DPF regeneration, only ash remains in the DPF. DPF regeneration comprises active regeneration while driving and forced regeneration performed by the driver.

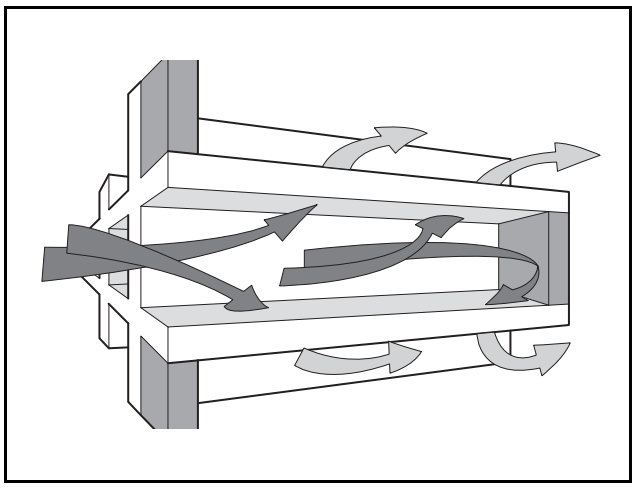

EJ9OM060

DPF Regeneration Lamp and Switch

1. HEST (High Exhaust System Temperature) Lamp
   This lamp notifies the driver when hot exhaust gas is being discharged from the engine during DPF regeneration. Be sure to keep the area around the exhaust manifold free of flammable materials.

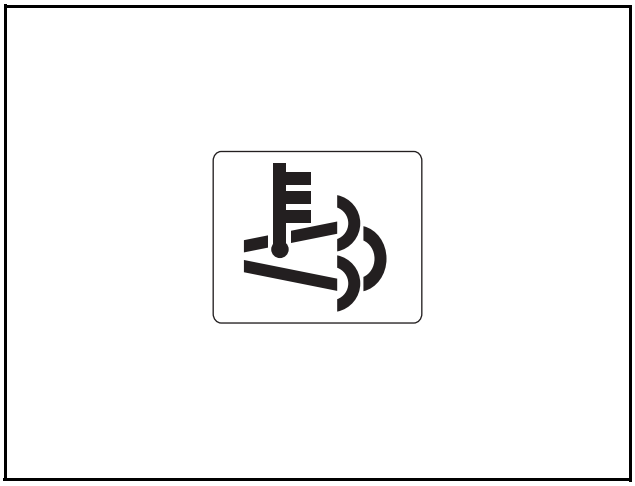

EJ9OM061

2. DPF Regeneration Lamp
   This lamp turns on either during regeneration or when regeneration is needed and turns off during active regeneration while driving if the soot level is less than 100%. The lamp appears as shown on the right when the driver disables regeneration.

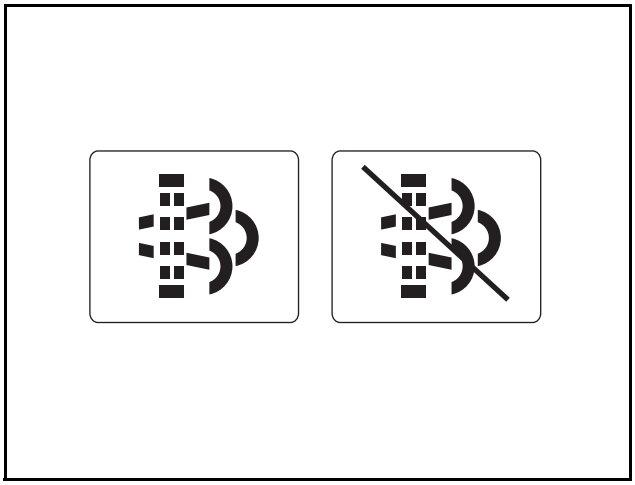

EJ9OM062

3. Forced Regeneration
   The driver can use these switches to initiate or disable forced regeneration. The switch above is the switch for forced regeneration and the switch below is the switch for disabling regeneration.

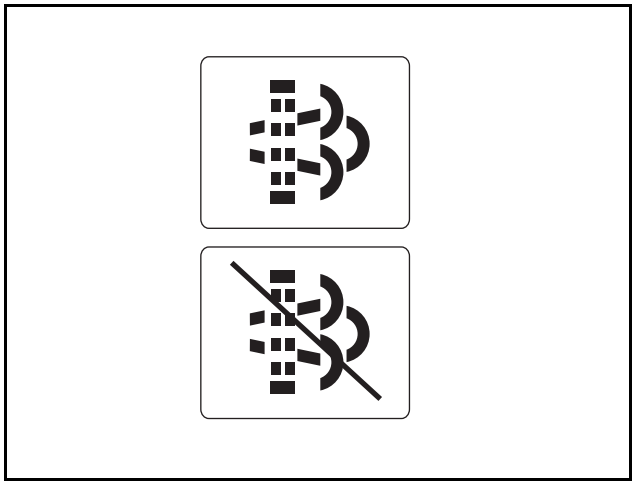

EJ9OM063

Stage V DPF Regeneration Strategy

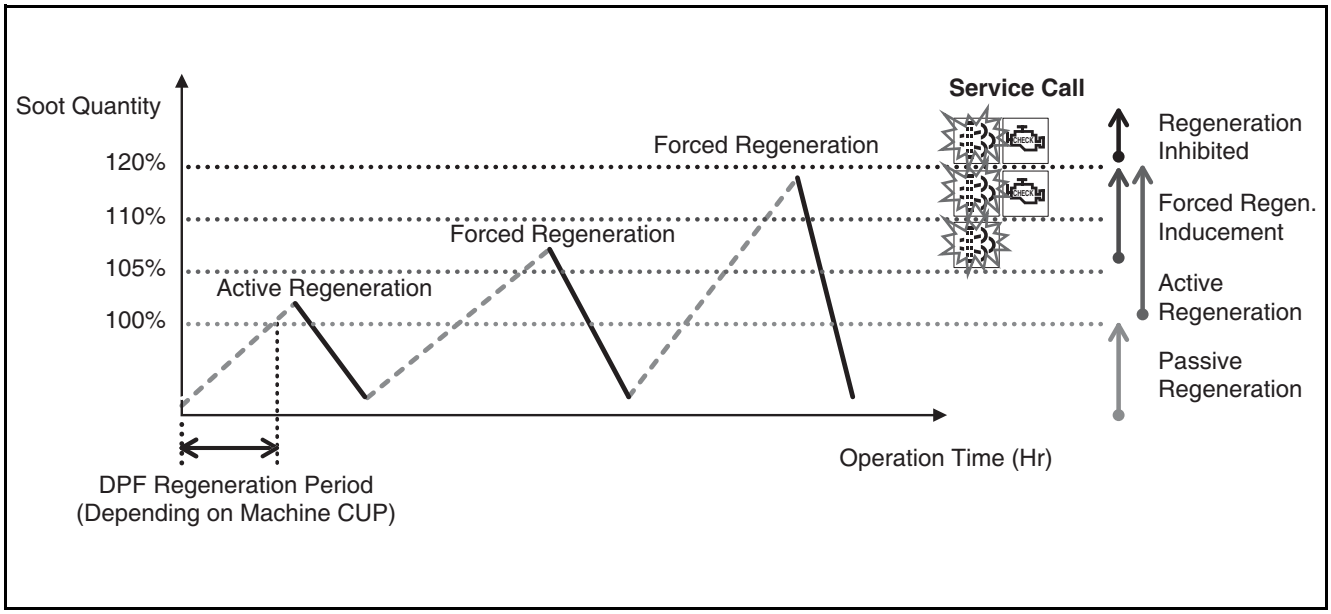

EDM02200009

Step	Soot Quantity	DPF Lamp*	Check Engine Lamp	Torque de-rate	Remark
1	Below 99%	Off	Off	No	• No action (Passive regeneration dependent on machine CUP)
2	100% ~ 105%	Off	Off	No	• Start active regen. With high temp. (580 ~ 640°C) during running
3	106% ~ 110%	Slow Blink	Off	No	• Forced regeneration inducement (Alarm only) • Start active regen. With high temp. (580 ~ 640°C) during running
4	111% ~ 120%	Slow Blink	On	Mild Torque de-rate	• Forced regeneration inducement (Torque de-rate) • Start active regen. With high temp. (580 ~ 640°C) during running
5	Above 121%	Fast Blink	Blink	Severe Torque de-rate	• Forced regeneration is disabled. • Service call is needed to service regeneration for machine operating properly.

- The regeneration lamp turns on when the DPF soot level exceeds 100%
- The regeneration lamp blinks when the DPF soot level exceeds 105%
- The regeneration lamp blinks slowly, the CE lamp turns on, and engine power is reduced (25%) when the DPF soot level exceeds 111%
- The regeneration lamp blinks quickly, the CE lamp turns on, and engine power is reduced (50%) when the DPF soot level exceeds 121%

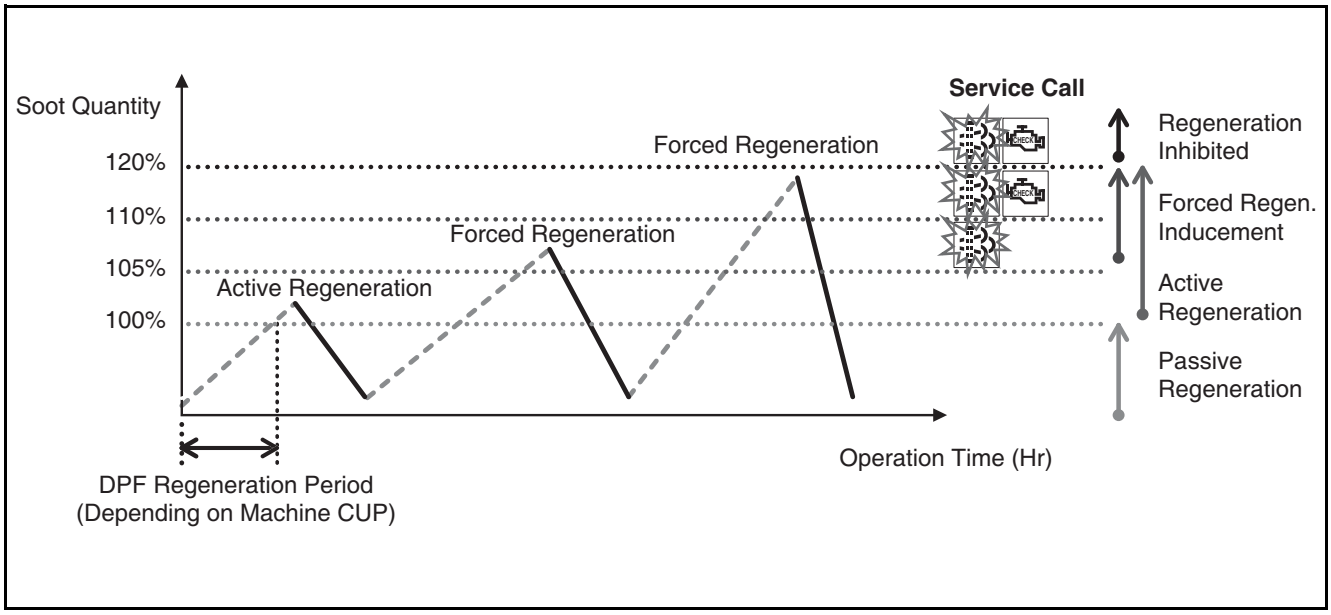

EDM02200009

Step	Soot Quantity	DPF Lamp*	Check Engine Lamp	Torque de-rate	Remark
1	Below 99%	Off	Off	No	• No action (Passive regeneration dependent on machine CUP)
2	100% ~ 105%	Off	Off	No	• Start active regen. With high temp. (580 ~ 640°C) during running
3	106% ~ 110%	Slow Blink	Off	No	• Forced regeneration inducement (Alarm only) • Start active regen. With high temp. (580 ~ 640°C) during running
4	111% ~ 120%	Slow Blink	On	Mild Torque de-rate	• Forced regeneration inducement (Torque de-rate) • Start active regen. With high temp. (580 ~ 640°C) during running
5	Above 121%	Fast Blink	Blink	Severe Torque de-rate	• Forced regeneration is disabled. • Service call is needed to service regeneration for machine operating properly.

DPF regeneration consists of active regeneration which occurs while driving and forced regeneration which is activated manually by the driver.

When the DPF soot level is less than 105%, active regeneration is activated automatically while driving.

However, at 105% or higher, the system notifies the driver that forced regeneration must be performed manually. At 120% or higher,

the engine warning lamp turns on, engine power drops 50%, and the driver must call for service.

- DPF soot level 105% or less: Active regeneration
- DPF soot level 105 ~ 120%: Forced regeneration + decrease in engine power
- DPF soot level 105 ~ 120%: Notify the driver that forced regeneration needs to be performed
- DPF soot level 120% or higher: Regeneration is not possible/must call for service to regenerate the DPF

DPF Regeneration Methods

Stage V engines are designed to perform passive regeneration of soot accumulated in the DPF even under normal exhaust conditions without needing to be initiated by the driver. The DPF regeneration modes are divided into the following five stages depending on the level of soot build-up in the DPF.

1) Soot level less than 100%: Normal operating conditions
2) Soot level 100 ~ 105%: Automatic regeneration during operation (Active Regeneration)
3) DPF soot level 106 ~ 110%: Forced regeneration is induced + Active regeneration is try to start.
   Notify the driver that forced regeneration needs to be performed.
4) DPF soot level 111 ~ 120%: Forced regeneration is induced + decrease in engine power and Active regeneration is try to start.
   Notify the driver that forced regeneration needs to be performed.
5) DPF soot level 120% or higher: Regeneration is not possible/must call for service to regenerate the DPF.

1. Regeneration mode during operation (Active regeneration)
   This regeneration mode is performed automatically by the ECU in order to regenerate the DPF when any of the following regeneration mode conditions are met. During regeneration, the regeneration lamp and HEST lamp turn on to warn the driver of the hot exhaust gas.
   At this time, normal operation is possible, although with caution for safety. Once regeneration is complete after 20 ~ 30 minutes, the regeneration lamp and HEST lamp turn off.

⚠ CAUTION

Turning the engine off during regeneration (i.e. while the HEST lamp is turned on) may have a severe impact on the DPF. Hence, do not turn the engine off while the regeneration lamp and HEST lamp are turned on except in emergencies.

- **When the soot level reaches the specified level in the simulation**

2. Forced regeneration mode
   This regeneration mode is performed by the driver with the vehicle stopped in the event that DPF regeneration is not performed while the vehicle is in operation. Forced regeneration (Active regeneration) may not be performed under the following operating conditions, so the driver must perform forced regeneration according to vehicle warnings as befits the circumstances.
   - Working repeatedly under a low load or driving at low speeds over short distances
   - Frequent idling

Conditions for forced regeneration

1) Coolant (engine oil) temperature: 40° or higher
2) Engine rpm: Idling
3) Parking brake engaged

Order of forced regeneration

1) Stop the vehicle. (Be sure to stop the vehicle in a safe place as the exhaust temperature will increase.)
2) Set the engine to an idling rpm.
3) Lower the safety lever.
4) Place the forced regeneration switch in the ON position.
5) The engine rpm increases from idling to high idle rpm (varies depending on the model) and regeneration begins.
6) Forced regeneration is performed for 30 ~ 40 minutes. (May take longer depending on the above-mentioned forced regeneration conditions). The regeneration lamp and HEST lamp turn on.
7) The engine rpm drops to an idling rpm.
8) The regeneration lamp and HEST lamp turn off.
9) Place the forced regeneration switch in the OFF position.
   * In the event that forced regeneration must be stopped due to an emergency, raise the safety lever. However, doing so has a severely adverse effect on DPF regeneration, so be sure to perform forced regeneration in a safe place with enough time to complete the process.

Aftertreatment System Inspection

Remove the temperature sensor and differential pressure sensor installed in the DPF, perform a visual inspection upstream and downstream of the DPF to check for any damage or melting, and take care not to damage the DPF.

1. If any soot is found during visual inspection, it is need to be replaced DPF.

Cautions for Handling the DPF Assembly

Please note the following while handling the DPF assembly.

1. The muffler weighs approx. 13 kg and the DOC/DPF are weak against impacts, so be careful not to damage them during removal.
2. When replacing the differential pressure sensor, take care to ensure that foreign matter does not enter the differential pressure sensor pipe. If foreign matter enters the pipe, a fault may occur due to a misreading of the differential pressure.
3. Take care to ensure that foreign matter does not enter the inlet/outlet after removing the DPF assembly. If foreign matter enters the system, it may damage the DOC/DPF.
4. The differential pressure sensor and temperature sensor are installed on the outside of the DPF assembly, so take care not to damage them during removal and installation.
5. Reusing gaskets may cause air leaks, so be sure to use new gaskets.
6. Air leaks in the exhaust system can lead to violation of emissions regulations, increased noise, and increased exhaust smoke, so be sure to tighten parts to their specified tightening torque.

Removing DPF Ash and Cleaning the DPF

During the regeneration of soot in the DPF, ash accumulates in the DPF. Once a certain amount of ash accumulates, engine performance and fuel efficiency are affected due to a build-up of back pressure in the exhaust system, so ash cleaning must be performed regularly to prevent any worsening of engine performance and fuel efficiency. The DPF part of the DPF assembly must be disassembled in order to clean out ash. Although the interval varies depending on the operating conditions, operating environment, and type of engine oil used, ash cleaning is usually performed every 5,000 hours of engine operating time under normal conditions.

⚠ CAUTION

1. **Be sure to use ultra-low-sulfur diesel (ULSD) to ensure normal performance of the DPF.**
2. **Be sure to use low ash engine lubricant oil (API CJ-4 (500hr interval) / API CK-4 (1,000hr interval)) to establish suitable DPF cleaning intervals.**

Removing, Assembling and Disassembling the DOC/DPF Assembly

1. Remove engine lifting hook (A) and bolt (B).
2. Temporary install T/C gasket (C) and nets (D), bracket bolts 20 mm (E) and 25 mm (F).
3. After all parts positioned, nuts and bolts has tighten as below sequence.
   - T/C nut (D): 2.2 kgf·m
   - Muffler bracket bolt (E, F): 4.4 kgf·m
4. Install and tighten exhaust gas temp. sensors (G).
   - Exhaust gas temp. sensors (G): 4.5 kgf·m

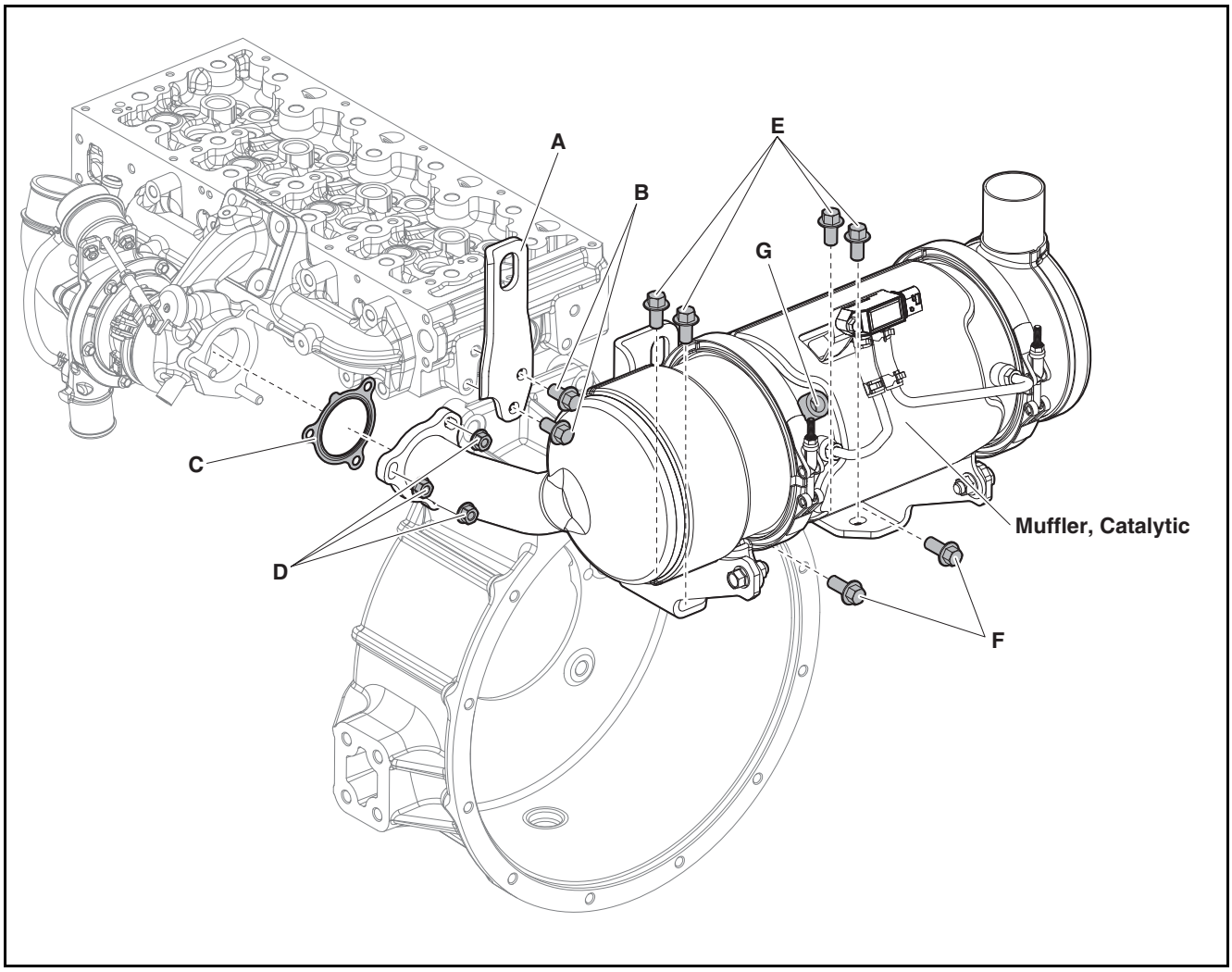

ED24190190

Exhaust gas reduction system (Tier-4 Final)

General Instructions

Hyundai Doosan Infracore engines are designed to satisfy Tier-4 Final emissions regulations using a DOC (Diesel Oxidation Catalyst).
The DOC, an oxidation catalyst, serves to reduce HC and CO emissions by means of a catalyst.

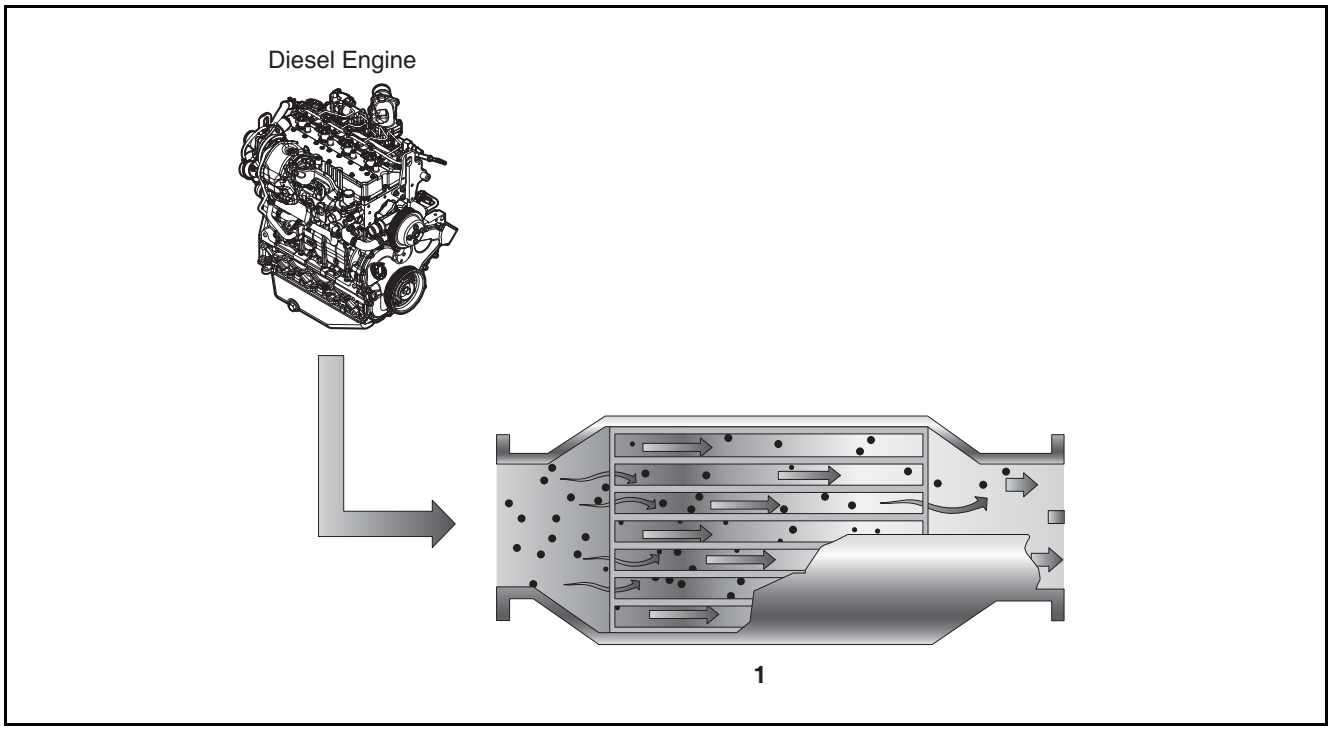

ED24190183

No.	Part Name	Quantity
1	Diesel Oxidation Catalyst	1

Aftertreatment

The aftertreatment consists of a DOC containing a DOC (Diesel Oxidation Catalyst).

Diesel Oxidation Catalyst (DOC)

Overview

The DOC (Diesel Oxidation Catalyst) is a system which oxidizes and eliminates HC (hydrocarbons) and CO (carbon monoxide) emissions, producing H2O (water) and CO2 (carbon dioxide) in the process.

Removal

Perform a visual inspection downstream of the DOC to check for any damage or melting.
Take care not to damage the DOC during removal.
(For more information on removal, assembly and disassembly, please refer to "Removing, Assembling and Disassembling the DOC Assembly.")

⚠ CAUTION

Do not reuse V-clamp and gasket.

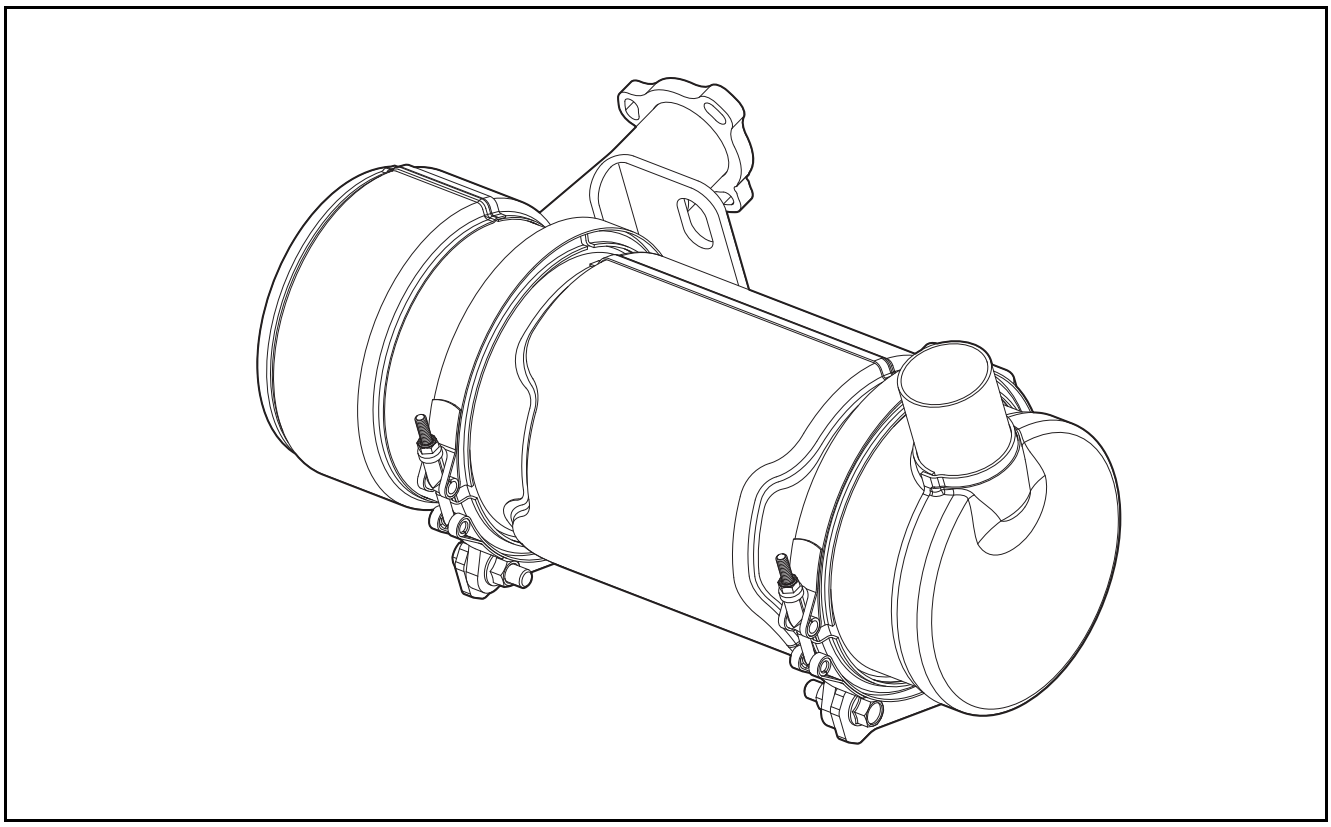

ED24190189

Removing, Assembling and Disassembling the DOC Assembly

1. Remove engine lifting hook (A) and bolt (B).
2. Temporary install T/C gasket (C) and nets (D), bracket bolts 20 mm (E) and 25 mm (F).
3. After all parts positioned, nuts and bolts has tighten as below sequence.
   - T/C nut (D): 2.2 kgf·m
   - Muffler bracket bolt (E, F): 4.4 kgf·m

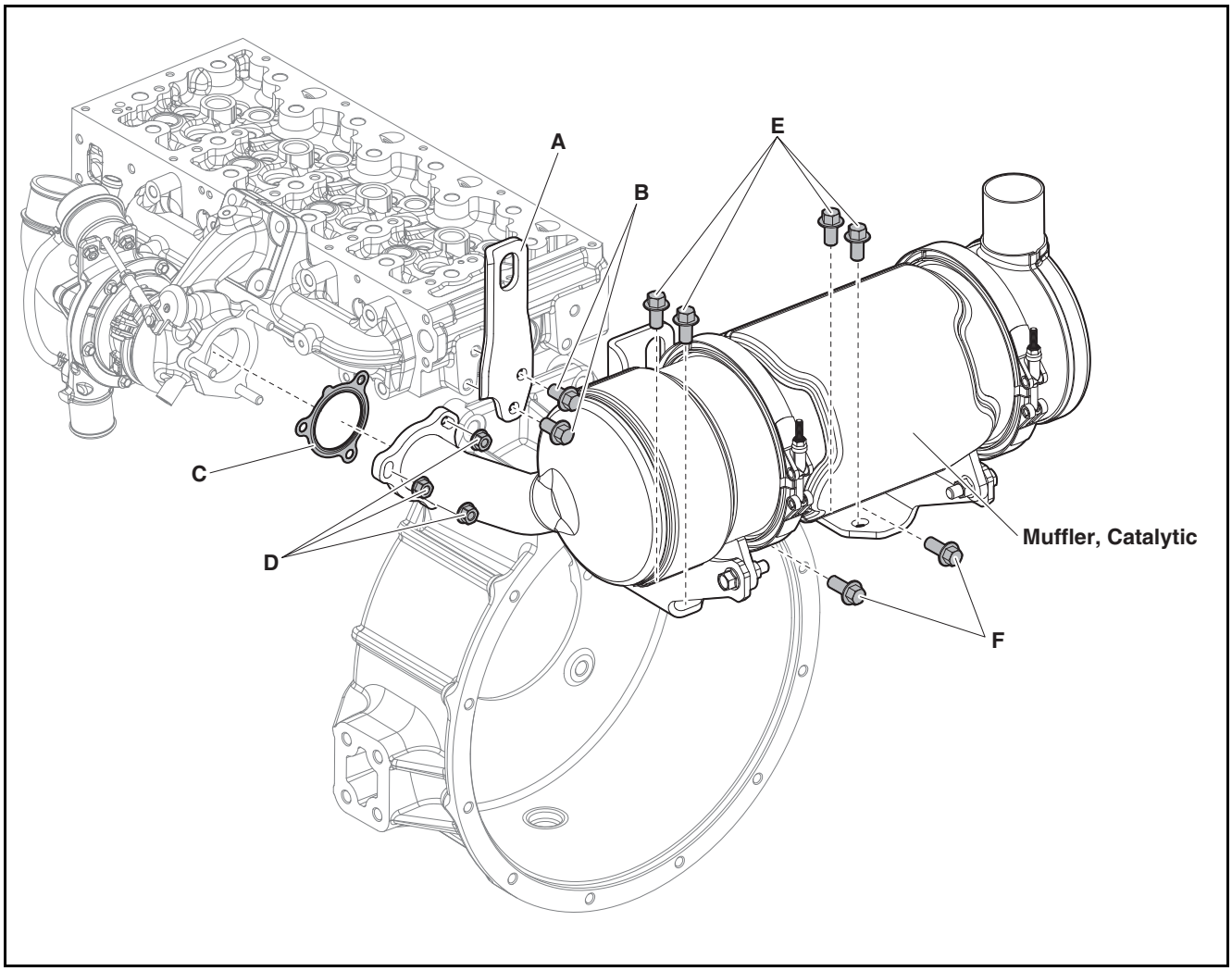

ED24190191

14. Accessory system

Radiator & Cooling fan 295
Genset & Power Unit Layout..... 295
Radiator & Cooling Fan System..... 296
Intake & CAC 303
Intake/Exhaust System 303
Engine mount 306

Radiator & Cooling fan

Genset & Power Unit Layout

Layout

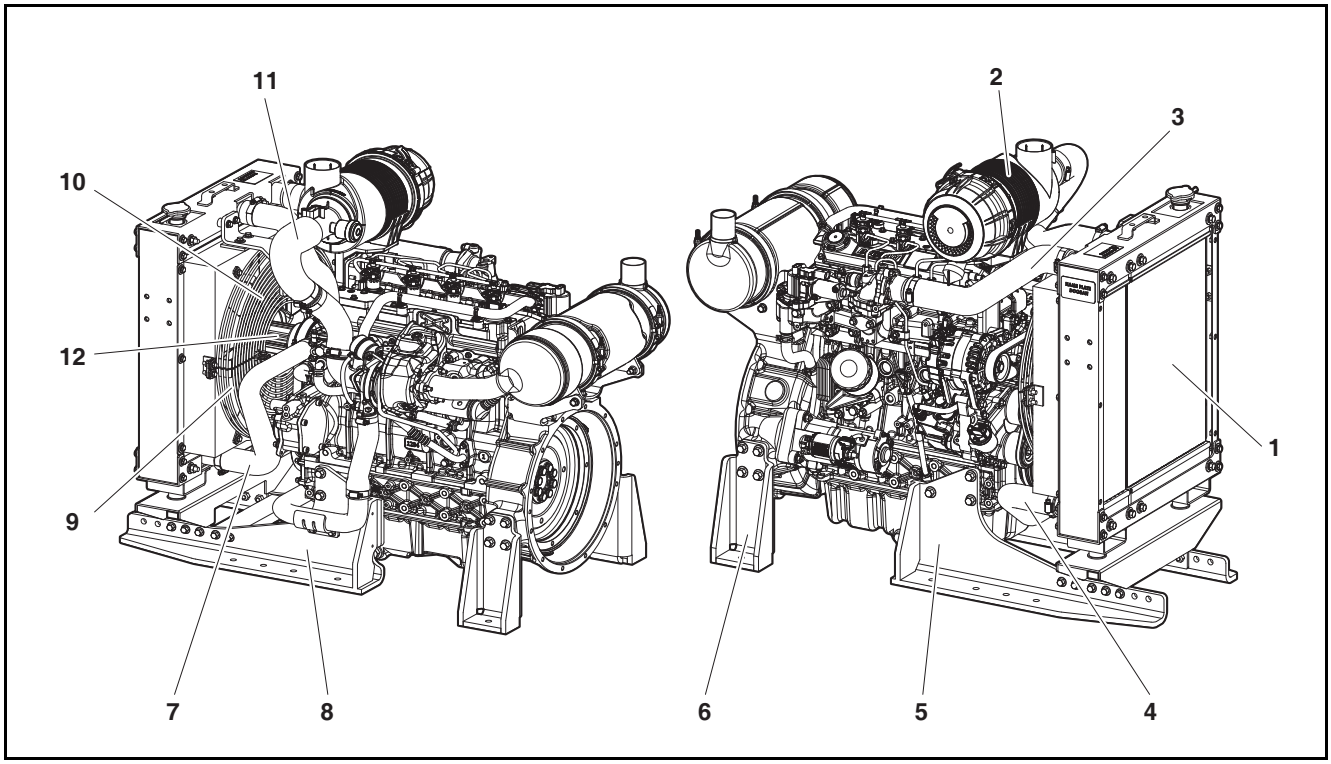

EDM02100037

1. Radiator
2. Air cleaner
3. CAC outlet hose
4, CAC inlet hose & pipe
5. Front engine mount
6. Rear engine mount
7. Water inlet hose
8. Engine mount support beam
9. Cooling fan
10. Fan guard
11. Intake hose & pipe
12. Fan flange

Radiator & Cooling Fan System

Radiator

General Information

The radiator is a heat exchanger which releases heat transmitted from inside the engine into the air.

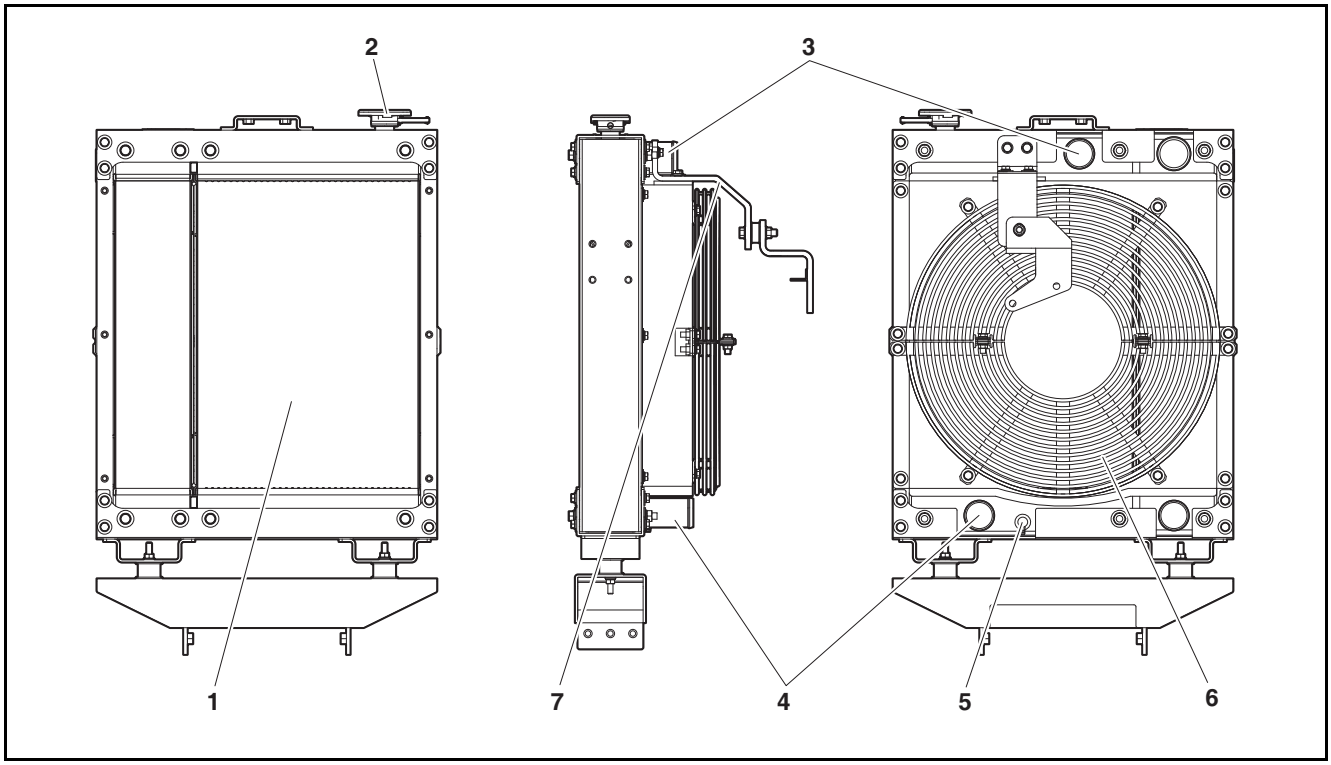

EDM02100039

1. Radiator
2. Radiator cap
3. Radiator inlet pipe
4. Radiator outlet pipe
5. Drain valve
6. Fan guard
7. Top support bracket

1. Radiator body.
2. A coolant inlet which maintains a certain level of coolant pressure by means of a pressure/vacuum valve installed in the radiator cap.
3. The radiator inlet pipe acts as an inlet for coolant flowing from the thermostat.
4. The radiator outlet lowers the temperature of the coolant and sends it back to the engine.
5. A coolant drain valve used during service and maintenance.
6. Supplies and discharges air from the cooling fan efficiently and protects the cooling fan.
7. Radiator upper support.

Failure Diagnosis

Phenomenon	Causes	Troubleshooting
Coolant leakage	Damaged radiator core	Replace the radiator
	Defective radiator cap	Replace the radiator cap
	Damaged drain valve	Replace the drain valve
Overheating	Clogged radiator	Replace the radiator and coolant
	Damaged fan shroud	Repair or replace the shroud
	Poor coolant quality	Replace with the specified coolant
	Poor air drainage	Open the radiator cap and idle the engine to bleed the air
	Defective radiator cap	Replace the radiator cap
	Insufficient coolant	Add coolant
Overflow	Defective head gasket or deformed head	Check the head gasket and head

How to Maintain the Radiator

1. Cautions for engine operation.

1) Observe the following when starting, operating and stopping the engine.

Item	Cautions	Reasons
Starting the engine	Check the coolant level	If the level is too low or too high, the engine may overheat or the reservoir tank may overflow
	Check for leaks	Incorrect pressure levels may cause overheating
Operating	Check the coolant temperature	Incorrect coolant temperatures may cause overheating
Stopping the engine	Check the coolant level	If the level is too low or too high, the engine may overheat or the reservoir tank may overflow
	Radiator cap pressure test (0.9 ±0.15)	Incorrect pressure levels may cause overheating

Radiator Disassembly

1. Drain the coolant.

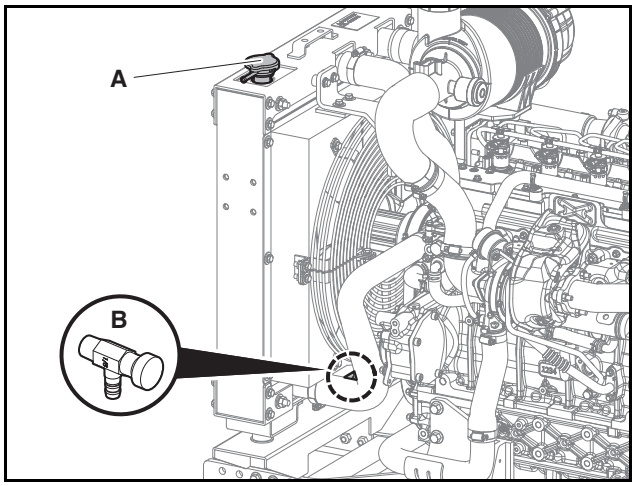

EDM02100041

1) Open the radiator cap (A).

⚠ CAUTION

Opening the cap while it is hot may cause burns on your hands or face. Hence, wait until the coolant has cooled down; then, cover the cap with a cloth and open the cap slightly to release any excess pressure before opening the cap fully.

2) Open the drain valve (B): open the valve to drain the coolant.
2. Remove the fan guard.

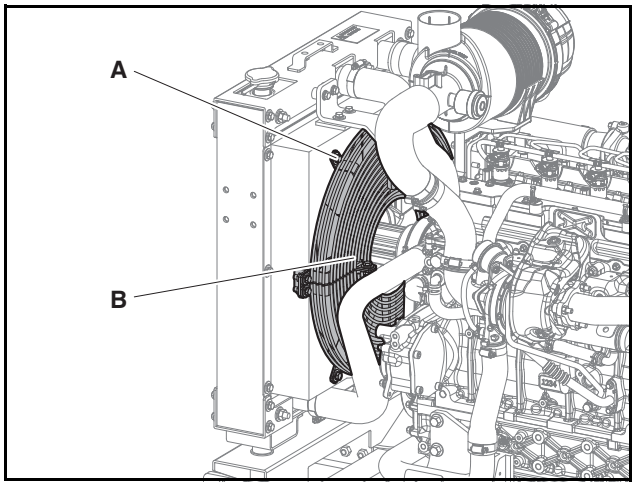

EDM02100043

1) Remove the six bolts (A) (six bolts at 60° angles).

Component	Tightening Torque
Fan guard bolt	2.2 ±0.22 kgf·m

2) Remove the upper and lower fan guards (B).

3. Remove the radiator in & out hoses.

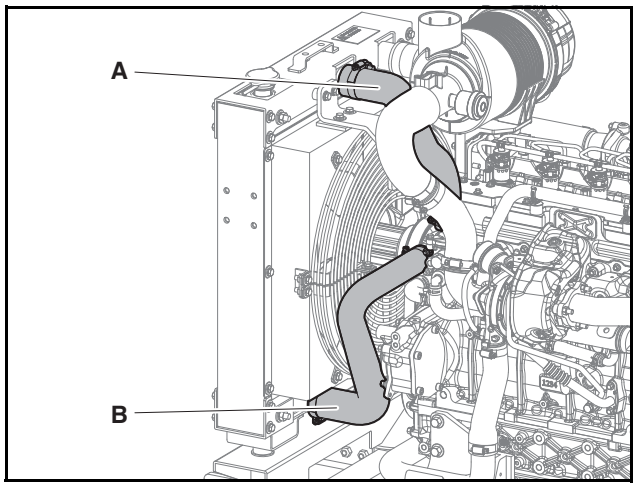

EDM02100045

1) Remove the clamp bolts on the radiator inlet hose (A); then, remove the hose.
2) Remove the clamp bolts on the radiator outlet hose (B); then, remove the hose.

Component	Tightening Torque
Hose clamp	0.6 ±0.09 kgf·m

4. Remove the CAC inlet & outlet hoses

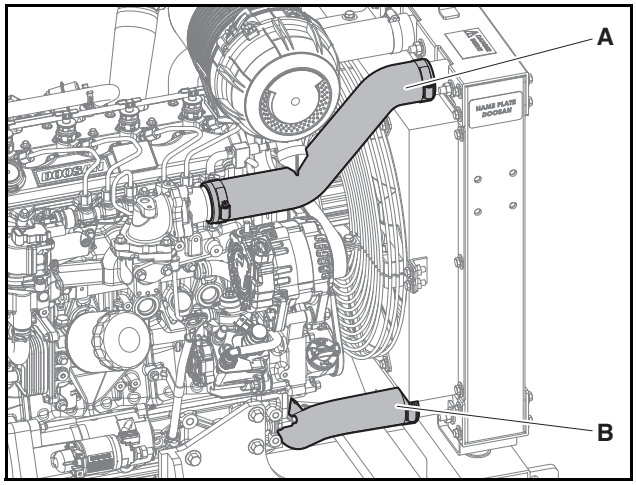

EDM02100031

1) Remove the clamp bolts on the CAC outlet pipe (A); then, remove the hose.
2) Remove the clamp bolts on the CAC inlet hose (B); then, remove the hose.

Component	Tightening Torque
Hose clamp	0.6 ±0.09 kgf·m

5. Remove the radiator bolts.

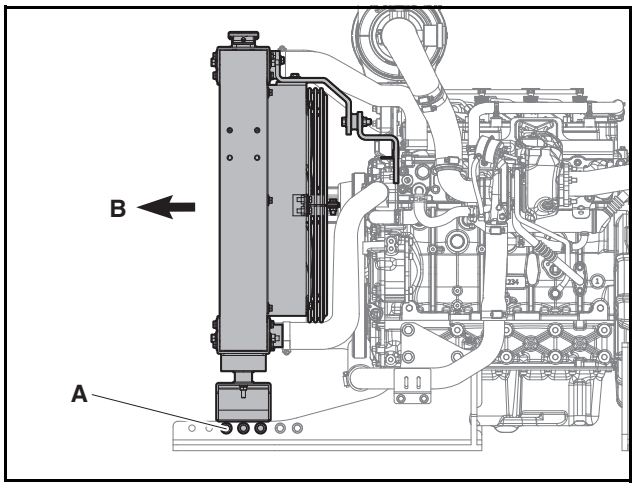

EDM02100049

1) Remove the radiator module mounting six bolts (A).

Component	Tightening Torque
Radiator module mounting bolt	4.4 ±0.44 kgf·m

2) Remove the radiator in the direction of (B).

Assembly

Assemble in the reverse order of disassembly.

1) Keep the radiator at a horizontal level of 0 ±0.5° while tightening the bolts.
2) Assemble in the order of A, B, C.

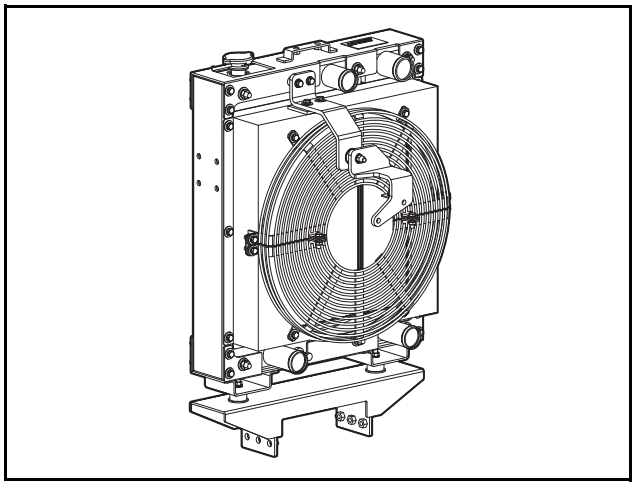

EDM02100032

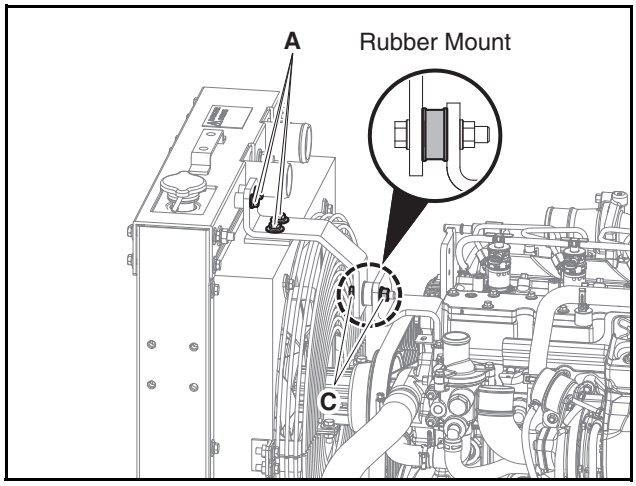

EDM02100034

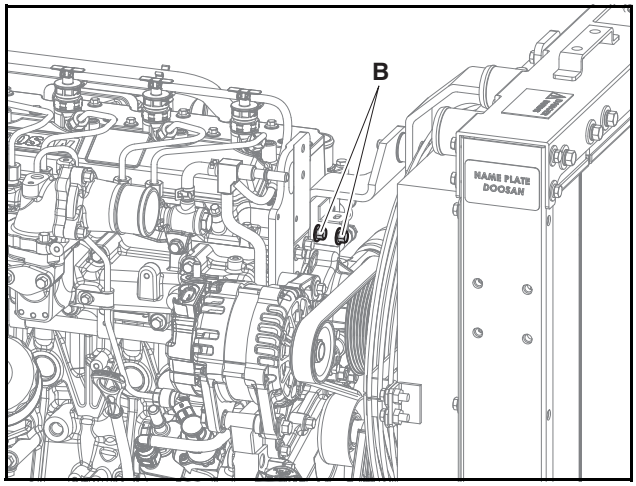

EDM02100047

- A, B tightening torque: 2.2 ±0.22 kgf·m
- C Tightening torque: 6.2 ±0.62 kgf·m
- When assembling B and C, assemble so that the Rubber Mount of A is not twisted.

Rubber Mount

During assembly of Radiator Assy, when assembling A, assemble the Rubber Mount (B) so that it does not twist or bend.

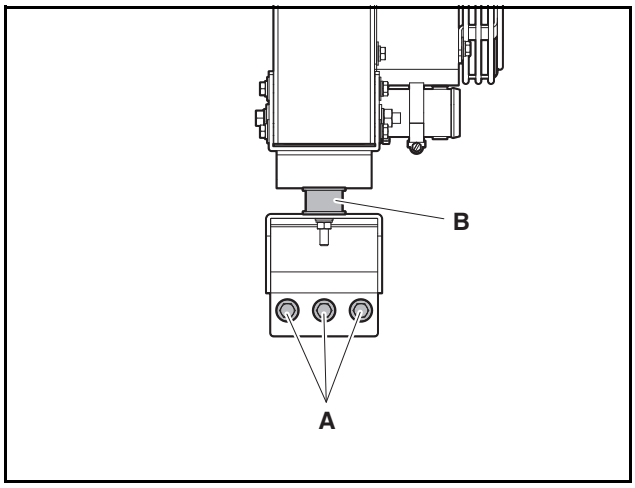

EDM02100051

Radiator Check

1. Routine checks and repairs: radiator performance is determined by the state of maintenance of the engine. Hence, make sure to perform inspections regularly and check the following.

1) Check the coolant: check the level and condition of the coolant.
   If the specific gravity of the coolant exceeds the specified amount or the color has changed, replace the coolant. Deteriorated coolant may cause overheating, corrosion or damage due to freezing.
2) Coolant leakage: use a flashlight to check for any coolant leakage on the ground. Coolant leakage may cause overheating.
3) Air pockets: if the air in the cooling system is not discharged properly, the engine may overheat even if the reservoir tank has enough coolant.
   After opening the radiator cap, idle the engine sufficiently to bleed the air in the system; then, add coolant.
4) Fan shroud: if the exterior of the shroud is defective, the worsened airflow may lead to overheating.
   Repair or replace the part.
5) Clogged radiator fins: if the fins are clogged with dust, the restricted airflow may cause overheating.
   Clean the radiator with a radiator cleaning tool.
6) Clogged radiator: if there is no airflow after preheating the engine, check whether the radiator is clogged or the thermostat is defective.
7) Check the radiator cap: inspect the radiator cap seal and valve to make sure that they are working correctly.
   A defective radiator cap may cause overheating.
8) Horizontal balance of the radiator: check the horizontal balance of the radiator.
   An excessive incline may damage the radiator due to interference with the fan.

Cooling Fan

General Information

The cooling fan is a device which creates a forced airflow to enhance the cooling efficiency of the radiator and CAC.

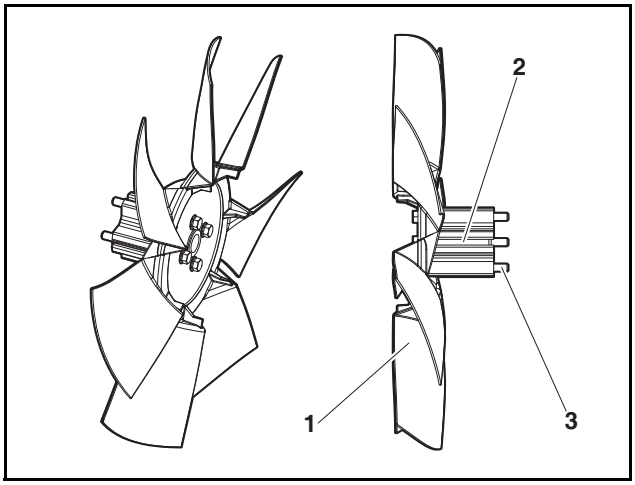

ED24190207

1. Cooling fan
2. Fan flange
3. Bolt

1. Creates airflow.
2. A spacer added to position the fan.
3. A bolt which connects the fan and fan flange.

Failure Diagnosis

Phenomenon	Causes	Troubleshooting
Noise and vibrations	Poor air suction due to dust or other obstructions	Clean the radiator core or improve the airflow at the front and back of the radiator
	Low speed	Adjust the belt tension
	Improperly secured fan	Check the bolt torque
	Incorrect rotating direction	Assemble in the correct direction
Broken	Poor air suction due to dust or other obstructions	Clean the radiator core or improve the airflow at the front and back of the radiator
	Damage due to foreign matter	Remove the foreign matter and replace the fan

How to Maintain the Cooling Fan

1. Cautions for engine operation.

1) Observe the following when starting, operating and stopping the engine.

Item	Cautions	Reasons
Starting the engine	Check the front and back of the radiator module	Damage or poor cooling performance due to clogging
	Check the blades for damage	Blade damage causes poor cooling and additional damage to nearby parts
Operating	Check for noise and vibrations	Blade damage causes poor cooling and additional damage to nearby parts
Stopping the engine	Check the blades for damage	Blade damage causes poor cooling and additional damage to nearby parts

Cooling Fan Disassembly

1. Remove the radiator (reuse the figure above).
2. Remove the cooling fan.

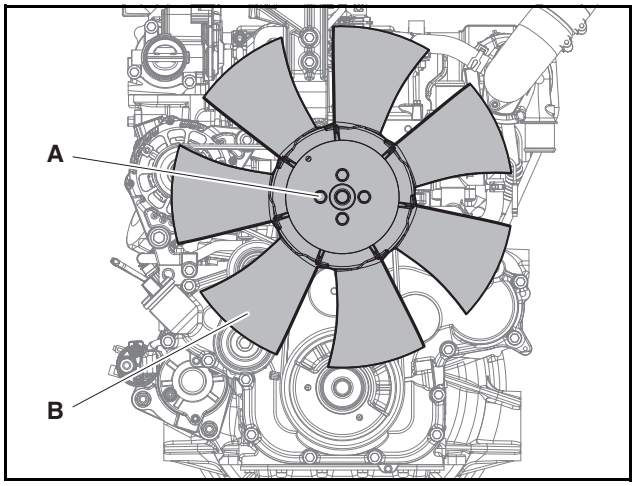

EDM01200067

1) Remove the four bolts (A).

Component	Tightening Torque
Cooling fan bolt	2.4 ±0.24 kgf·m

2) Remove the cooling fan (B).
3. Remove the fan flange.

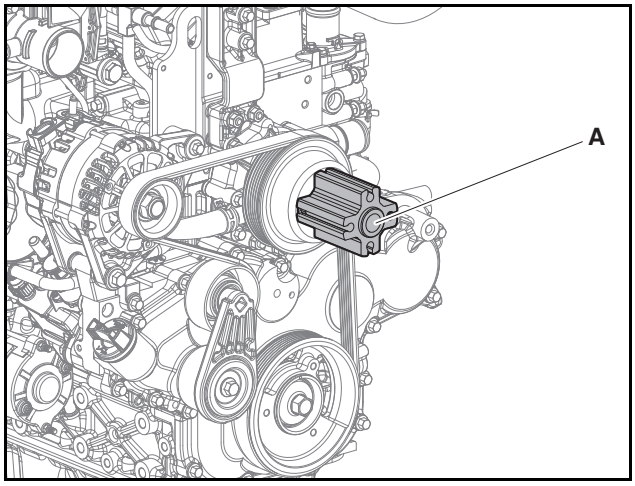

EDM01200068

1) Remove the fan flange (A).

Assembly

Assemble in the reverse order of disassembly.

Cooling Fan Check

1. Routine checks and repairs: cooling fan performance is determined by the state of maintenance of the engine. Hence, make sure to perform inspections regularly and check the following.

1) Noise and vibrations: check for noise and vibrations while operating the machine.
   Noise and vibrations may be caused by loose bolts, an excessively clogged radiator, etc. and may lead to overheating and damage.
2) Visual inspection of blades: check the blades visually before running the engine.
   Defective blades may cause overheating and severe damage to nearby parts.

Intake & CAC

Intake/Exhaust System

Air Cleaner

General Information

A device which removes foreign matter from the air delivered to the system.

Air filter types and components (options).

1. Cummins air filter.
- Model name: OA 600
- Provided
  - Mounting bracket
  - Air filter hose
  - Inlet air temp adapter

Air Filter Mounting (OA 600)

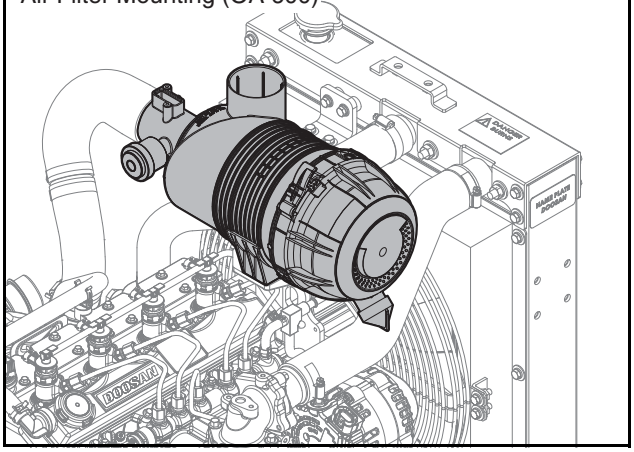

EDM02100021

2. Donaldson air filter.
- Model name: D080026, D080020
- No integrated MAF HSG
- Provided
  - Hose between A/filter and MAF HSG
  - Inlet air temp HSG

Donaldson Filter (D080026)

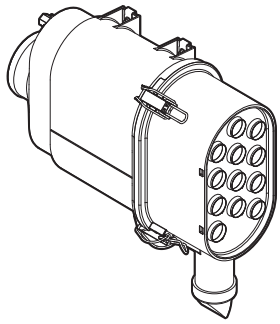

ED24190217

Donaldson Filter (D080020)

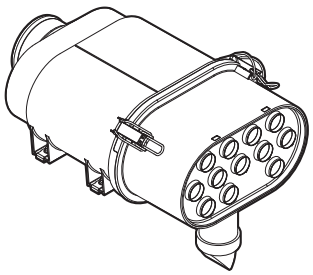

ED24190218

Disassembly of Air Cleaner

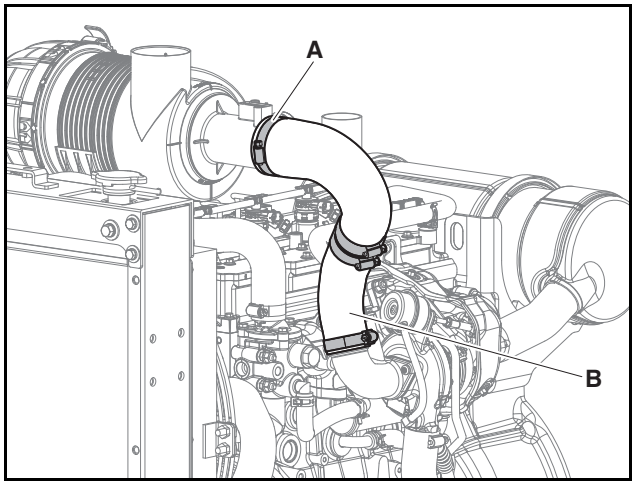

EDM02100023

1. Remove the clamps (A) connected to the hose (B).
2. Remove the air filter and disconnect the hose and fitting pipe.

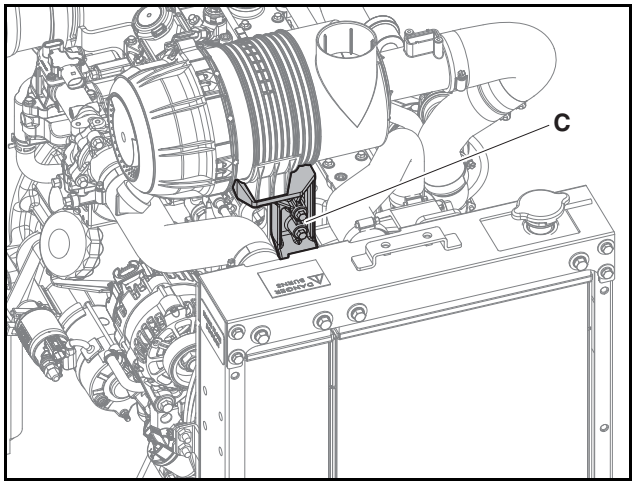

EDM02100024

3. Remove all bolts and nuts from the air filter bracket (C).
4. Remove the air filter.

Assembly of Air Cleaner

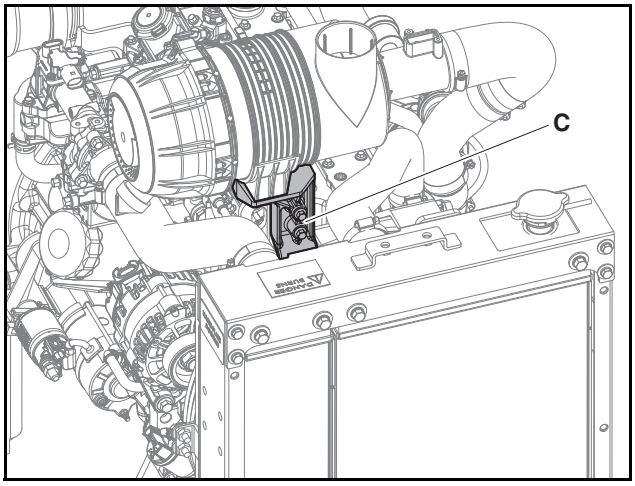

EDM02100024

1. Tighten all bolts and nuts on the air filter bracket (C).
2. Connect the air filter, hose and fitting pipe.

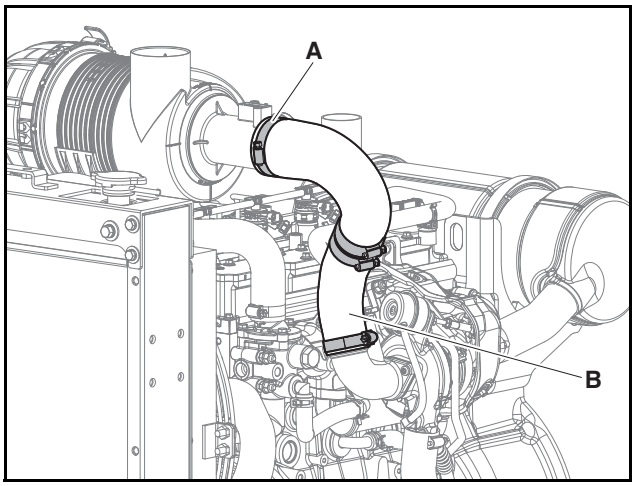

EDM02100023

3. Tighten the clamps (A) to the hose (B) connection.

⚠ CAUTION

Do not reuse clamps; replace them with new ones.

Air Hose

Disassembly of Air Hose

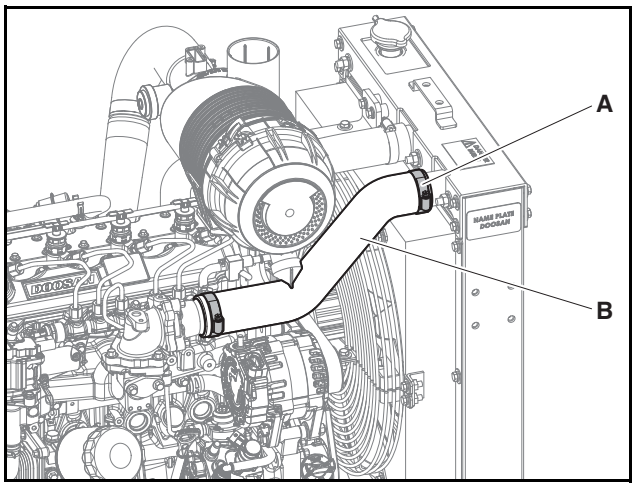

EDM02100028

1. Remove the clamps (A) connected to the hose (B).
2. Disconnect the air hose.

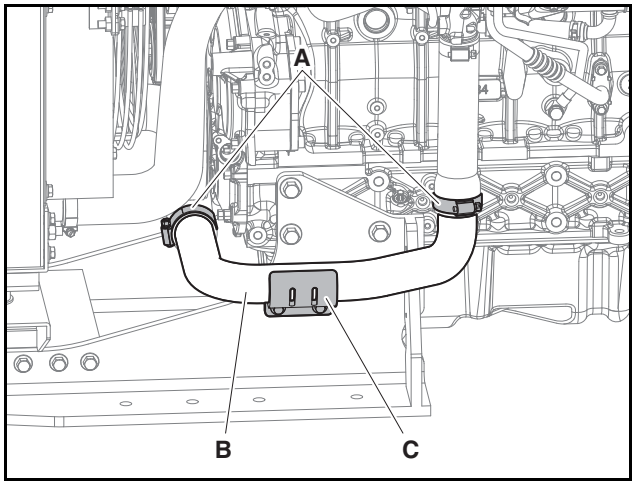

EDM02100026

1. Remove the clamps (A) connected to the hose (B).
2. Disconnect the air hose.
3. Remove bolts and nuts from the bracket (C).

Assembly of Air Hose

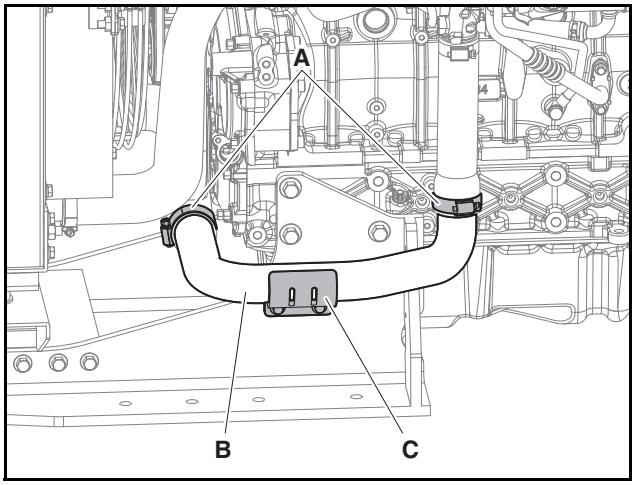

EDM02100026

1. Tighten all bolts and nuts on the air hose bracket (C).
2. Connect the air hose.
3. Tighten the clamps (A) on the hose (B) connection.

⚠ CAUTION

Do not reuse clamps; replace them with new ones.

Engine mount

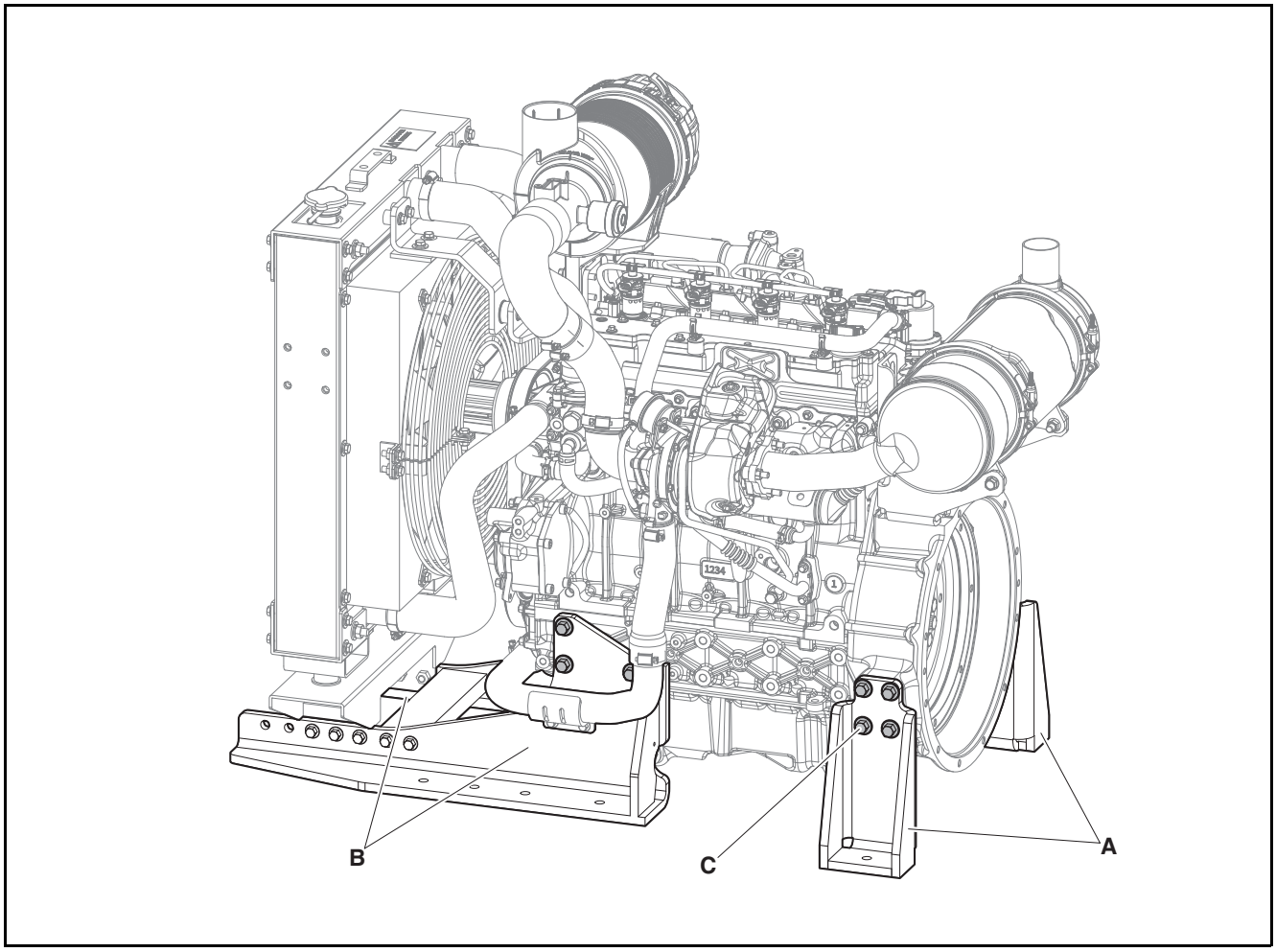

EDM02100019

1. Removal and tightening of brackets.
- A: Rear mount bracket
- B: Front mount bracket

⚠ CAUTION

Make sure the brackets are horizontal while tightening them.

2. Bolt torque: 10.5 ±1.05 kgf·m
- C: 14 bolts (rear & front)